TENDER NO: 31G/2026/27

TENDER DESCRIPTION: THE SUPPLY, INSTALLATION AND REPAIR OF ALUMINIUM SWOPPABLE BODIES, CANOPIES AND STORAGE COMPARTMENTS IN CITY OF CAPE TOWN VEHICLES

CONTRACT PERIOD: A PERIOD THIRTY-SIX (36) MONTHS FROM DATE OF COMMENCEMENT OF CONTRACT

CLOSING DATE	**29 January 2027**
CLOSING TIME	**10:00 am**
TENDER BOX NUMBER	**207**
TENDER FEE	**R 200**

Non – refundable tender fee payable to the City of Cape Town (CCT) for a hard copy of the tender document. This fee is not applicable to website downloads of the tender document**.**

TENDERER	
NAME of Company/Close Corporation or Partnership / Joint Venture/ Consortium or Sole Proprietor /Individual (hereinafter the "Tenderer")	
TRADING AS (if different from above)	
Registration number of Tenderer	
Physical address and chosen domicilium citandi et executandi of Tenderer	

NATURE OF TENDER OFFER (please indicate below)	
Main Offer (see clause 2.2.11.1)	
Alternative Offer (see clause 2.2.11.1)	

TENDER SERIAL NO.:
SIGNATURES OF CCT OFFICIALS AT TENDER OPENING
1
2
3

TABLE OF CONTENTS

THE TENDER 3

T.1 GENERAL TENDER INFORMATION 3
T.2 CONDITIONS OF TENDER 4
2.1 General 4
2.2 Tenderer's obligations 8
2.3 The CCT's undertakings 15

THE CONTRACT 22

C.1 DETAILS OF TENDERER/SUPPLIER 23
C.2 FORM OF OFFER AND ACCEPTANCE 24
C.2.1 OFFER (TO BE COMPLETED BY THE TENDERER AS PART OF TENDER SUBMISSION) 24
C.2.2 ACCEPTANCE (TO BE COMPLETED BY THE CCT) 25
C.2.3 SCHEDULE OF DEVIATIONS (TO BE COMPLETED BY THE CCT UPON ACCEPTANCE) 26
C.2.4 CONFIRMATION OF RECEIPT (TO BE COMPLETED BY SUPPLIER UPON ACCEPTANCE) 27
C.3 OCCUPATIONAL HEALTH AND SAFETY AGREEMENT 28
C.4 PRICE SCHEDULE 29
C.5 SPECIFICATIONS CATEGORY 1 34
C.5 SPECIFICATIONS CATEGORY 2 45
C.5 SPECIFICATIONS REPAIR AND REFURBISHMENT OF CAT 1 & CAT 2 ITEMS 76
C.5 GENERAL TECHNICAL REQUIREMENTS APPLICABLE 82
C.6 SPECIAL CONDITIONS OF CONTRACT 85
C.7 GENERAL CONDITIONS OF CONTRACT 98
C.8 ANNEXURES 108
ANNEXURE A – PRO FORMA INSURANCE BROKER'S WARRANTY 108
ANNEXURE B – MONTHLY PROJECT LABOUR REPORT 109
ANNEXURE C - PRO FORMA PERFORMANCE SECURITY/ GUARANTEE 111
ANNEXURE D - PRO FORMA ADVANCE PAYMENT GUARANTEE 112
ANNEXURE F - TENDER RETURNABLE DOCUMENTS 113
F.1: CONTRACT PRICE ADJUSTMENT AND/OR RATE OF EXCHANGE VARIATION 113
Schedule F.2: Certificate of Authority for Partnerships/ Joint Ventures/ Consortiums 127
Schedule F.3: Declaration for Procurement above R10 million 128
Schedule F.4: Preference Points Claim Form In Terms Of the Preferential Procurement Regulations 2022 129
Schedule F.5: Declaration of Interest – State Employees (MBD 4 amended) 139
Schedule F.6: Conflict of Interest Declaration 141
Schedule F.7: Declaration of Tenderer's Past Supply Chain Management Practices (MBD 8) 142
Schedule F.8: Authorisation for the Deduction of Outstanding Amounts Owed to the CCT 144
Schedule F.9: Certificate of Independent Tender Determination 145
Schedule F.10: Proposed Deviations And Qualifications By Tenderer 146
Schedule F.11: List of Other Documents Attached By Tenderer 147
Schedule F.12: Record of Addenda to Tender Documents 148
Schedule F.13: Information to Be Provided With the Tender 149
Schedule F.13A: Technical Detail Category 1 150
Schedule F.13A: Technical Detail Category 2 152
Schedule F.14: Appeal Application 153

THE TENDER

T.1 GENERAL TENDER INFORMATION

TENDER ADVERTISED	**:**	**27 November 2026**
SITE VISIT/CLARIFICATION MEETING	:	Time:**08:30am** on Date: **10 December 2026** (Not compulsory, but strongly recommended)
VENUE FOR SITE VISIT/CLARIFICATION MEETING		:**Microsoft Teams Online Meeting** **Link below:** **https://teams.microsoft.com/meet/3893825744274712?p=5QvMAUZ3b8oDryLHS5** **Meeting ID: 389 382 574 427 471 2** **Passcode: Bh7P69n3**
TENDER BOX & ADDRESS	:	**Tender Box as per front cover** at the **Tender & Quotation Boxes Office**, 2nd Floor (Concourse Level), Civic Centre, 12 Hertzog Boulevard, Cape Town.
	:	The Tender Document (which includes the Form of Offer and Acceptance) completed and signed in all respects, plus any additional supporting documents required, must be submitted in a sealed envelope with the name and address of the tenderer, the endorsement "**TENDER NO. 31G/2026/27: - TENDER DESCRIPTION: THE SUPPLY, INSTALLATION AND REPAIR OF ALUMINIUM SWOPPABLE BODIES, CANOPIES AND STORAGE COMPARTMENTS IN CITY OF CAPE TOWN VEHICLES",** the tender box number. and the closing date indicated on the envelope. The sealed envelope must be inserted into the appropriate official tender box before closing time. If the tender offer is too large to fit into the abovementioned box or the box is full, please enquire at the public counter (Tender Distribution Office) for alternative instructions. It remains the tenderer's responsibility to ensure that the tender is placed in either the original box or as alternatively instructed.
CCT TENDER REPRESENTATIVE	**:**	Email: **SCM.Tenders31@capetown.gov.za**

TENDERERS MUST NOTE THAT WHEREVER THIS DOCUMENT REFERS TO ANY PARTICULAR TRADE MARK, NAME, PATENT, DESIGN, TYPE, SPECIFIC ORIGIN OR PRODUCER, SUCH REFERENCE SHALL BE DEEMED TO BE ACCOMPANIED BY THE WORDS "OR EQUIVALENT"

T.2 CONDITIONS OF TENDER

2.1 General

2.1.1 Actions

2.1.1.1 The City of Cape Town (hereafter referred to as the "CCT") and each tenderer submitting a tender offer (hereinafter referred to as the "tenderer" or the "supplier") shall comply with item T.2 of this Tender Document Goods and Services (hereinafter referred to as these "Conditions of Tender"). The tenderer and the CCT shall collectively hereinafter be referred to as the "Parties" and individually a "Party"). In their dealings with each other, the Parties shall discharge their duties and obligations as set out in these Conditions of Tender, timeously and with integrity, and behave equitably, honestly and transparently, and shall comply with all legal obligations imposed on the Parties herein and in accordance with all applicable laws.

The Parties agree that this tender Tender Document Goods and Services (hereinafter referred to as the"Tender" / "Tender Document"), its evaluation and acceptance and any resulting contract shall also be subject to the CCT's Supply Chain Management Policy ('SCM Policy') that was applicable on the date the bid was advertised and as amended from time to time. If the CCT adopts a new SCM Policy which contemplates that any clause therein would apply to the Contract emanating from this tender (hereinafter referred to as the "Contract"), such clause shall also be applicable to that Contract. Please refer to this document contained on the CCT's website.

Abuse of the supply chain management system is not permitted and may result, inter alia, (1) in the tender being rejected; (2) cancellation of the contract; (3) restriction of the supplier, and/or (4) the exercise by the CCT of any other remedies available to it as provided for in the SCM Policy and/or the the Contract and/or this tender and/or any applicable laws .

2.1.1.2 The CCT, the tenderer and their agents and employees involved in the tender process shall avoid conflicts of interest and where a conflict of interest is perceived or known, declare any such conflict of interest, indicating the nature of such conflict. Tenderers shall declare any potential conflict of interest in their tender submissions. Employees, agents and advisors of the CCT shall declare any conflict of interest to the CCT at the start of any deliberations relating to the procurement process or as soon as they become aware of such conflict, and abstain from any decisions where such conflict exists or recuse themselves from the procurement process, as appropriate.

2.1.1.3 The CCT shall not seek, and a tenderer shall not submit a tender, without having a firm intention and capacity to proceed with the contract.

2.1.2 Interpretation

2.1.2.1 The additional requirements contained in Annexure F to the contract (hereinafter referred to as the "returnable documents" / "Returnable Schedules") are part of these Conditions of Tender and are specifically hereby incorporated into these Conditions of Tender.

2.1.2.2 These Conditions of Tender and returnable Documents which are required for CCT's tender evaluation purposes herein, shall form part of the Contract arising from the CCT's corresponding invitation to tender.

2.1.3 Communication during tender process

Verbal or any other form of communication, from the CCT, its employees, agents or advisors during site visits/clarification meetings or at any other time prior to the award of the Contract, will not be regarded as binding on the CCT, unless communicated by the CCT in writing to suppliers / tenderers by its Director: Supply Chain Management or his nominee. Similarly, any communication of the tenderer / supplier that is not reduced to writing by the tenderer / supplier, its employees, agents or advisors, shall not be regarded as binding on the CCT, unless communicated to the CCT in writing by the suppliers / tenderers, or their duly authorised representatives.

2.1.4 The CCT's right to accept or reject any tender offer

2.1.4.1 The CCT may accept or reject any tender offer and may cancel the corresponding tender process or reject all tender offers at any time before the formation of a contract. The CCT may, prior to the award of the tender, cancel a tender if:

(a) due to changed circumstances, there is no longer a need for the services, works or goods requested; or
(b) funds are no longer available to cover the total envisaged expenditure; or
(c) no acceptable tenders are received;
(d) there is a material irregularity in the tender process; or
(e) the Parties are unable to negotiate market related pricing.

The CCT shall not accept or incur any liability to a tenderer for such cancellation or rejection, but will give written reasons for such action upon receiving a written request to do so.

2.1.5 Procurement procedures

2.1.5.1 General

Unless otherwise stated in the Conditions of Tender, a contract will be concluded with the tenderer who scores the highest number of tender adjudication points.

The CCT intends to appoint two (2) tenderers per category for Citywide use. The appointment will comprise the highest-ranked tenderer ("the Winner") and one (1) alternative tenderer ("the Alternative"), for the allocation of work. The tender consists of two (2) categories, and awards will be made on a per category basis. Should an insufficient number of responsive bids be received, the CCT reserves the right to appoint fewer tenderers, or not to make any appointment at all.

At any stage during the contract, if the Main Tenderers' capacity to perform cannot meet the operational demand, the City of Cape Town reserves the right to activate and utilise the Alternative Tenderer until such time that the Main Tenderers capacity is adequate to meet the demand. In all instances when needed, the activation of the Alternative Tenderer will take place in a consensus agreement. It will only be activated based on agreed timeframes which will be communicated to the Tenderer by the designated City of Cape Town representative.).

The contract period shall be thirty-six (36) months from commencement of contract.

2.1.5.2 Proposal procedure using the two stage-system

A two-stage system will not be followed.

2.1.5.3 Nomination of Standby Bidder

"Standby Bidder" means a bidder, identified by the CCT at the time of awarding a bid that will be considered for award should the contract be terminated for any reason whatsoever. In the event that a contract is terminated during the execution thereof, the CCT may consider the award of the contract, or non-award, to the Standby Bidder in terms of the procedures included its SCM Policy, as amended from time to time.

2.1.6 Objections, complaints, queries and disputes/ Appeals in terms of Section 62 of the Systems Act/ Access to court

2.1.6.1 Disputes, objections, complaints and queries

In terms of Regulations 49 and 50 of the Local Government: Municipal Finance Management Act, 56 of 2003 Municipal Supply Chain Management Regulations (Board Notice 868 of 2005):

a) Persons aggrieved by decisions or actions taken by the CCT in the implementation of its supply chain management system, may lodge within 14 days of the decision or action, a written objection or complaint or query or dispute against the decision or action.

2.1.6.2 Appeals

a) In terms of Section 62 of the Local Government: Municipal Systems Act, 32 of 2000 a person whose rights are affected by a decision taken by the CCT, may appeal against that decision by giving written notice of the appeal and reasons to the City Manager within 21 days of the date of the notification of the decision.

b) An appeal must contain the following:
   i. Must be in writing
   ii. It must set out the reasons for the appeal
   iii. It must state in which way the Appellant's rights were affected by the decision;
   iv. It must state the remedy sought; and
   v. It must be accompanied with a copy of the notification advising the person of the decision

c) The relevant CCT appeal authority must consider the consider the appeal and **may confirm, vary or revoke** the decision that has been appealed, but no such revocation of a decision may detract from any rights that may have accrued as a result of the decision.

2.1.6.3 Right to approach the courts and rights in terms of Promotion of Administrative Justice Act, 3 of 2000 and Promotion of Access to Information Act, 2 of 2000

The sub- clauses above do not influence any affected person's rights to approach the High Court at any time or its rights in terms of the Promotion of Administrative Justice Act (PAJA) and Promotion of Access to Information Act (PAIA).

2.1.6.4 All requests referring to sub clauses 2.1.6.1 and 2.1.6.2 must be submitted in writing to:
The City Manager - C/o the Manager: Legal Compliance Unit, Legal Services Department, Office of the City Manager
Via hand delivery at: 20th Floor, Tower Block, 12 Hertzog Boulevard, Cape Town 8001
Via post at: Private Bag X918, Cape Town, 8000
Via email at: MSA.Appeals@capetown.gov.za

2.1.6.5 All requests referring to clause 2.1.6.3 must be submitted in writing to:
The City Manager - C/o the Manager: Access to Information Unit, Legal Service Department, Office of the City Manager
Via hand delivery at: 20th Floor, Tower Block, 12 Hertzog Boulevard, Cape Town 8001
Via post at: Private Bag X918, Cape Town, 8000
Via email at: Access2info.Act@capetown.gov.za

2.1.6.6 The minimum standards regarding accessing and 'processing' of any personal information belonging to another in terms of Protection of Personal Information Act, 2013 (POPIA).

For purposes of this clause 2.1.6.6, the contract and these Conditions of Tender, the terms "data subject", "Personal Information" and "Processing" shall have the meaning as set out in section 1 of POPIA, and "Process" shall have the corresponding meaning.

The CCT, its employees, representatives and sub-contractors may, from time to time, Process the tenderer's and/or its employees', representatives' and/or sub-contractors' Personal Information, for purposes of, and/or relating to, the tender, the contract and these Conditions of Tender, for research purposes, and/or as otherwise may be envisaged in the CCT's Privacy Notice and/or in relation to the CCT's Supply Chain Management Policy or as may be otherwise permitted by law. This includes the Processing of the latter Personal Information by the CCT's due diligence assurance provider, professional advisors and the Appeal Authority as applicable. The CCT's justification for the processing of such aforesaid Personal Information is based on section 11(1)(b) of POPIA, i.e., in terms of which the CCT's Processing of the said Personal Information is necessary to carry out actions for the conclusion and/or performance of the contract, to which the applicable data subject (envisaged in this clause 2.1.6.6 above) is a party.

All requests relating to data protection must be submitted in writing to:
The City Manager - C/o the Information Officer, Office of the City Manager
Via hand delivery at: 20th Floor, Tower Block, 12 Hertzog Boulevard, Cape Town 8001
Via post at: Private Bag X9181, Cape Town, 8000
Via email at: Popia@capetown.gov.za.

2.1.6.7 Compliance to the CCTs Appeals Policy.

In terms of the CCT's Appeals Policy, a fixed upfront administration fee will be charged. In addition, a surcharge may be imposed for vexatious and frivolous or otherwise manifestly inappropriate tender related appeals.

The current approved administration fee is R300.00 and may be paid at any of the Municipal Offices

or at the Civic Centre in Cape Town using the GL Data Capture Receipt attached as Annexure F.13: Appeal Application Form. Alternatively, via EFT into the CCT's NEDBANK Account: CITY OF CAPE TOWN and using Reference number: 198158966. You are required to send proof of payment when lodging your appeal.

The current surcharge for vexatious and frivolous or otherwise manifestly inappropriate tender related appeals will be calculated as ½ (Administrative cost of the tender appeal) + 0.25 %(Appellant's tender price).

Should the payment of the administration fee of R300.00 or the surcharge not be received, such fee or surcharge will be added as a Sundry Tariff to the bidder's municipal account.

In the event where the bidder does not have a Municipal account with the CCT, the fee or surcharge may be recovered in terms of the CCT's Credit Control and Debt Collection By-law, 2006 (as amended) and its Credit Control and Debt Collection Policy.

2.1.7 CCT Supplier Database Registration

Tenderers are required to be registered on the CCT Supplier Database as a service provider. Tenderers must register as such upon being requested to do so in writing and within the period contained in such a request, failing which no orders can be raised or payments processed from the resulting contract. In the case of Joint Venture partnerships this requirement will apply individually to each party of the Joint Venture.

Tenderers who wish to register on the CCT's Supplier Database may collect registration forms from the Supplier Management Unit located within the Supplier Management / Registration Office, 2nd Floor (Concourse Level), Civic Centre, 12 Hertzog Boulevard, Cape Town (Tel 021 400 9242/3/4/5). Registration forms and related information are also available on the CCT's website www.capetown.gov.za (follow the Supply Chain Management link to Supplier registration).

It is each tenderer's responsibility to keep all the information on the CCT Supplier Database updated.

2.1.8 National Treasury Web Based Central Supplier Database (CSD) Registration

Tenderers are required to be registered on the National Treasury Web Based Central Supplier Database (CSD) as a service provider. Tenderers must register as such upon being requested to do so in writing and within the period contained in such a request, failing which no orders can be raised or payments processed from the resulting contract. In the case of Joint Venture partnerships this requirement will apply individually to each party of the Joint Venture.

Tenderers who wish to register on the National Treasury Web Based Central Supplier Database (CSD) may do so via the web address **https://secure.csd.gov.za**.

It is each tenderer's responsibility to keep all the information on the National Treasury Web Based Central Supplier Database (CSD) updated.

2.2 Tenderer's obligations

2.2.1 Eligibility Criteria

2.2.1.1 Tenderers are obligated to submit a tender offer that complies in all aspects to the conditions as detailed in this tender document and the Conditions of Tender. An 'acceptable tender must "COMPLY IN ALL" aspects with the tender, Conditions of Tender, all Specifications (i.e., item C.5 below, hereinafter the "Specifications"), pricing instructions herein and the Contract including its conditions.

2.2.1.1.1 Submit a tender offer

Only those tender submissions from which it can be established, *inter alia* that a clear, irrevocable and unambiguous offer has been made to CCT, by whom the offer has been made and what the offer constitutes, will be declared responsive.

2.2.1.1.2 Compliance with requirements of CCT SCM Policy and procedures

Only those tenders that are compliant with the requirements below will be declared responsive:

a) A completed **Details of Tenderer** to be provided (applicable schedule below to be completed);
b) A completed **Certificate of Authority for Partnerships/ Joint Ventures/ Consortiums** to be provided authorising the tender to be made and the signatory to sign the tender on the partnership /joint venture/consortium's (applicable schedule below to be completed);
c) A copy of the partnership / joint venture / consortium agreement to be provided, where applicable.
d) A completed **Declaration of Interest – State Employees** to be provided and which does not indicate any non-compliance with the legal requirements relating to state employees (applicable schedule below to be completed);
e) A completed **Declaration – Conflict of Interest and Declaration of Bidders' past Supply Chain Management Practices** to be provided and which does not indicate any conflict or past practises that renders the tender non-responsive based on the conditions contained thereon (applicable schedules below to be completed);
f) A completed **Certificate of Independent Bid Determination** to be provided and which does not indicate any non-compliance with the requirements of the schedule (applicable schedule below to be completed);
g) The tenderer (including any of its representatives, directors or members), has not been restricted in terms of abuse of the Supply Chain Management Policy,
h) The tenderer's tax matters with SARS are in order, or the tenderer is a foreign supplier that is not required to be registered for tax compliance with SARS;
i) The tenderer is not an advisor or consultant contracted with the CCT whose prior or current obligations creates any conflict of interest or unfair advantage;
j) The tenderer is not a person, advisor, corporate entity or a director of such corporate entity, who is directly or indirectly involved or associated with the bid specification committee;
k) A completed **Authorisation for the Deduction of Outstanding Amounts Owed to the CCT** to be provided and which does not indicate any details that renders the tender non-responsive based on the conditions contained thereon (applicable schedules below to be completed);
l) The tenderer (including any of its representatives, directors or members), has not been found guilty of contravening the Competition Act 89 of 1998, as amended from time to time;
m) The tenderer (including any of its representatives, directors or members), has not been found guilty on any other basis listed in the Supply Chain Management Policy.

2.2.1.1.3 Compulsory clarification meeting

Not Applicable

2.2.1.1.4 Minimum score for functionality

Not Applicable

2.2.1.1.5 Additional Responsiveness Criteria

1. **To be found responsive for any category, the tenderer must submit, at the time of tender closing, proof of a valid Vehicle Body Builder Certificate (Certificate of Registration for Manufacturer/Importer/Builder) issued in terms of the National Road Traffic Act, 1996 (Act 93 of 1996). Failure to submit a valid certificate with the tender submission will render the bid non-responsive.**

2. In order to be found responsive, tenderers are to complete and provide the following at time of closing or upon written request:

2.1. Submit all technical drawings with all relevant dimensions for all items except items 1.9, 1.10 and 1.11 in category 1 and item 2.5 in category 2 as per the pricing schedule. OEM brochures, technical drawings etc. must be in the English language and properly assembled in an appropriate lever arch file/document holder/binder with clear labels indicating the various sections.

2.2. Submit and fully complete Schedule 13A – Technical detail

2.2.1.1.7 Provision of samples

Not Applicable

2.2.2 Cost of tendering

The CCT will not be liable for any costs incurred in the preparation and submission of a tender offer, including the costs of any testing necessary to demonstrate that aspects of the offer complies with requirements.

2.2.3 Check documents

The documents issued by the CCT for the purpose of a tender offer are listed in the index of this tender document.

Before submission of any tender, the tenderer should check the number of pages, and if any are found to be missing or duplicated, or the figures or writing is indistinct, or if the Price Schedule contains any obvious errors, the tenderer must apply to the CCT at once to have the same rectified.

2.2.4 Confidentiality and copyright of documents

The tenderer shall treat as strictly confidential all matters arising in connection with the tender. Use and copy the documents issued by the CCT only for the purpose of preparing and submitting a tender offer in response to the invitation.

2.2.5 Reference documents

The tenderer shall obtain, as necessary for submitting a tender offer, copies of the latest versions of standards, specifications, Conditions of Contract and other publications, which are not attached but which are incorporated into the tender document(s) by reference.

2.2.6 Acknowledge and comply with notices

The tenderer shall acknowledge receipt of notices to the tender documents, which the CCT may issue, and shall fully comply with all instructions issued in the said notices, and if necessary, apply for an extension of the closing time stated on the front page of the tender document, in order to take the notices into account. Notwithstanding any requests for confirmation of receipt of the said notices issued, the tenderer shall be deemed to have received such notices if the CCT can show proof of transmission thereof via electronic mail, facsimile, or registered post or other lawful means.

2.2.7 Clarification meeting

The tenderer shall attend, where required, a clarification meeting at which tenderers may familiarise themselves with aspects of the proposed work, services or supply and pose questions. Details of the meeting(s) are stated in the General Tender Information (i.e., in item T.1 above).

Tenderers should be represented at the site visit/clarification meeting by a duly authorised person who is suitably qualified and experienced to comprehend the implications of the work involved.

2.2.8 Seek clarification

The tenderer shall request clarification of the tender documents, if necessary, by notifying the CCT at least one week before the closing time stated in the General Tender Information (i.e., in item T.1 above), where

possible.

2.2.9 Pricing the tender offer

2.2.9.1 The tenderer shall comply with all pricing instructions as stated on the Price Schedule.

2.2.10 Alterations to documents

The tenderer shall not make any alterations or additions to the tender documents, except to comply with instructions issued by the CCT in writing, or necessary to correct errors made by the tenderer. All signatories to the tender offer shall initial all such alterations.

2.2.11 Alternative tender offers

2.2.11.1 Unless otherwise stated in the Conditions of Tender, the tenderers may submit alternative tender offers only if a main tender offer, strictly in accordance with all the requirements of the tender documents, is also submitted.

If a tenderer wishes to submit an alternative tender offer, he/she/it shall do so as a separate offer on a complete set of tender documents. The alternative tender offer shall be submitted in a separate sealed envelope clearly marked “Alternative Tender” in order to distinguish it from the main tender offer.

Only the alternative of the highest ranked acceptable main tender offer (that is, submitted by the same tenderer) will be considered, and if appropriate, recommended for award.

Alternative tender offers of any but the highest ranked main tender offer will not be considered.

An alternative tender offer to the highest ranked acceptable main tender offer that is priced higher than the main tender offer may be recommended for award, provided that the ranking of the alternative tender offer is higher than the ranking of the next ranked acceptable main tender offer.

The CCT will not be bound to consider alternative tenders and shall have sole discretion in this regard.

In the event that the alternative is accepted, the tenderer warrants that the alternative offer complies in all respects with the CCT’s standards and requirements as set out in the tender document.

2.2.11.2 Acceptance of an alternative tender offer by the CCT may be based only on the criteria stated in the Conditions of Tender or applicable criteria otherwise acceptable to the CCT.

2.2.12 Submitting a tender offer

2.2.12.1 The tenderer is required to submit one tender offer only on the original tender documents as issued by the CCT, either as a single tendering entity or as a member in a joint venture to provide the whole of the works, services or supply identified in the Conditions of Contract and described in the Specifications. Only those tenders submitted on the tender documents as issued by the CCT together with all Tender Returnable Documents duly completed and signed will be declared responsive.

2.2.12.2 The tenderer shall return the entire tender document to the CCT after completing it in its entirety, either electronically (if they were issued in electronic format) or by writing legibly in non-erasable ink.

2.2.12.3 The tenderer shall sign the original tender offer where required in terms of the Conditions of Tender. The tender shall be signed by a person duly authorised by the tenderer to do so. Tenders submitted by joint ventures of two or more firms shall be accompanied by the document of formation / founding document of the joint venture or any other document signed by all Parties, in which is defined precisely the conditions under which the joint venture will function, its period of duration, the persons authorised to represent and obligate it, the participation of the several firms forming the joint venture, and any other information necessary to permit a full appraisal of its functioning. Signatories for tenderers proposing to contract as joint ventures shall state which of the signatories is the lead partner.

2.2.12.4 Where a two-envelope system is required in terms of the Conditions of Tender, place and seal the returnable documents listed in the Conditions of Tender in an envelope marked “financial proposal” and place the remaining returnable documents in an envelope marked “technical proposal”. Each

envelope shall state on the outside the CCT's address and identification details stated in the General Tender Information (i.e., item T.1 above), as well as the tenderer's name and contact address.

2.2.12.5 The tenderer shall seal the original tender offer and copy packages together in an outer package that states on the outside only the CCT's address and identification details as stated in the General Tender Information. . If it is not possible to submit the original tender and the required copies (see 2.2.12.3) in a single envelope, then the tenderer must seal the original and each copy of the tender offer as separate packages marking the packages as "ORIGINAL" and "COPY" in addition to the aforementioned tender submission details.

2.2.12.6 The CCT shall not assume any responsibility for the misplacement or premature opening of the tender offer if the outer package is not sealed and marked as stated.

2.2.12.7 Tender offers submitted by facsimile or e-mail will be rejected by the CCT, unless stated otherwise in the Conditions of Tender.

2.2.12.8 By signing the offer part of the Form of Offer (**C.2, Part C2.1 hereto**) the tenderer warrants and agrees that all information provided in the tender submission is true and correct.

2.2.12.9 Tenderers shall properly deposit its bid in the designated tender box (as detailed on the front page of this tender document) on or before the closing date and before the closing time, in the relevant tender box at the Tender & Quotation Boxes Office situated on the 2nd floor, Concourse Level, Civic Centre, 12 Hertzog Boulevard, Cape Town. If the tender submission is too large to fit in the allocated box, please enquire at the public counter for assistance.

2.2.12.10 The tenderer must record and reference all information submitted contained in other documents for example cover letters, brochures, catalogues, etc. in the Returnable Schedule titled **List of Other Documents Attached by Tenderer**.

2.2.13 Information and data to be completed in all respects

Tender offers, which do not provide all the data or information requested completely and in the form required, may be regarded by the CCT as non-responsive.

2.2.14 Closing time

2.2.14.1 The tenderer shall ensure that the CCT receives the tender offer, together with all applicable documents specified herein, at the address specified in the General Tender Information herein prior to the closing time stated on the front page of the tender document.

2.2.14.2 If the CCT extends the closing time stated on the front page of the tender document for any reason, the requirements of these Conditions of Tender apply equally to the extended deadline.

2.2.14.3 The CCT shall not consider tenders that are received after the closing date and time for such a tender (late tenders).

2.2.15 Tender offer validity and withdrawal of tenders

2.2.15.1 The tenderer shall warrant that the tender offer(s) remains valid, irrevocable and open for acceptance by the CCT at any time for a period of 120 days after the closing date stated on the front page of the tender document.

2.2.15.2 Notwithstanding the period stated in clause 2.2.15.1 above, bids shall remain valid for acceptance for a period of twelve (12) months after the expiry of the original validity period, unless the CCT is notified in writing of anything to the contrary by the bidder. The validity of bids may be further extended by a period of not more than six months subject to mutual agreement by the parties, administrative processes and upon approval by the City Manager, unless the required extension is as a result of an appeal process or court ruling.

In circumstances where the validity period of a tender has expired, and the tender has not been awarded, the tender process is considered "completed", despite there being no decision (award or cancellation) made. This anomaly does not fall under any of the listed grounds of cancellation and should be treated as a "non award". A "non award" is supported as a recommendation to the CCT's Bod Adjudication Committee ("BAC") for noting.

2.2.15.3 A tenderer may request in writing, after the closing date, that its tender offer be withdrawn. Such withdrawal will be permitted or refused at the sole discretion of the CCT after consideration of the reasons for the withdrawal, which shall be fully set out by the tenderer in such written request for withdrawal. Should the tender offer be withdrawn in contravention hereof, the tenderer agrees that:

a) it shall be liable to the CCT for any additional expense incurred or losses suffered by the CCT in having either to accept another tender or, if new tenders have to be invited, the additional expenses incurred or losses suffered by the invitation of new tenders and the subsequent acceptance of any other tender;

b) the CCT shall also have the right to recover such additional expenses or losses by set-off against monies which may be due or become due to the tenderer under this or any other tender or contract or against any guarantee or deposit that may have been furnished by the tenderer or on its behalf for the due fulfilment of this or any other tender or contract. Pending the ascertainment of the amount of such additional expenses or losses, the CCT shall be entitled to retain such monies, guarantee or deposit as security for any such expenses or loss, without prejudice to the CCT's other rights and/or remedies available to it in accordance with any applicable laws.

2.2.16 Clarification of tender offer, or additional information, after submission

Tenderer's shall promptly provide clarification of its tender offer, or additional information, in response to a written request to do so from the CCT during the evaluation of tender offers within the time period stated in such request. No change in the competitive position of tenderers or substance of the tender offer is sought, offered, or permitted.

Note: This clause does not preclude the negotiation of the final terms of the contract with a preferred tenderer following a competitive selection process, should the CCT elect to do so.

Failure, or refusal, to provide such clarification or additional information within the time for submission stated in the CCT's written request may render the tender non-responsive.

2.2.17 Provide other material

2.2.17.1 Tenderer's shall promptly provide, upon request by the CCT, any other material that has a bearing on the tender offer, the tenderer's commercial position (including joint venture agreements), preferencing arrangements, or samples of materials, considered necessary by the CCT for the purpose of the evaluation of the tender. Should the tenderer not provide the material, or a satisfactory reason as to why it cannot be provided, by the time for submission stated in the CCT's request, the CCT may regard the tender offer as non-responsive.

2.2.17.2 The tenderer shall provide, on written request by the CCT, where the transaction value inclusive of VAT **exceeds R 10 million**:

a) audited annual financial statement for the past 3 years, or for the period since establishment if established during the past 3 years, if required by law to prepare annual financial statements for auditing;
b) a certificate signed by the tenderer certifying that the tenderer has no undisputed commitments for municipal services towards a municipality or other service provider in respect of which payment is overdue for more than 30 days;
c) particulars of any contracts awarded to the tenderer by an organ of state during the past five years, including particulars of any material non-compliance or dispute concerning the execution of such contract;
d) a statement indicating whether any portion of the goods or services are expected to be sourced from outside the Republic, and, if so, what portion and whether any portion of payment from the municipality or municipal entity is expected to be transferred out of the Republic.

Each entity to a Consortium/Joint Venture bid shall submit separate certificates/statements in the above regard.

2.2.17.3 Tenderers shall be required to undertake to fully cooperate with the CCT's external service provider appointed to perform a due diligence review and risk assessment upon receipt of such written instruction from the CCT.

2.2.18 Samples, Inspections, tests and analysis

Tenderers shall provide access during working hours to premises for inspections, tests and analysis as provided for in the Conditions of Tender or Specifications.

If the Specifications requires the tenderer to provide samples, these shall be provided strictly in accordance with the instructions set out in the Specification.

If such samples are not submitted as required in the bid documents or within any further time stipulated by the CCT in writing, then the bid concerned may be declared non-responsive.

The samples provided by all successful bidders will be retained by the CCT for the duration of any subsequent contract. Bidders are to note that samples are requested for testing purposes therefore samples submitted to the CCT may not in all instances be returned in the same state of supply and in other instances may not be returned at all. Unsuccessful bidders will be advised by the Project Manager or dedicated CCT Official to collect their samples, save in the aforementioned instances where the samples would not be returned.

2.2.19 Certificates

The tenderer must provide the CCT with all certificates as stated below:

2.2.19.1. Preference Points for Specific Goals
In order to qualify for preference points for HDI and/or Specific Goals, it is the responsibility of the tenderer to submit documentary proof (Company registration certification, Central Supplier Database report, BBBEE certificate, Proof of Disability, Financial Statements,commissioned sworn affidavits, etc.) in support of tenderer claims for such preference for that specific goal.

Tenderers are further referred to the content of the Preference Schedule for the full terms and conditions applicable to the awarding of preference points.

2.2.19.2 Evidence of tax compliance

Tenderers shall be registered with the South African Revenue Service (SARS) and their tax affairs must be in order and they must be tax compliant subject to the requirements of clause 2.2.1.1.2.h. In this regard, it is the responsibility of the Tenderer to submit evidence in the form of a valid Tax Compliance Status PIN issued by SARS to the CCT at the Supplier Management Unit located within the Supplier Management / Registration Office, 2nd Floor (Concourse Level), Civic Centre, 12 Hertzog Boulevard, Cape Town (Tel 021 400 9242/3/4/5), or included with this tender. The tenderer must record its Tax Compliance Status PIN number on the **Details of Tenderer** pages of the tender submission.

Each party to a Consortium/Joint Venture shall submit a separate Tax Compliance Status Pin.

Before making an award the CCT must verify the bidder's tax compliance status. Where the recommended bidder is not tax compliant, the bidder should be notified of the non-compliant status and be requested to submit to the CCT, within 7 working days, written proof from SARS that they have made arrangement to meet their outstanding tax obligations. The proof of tax compliance submitted by the bidder must be verified by the CCT via CSD or e-Filing. The CCT should reject a bid submitted by the bidder if such bidder fails to provide proof of tax compliance within the timeframe stated herein.

Only foreign suppliers who have answered "NO" to all the questions contained in the Questionnaire to Bidding Foreign Suppliers section on the **Details of Tenderer** pages of the tender submission, are not required to register for a tax compliance status with SARS.

2.2.20 Compliance with Occupational Health and Safety Act, 85 of 1993

Tenderers are to note the requirements of the Occupational Health and Safety Act, 85 of 1993. The Tenderer shall be deemed to have read and fully understood the requirements of the above Act and Regulations and to have allowed for all costs in compliance therewith.

In this regard the Tenderer shall submit **upon written request to do so by the CCT**, a Health and Safety Plan in sufficient detail to demonstrate the necessary competencies and resources to deliver the goods or services all in accordance with the Act, Regulations and Health and Safety Specification.

2.2.21 Claims arising from submission of tender

By responding to the tender herein, the tenderer warrants that it has:

a) Inspected the Specifications and read and fully understood the Conditions of Contract.

b) Read and fully understood the whole text of the Specifications and Price Schedule and thoroughly acquainted himself with the nature of the goods or services proposed and generally of all matters which may influence the Contract.

c) visited the site(s) where delivery of the proposed goods will take place, carefully examined existing conditions, the means of access to the site(s), the conditions under which the delivery is to be made, and acquainted himself with any limitations or restrictions that may be imposed by the Municipal or other Authorities in regard to access and transport of materials, plant and equipment to and from the site(s) and made the necessary provisions for any additional costs involved thereby.

d) requested the CCT to clarify the actual requirements of anything in the Specifications and Price Schedule, the exact meaning or interpretation of which is not clearly intelligible to the Tenderer.

e) Received any notices to the tender documents which have been issued in accordance with the CCT's Supply Chain Management Policy.

The CCT will therefore not be liable for the payment of any extra costs or claims arising from the submission of the tender.

2.3 The CCT's undertakings

2.3.1 Respond to requests from the tenderer

2.3.1.1 Unless otherwise stated in the Conditions of Tender, the CCT shall respond to a request for clarification received up to one week (where possible) before the tender closing time stated on the front page of the tender document.

2.3.1.2 The CCT's duly authorised representative for the purpose of this tender is stated on the General Tender Information page above.

2.3.2 Issue Notices

If necessary, the CCT may issue addenda in writing that may amend or amplify the tender documents to each tenderer during the period from the date the tender documents are available until one week before the tender closing time stated in the Tender Data. The CCT reserves its rights to issue addenda less than one week before the tender closing time in exceptional circumstances If, as a result a tenderer applies for an extension to the closing time stated on the front page of the tender document, the CCT may grant such extension and, shall then notify all tenderers who drew documents.

Notwithstanding any requests for confirmation of receipt of notices issued, the tenderer shall be deemed to have received such notices if the CCT can show proof of transmission thereof via electronic mail, facsimile or registered post.

2.3.3 Opening of tender submissions

2.3.3.1 Unless the two-envelope system is to be followed, CCT shall open tender submissions in the presence of tenderers' agents who choose to attend at the time and place stated in the Conditions of Tender.

Tenders will be opened immediately after the closing time for receipt of tenders as stated on the front page of the tender document, or as stated in any Notice extending the closing date and at the closing venue as stated in the General Tender Information.

2.3.3.2 Announce at the meeting held immediately after the opening of tender submissions, at the closing venue as stated in the General Tender Information, the name of each tenderer whose tender offer is opened and, where possible, the prices indicated.

2.3.3.3 Make available a record of the details announced at the tender opening meeting on the CCT's website (http://www.capetown.gov.za/en/SupplyChainManagement/Pages/default.aspx.)

2.3.4 two-envelope system

2.3.4.1 Where stated in the Conditions of Tender that a two-envelope system is to be followed, the CCT shall open only the technical proposal of tenders in the presence of tenderers' agents who choose to attend at the time and place stated in the Conditions of Tender and announce the name of each tenderer whose technical proposal is opened.

2.3.4.2 The CCT shall evaluate the quality of the technical proposals offered by tenderers, then advise tenderers who have submitted responsive technical proposals of the time and place when the financial proposals will be opened. The CCT shall open only the financial proposals of tenderers, who have submitted responsive technical proposals in accordance with the requirements as stated in the Conditions of Tender, and announce the total price and any preference claimed. Return unopened financial proposals to tenderers whose technical proposals were non responsive.

2.3.5 Non-disclosure

The CCT shall not disclose to tenderers, or to any other person not officially concerned with such processes, information relating to the evaluation and comparison of tender offers and recommendations for the award of a contract, until after the award of the contract to the successful tenderer.

2.3.6 Grounds for rejection and disqualification

The CCT shall determine whether there has been any effort by a tenderer to influence the processing of tender

offers and instantly disqualify a tenderer (and his tender offer) if it is established that he engaged in corrupt or fraudulent practices.

2.3.7 Test for responsiveness

2.3.7.1 Appoint a Bid Evaluation Committee and determine after opening whether each tender offer properly received:

a) complies with the requirements of these Conditions of Tender,
b) has been properly and fully completed and signed, and
c) is responsive to the other requirements of the tender documents.

2.3.7.2 A responsive tender is one that conforms to all the terms, conditions, and specifications of the tender documents without material deviation or qualification. A material deviation or qualification is one which, in the CCT's opinion, would:

a) Detrimentally affect the scope, quality, or performance of the goods, services or supply identified in the Specifications,
b) Significantly change the CCT's or the tenderer's risks and responsibilities under the contract, or
c) affect the competitive position of other tenderers presenting responsive tenders, if it were to be rectified.

Reject a non-responsive tender offer, and not allow it to be subsequently made responsive by correction or withdrawal of any material deviation or qualification.

The CCT reserves the right to accept a tender offer which does not, in the CCT's opinion, materially and/or substantially deviate from the terms, conditions, and specifications of the tender documents.

2.3.8 Arithmetical errors, omissions and discrepancies

2.3.8.1 Check the responsive tenders for:

a) The gross misplacement of the decimal point in any unit rate;
b) Omissions made in completing the Price Schedule; or
c) Arithmetic errors in:
    i) line item totals resulting from the product of a unit rate and a quantity in the Price Schedule; or
    ii) The summation of the prices; or
    iii) Calculation of individual rates.

2.3.8.2 The CCT must correct the arithmetical errors in the following manner:

a) Where there is a discrepancy between the amounts in words and amounts in figures, the amount in words shall govern.
b) If pricing schedules apply and there is an error in the line item total resulting from the product of the unit rate and the quantity, the line item total shall govern and the rate shall be corrected. Where there is an obviously gross misplacement of the decimal point in the unit rate, the line item total as tendered shall govern, and the unit rate shall be corrected.
c) Where there is an error in the total of the prices either as a result of other corrections required by this checking process or in the tenderer's addition of prices, the total of the prices shall govern and the tenderer will be asked to revise selected item prices (and their rates if Price Schedules apply) to achieve the tendered total of the prices.

Consider the rejection of a tender offer if the tenderer does not correct or accept the correction of the arithmetical error in the manner described above.

2.3.8.3 In the event of tendered rates or lump sums being declared by the CCT to be unacceptable to it because they are not priced, either excessively low or high, or not in proper balance with other rates or lump sums, the tenderer may be required to produce evidence and advance arguments in support of the tendered rates or lump sums objected to. If, after submission of such evidence and any further evidence requested, the CCT is still not satisfied with the tendered rates or lump sums objected to, it may request the tenderer to amend these rates and lump sums along the lines indicated by it.

The tenderer will then have the option to alter and/or amend the rates and lump sums objected to and such other related amounts as are agreed on by the CCT, but this shall be done without altering the tender offer in accordance with this clause.

Should the tenderer fail to amend his tender in a manner acceptable to and within the time stated by the CCT, the CCT may declare the tender as non-responsive.

2.3.9 Clarification of a tender offer

The CCT may, after the closing date, request additional information or clarification from tenderers, in writing on any matter affecting the evaluation of the tender offer or that could give rise to ambiguity in a contract arising from the tender offer, which written request and related response shall not change or affect their competitive position or the substance of their offer. Such request may only be made in writing by the Director: Supply Chain Management using any means as appropriate.

2.3.10 Evaluation of tender offers

2.3.10.1 General

2.3.10.1.1 The CCT may reduce each responsive tender offer to a comparative price and evaluate them using the tender evaluation methods and associated evaluation criteria and weightings that are specified in the Conditions of Tender.

2.3.10.1.2 For evaluation purposes only, the effects of the relevant contract price adjustment methods will be considered in the determination of comparative prices as follows:

a) If the selected method is based on bidders supplying rates or percentages for outer years, comparative prices would be determined over the entire contract period based on such rates or percentages.
b) If the selected method is based on a formula, indices, coefficients, etc. that is the same for all bidders during the contract period, comparative prices would be the prices as tendered for year one.
c) If the selected method is based on a formula, indices, coefficients, etc. that varies between bidders, comparative prices would be determined over the entire contract period based on published indices relevant during the 12 months prior to the closing date of tenders.
d) If the selected method includes an imported content requiring rate of exchange variation, comparative prices would be determined based on the exchange rates tendered for the prices as tendered for year one. The rand equivalent of the applicable currency 14 days prior to the closing date of tender will be used (the CCT will check all quoted rates against those supplied by its own bank).
e) If the selected method is based on suppliers' price lists, comparative prices would be the prices as tendered for year one.
f) If the selected method is based on suppliers' price lists and / or rate of exchange, comparative prices would be determined as tendered for year one whilst taking into account the tendered percentage subject to rate of exchange (see sub clause (d) for details on the calculation of the rate of exchange).

2.3.10.1.3 Where the scoring of functionality forms part of a bid process, each member of the Bid Evaluation Committee must individually score functionality. The individual scores must then be interrogated and calibrated if required where there are significant discrepancies. The individual scores must then be added together and averaged to determine the final score.

2.3.10.2 Decimal places

Score financial offers, preferences and functionality, as relevant, to two decimal places.

2.3.10.3 Scoring of tenders (price and preference)

[2.3.10.3.1 Points for price will be allocated in accordance with the formula set out in this clause based on the price per item / rates as set out in the **Price Schedule (Section C.4)**:

- Based on the sum of the prices/rates in relation to the estimated quantities. (Award per category)

2.3.10.3.2 Points for preference will be allocated in accordance with the provisions of **Preference Schedule** and the table in this clause.

2.3.10.3.3 The terms and conditions of **Preference Schedule** as it relates to preference shall apply in all respects to the tender evaluation process and any subsequent contract.

2.3.10.3.4 Applicable formula:

The 80/20 price/preference points system will be applied to the evaluation of responsive tenders up to and including a Rand value of R50'000'000 (all applicable taxes included), whereby the order(s) will be placed with the tenderer(s) scoring the highest total number of adjudication points.
Price shall be scored as follows:

$$Ps = 80 \times \left(1 - \frac{Pt - Pmin}{Pmin}\right)$$

Where: Ps is the number of points scored for price;
Pt is the price of the tender under consideration;
Pmin is the price of the lowest responsive tender.

Preference points shall be based on the Specific Goal as per below:

Table B1: Awards above R750 000 and up to R50 mil (VAT Inclusive)

#	Specific goals allocated points	Preference Points (80/20)
	Reconstruction and Development Programme (RDP) as published in Government Gazette	
1	***Promotion of Micro and Small Enterprises*** *Micro with a turnover up to R20million and Small with a turnover up to R80 million as per National Small Enterprise Act, 1996 (Act No.102 of 1996)* *SME partnership, sub-contracting, joint venture or consortiums*	8
2	***Enterprise Supplier Development and Socio Economic Development*** *> 15% of total expenditure = 6 points* *> 12% up to 15% of total expenditure = 5 points* *> 9% up to 12% of total expenditure = 4 points* *> 6% up to 9% of total expenditure = 3 points* *> 3% up to 6% of total expenditure = 2 points* *>= 1% up to 3% total expenditure = 1 points* *< 1% of total expenditure = 0 points*	6
3	***Skills Development OR Employee Share Scheme*** ***Skills Development*** *> 5% of total profit = 6 points* *> 4% up to 5% of total profit = 5 points* *> 3% up to 4% of total profit = 4 points* *> 2% up to 3% of total profit = 3 points* *> 1% up to 2% of total profit = 2 points* *>= 0.5% up to 1% of total profit = 1 points*	6

	< 0.5% of total profit = 0 points	
	OR Employee Share Scheme	
	> 15% employee ownership = 6 points *> 12% up to 15% employee ownership = 5 points* *> 9% up to 12% employee ownership = 4 points* *> 6% up to 9% employee ownership = 3 points* *> 3% up to 6% employee ownership = 2 points* *>= 1% to 3% employee ownership = 1 points* *< 1% employee ownership = 0 points*	
	Total points	**20**

**Ownership: main tendering entity*

2.3.10.5 Risk Analysis

Notwithstanding compliance with regard to any requirements of the tender, the CCT will perform a risk analysis in respect of the following:

a) reasonableness of the financial offer
b) reasonableness of unit rates and prices
c) the tenderer's ability to fulfil its obligations in terms of the tender document, that is, that the tenderer can demonstrate that he/she possesses the necessary professional and technical qualifications, professional and technical competence, financial resources, equipment and other physical facilities, managerial capability, reliability, capacity, experience, reputation, personnel to perform the contract, etc.; the CCT reserves the right to consider a tenderer's existing contracts with the CCT in this regard
d) any other matter relating to the submitted bid, the tendering entity, matters of compliance, verification of submitted information and documents, etc.

The conclusions drawn from this risk analysis will be used by the CCT in determining the acceptability of the tender offer.

No tenderer will be recommended for an award unless the tenderer has demonstrated to the satisfaction of the CCT that he/she has the resources and skills required.

2.3.11 Negotiations with preferred tenderers

The CCT may negotiate the final terms of a contract with tenderers identified through a competitive tendering process as preferred tenderers provided that such negotiation:

a) Does not allow any preferred tenderer a second or unfair opportunity;
b) Is not to the detriment of any other tenderer; and
c) Does not lead to a higher price than the tender as submitted.

If negotiations fail to result in acceptable contract terms, the City Manager (or his delegated authority) may terminate the negotiations and cancel the tender, or invite the next ranked tenderer for negotiations. The original preferred tenderer should be informed of the reasons for termination of the negotiations. If the decision is to invite the next highest ranked tenderer for negotiations, the failed earlier negotiations may not be reopened by the CCT.

Minutes of any such negotiations shall be kept for record purposes.

The provisions of this clause will be equally applicable to any invitation to negotiate with any other tenderers.

In terms of the CCT's SCM Policy, tenders must be cancelled in the event that negotiations fail to achieve a market related price with any of the three highest scoring tenderers.

2.3.12 Acceptance of tender offer

Notwithstanding any other provisions contained in the tender document, the CCT reserves the right to:

2.3.12.1 Accept a tender offer(s) which does not, in the CCT's opinion, materially and/or substantially deviate from the terms, conditions, and specifications of the tender document.

2.3.12.2 Accept the whole tender or part of a tender or any item or part of any item or items from multiple manufacturers, or to accept more than one tender (in the event of a number of items being offered), and the CCT is not obliged to accept the lowest or any tender.

2.3.12.3 Accept the tender offer(s), if in the opinion of the CCT, it does not present any material risk and only if the tenderer(s):

a) is not under restrictions, has any principals who are under restrictions, or is not currently a supplier to whom notice has been served for abuse of the supply chain management system, preventing participation in the CCT's procurement,
b) can, as necessary and in relation to the proposed contract, demonstrate that he or she possesses the professional and technical qualifications, professional and technical competence, financial resources, equipment and other physical facilities, managerial capability, reliability, experience and reputation, expertise and the personnel, to perform the contract,
c) has the legal capacity to enter into the contract,
d) is not insolvent, in receivership, under Business Rescue as provided for in chapter 6 of the Companies Act, 2008, bankrupt or being wound up, has his affairs administered by a court or a judicial officer, has suspended his business activities, or is subject to legal proceedings in respect of any of the foregoing, complies with the legal requirements, if any, stated in the tender data, and
e) is able, in the opinion of the CCT, to perform the contract free of conflicts of interest.

If an award cannot be made in terms of anything contained herein, the CCT reserves the right to consider the next ranked tenderer(s).

2.3.12.4 The CCT reserves the right not to make an award, or revoke an award already made, where the implementation of the contract may result in reputational risk or harm to the CCT as a result of (inter alia):

a) reports of poor governance or unethical behaviour, or both;
b) association with known notorious individuals and family of notorious individuals;
c) poor performance issues, known to the CCT;
d) negative media reports, including negative social media reports;
e) adverse assurance (e.g. due diligence) report outcomes; and
f) circumstances where the relevant vendor has employed, or is directed by, anyone who was previously employed in the service of the state (as defined in clause 1.53 of the SCM Policy), where the person is or was negatively implicated in any SCM irregularity.

2.3.12.5 The CCT reserves the right to nominate an StandbyBbidder at the time when an award is made and in the event that a contract is terminated during the execution thereof, the CCT may consider the award of the contract, or non-award, to the Standby Bidder in terms of the procedures included its SCM Policy.

2.3.13 Prepare contract documents

2.3.13.1 If necessary, revise documents that shall form part of the contract and that were issued by the CCT as part of the tender documents to take account of:

a) Notices issued during the tender period,
b) Inclusion of some of the returnable documents, and
c) Other revisions agreed between the CCT and the successful tenderer.

2.3.13.2 Complete the schedule of deviations attached to the form of offer and acceptance, if any.

2.3.14 Notice to successful and unsuccessful tenderers

2.3.14.1 Before accepting the tender of the successful tenderer the CCT shall notify the successful tenderer in writing of the decision of the CCT's Bid Adjudication Committee to award the tender to the successful tenderer. No rights shall accrue to the successful tenderer in terms of this notice

2.3.14.2 The CCT shall, at the same time as notifying the successful tenderer of the Bid Adjudication Committee's decision to award the tender to the successful tenderer, also give written notice to the other tenderers informing them that they have been unsuccessful.

2.3.15 Provide written reasons for actions taken

Provide upon request written reasons to tenderers for any action that is taken in applying these Conditions of Tender, but withhold information which is not in the public interest to be divulged, which is considered to prejudice the legitimate commercial interests of tenderers or might prejudice fair competition between tenderers.

TENDER NO: 31G/2026/27

TENDER DESCRIPTION: THE SUPPLY, INSTALLATION AND REPAIR OF ALUMINIUM SWOPPABLE BODIES, CANOPIES AND STORAGE COMPARTMENTS IN CITY OF CAPE TOWN VEHICLES

CONTRACT PERIOD: A PERIOD OF THIRTY-SIX (36) MONTHS FROM DATE OF COMMENCEMENT OF CONTRACT

THE CONTRACT

THE CITY OF CAPE TOWN	
A metropolitan municipality, established in terms of the Local Government: Municipal Structures Act, 117 of 1998 read with the Province of the Western Cape: Provincial Gazette 5588 dated 22 September 2000, as amended ("the Purchaser") herein represented by	
AUTHORISED REPRESENTATIVE	

AND

SUPPLIER	
NAME of Company/Close Corporation or Partnership / Joint Venture/ Consortium or Sole Proprietor /Individual (The "Supplier" / "tenderer")	
TRADING AS (if different from above)	
REGISTRATION NUMBER	
PHYSICAL ADDRESS / CHOSEN DOMICILIUM CITANI ET EXECTUANDI OF THE SUPPLIER	
AUTHORISED REPRESENTATIVE	
CAPACITY OF AUTHORISED REPRESENTATIVE	

(HEREINAFTER COLLECTIVELY REFERRED TO AS "THE PARTIES" AND INDIVIDUALLY A "PARTY")

NATURE OF TENDER OFFER (please indicate below)	
Main Offer (see clause 2.2.11.1)	
Alternative Offer (see clause 2.2.11.1)	

C.1 DETAILS OF TENDERER/SUPPLIER

1.1 Type of Entity (Please tick one box)

☐ Individual / Sole Proprietor ☐ Close Corporation ☐ Company

☐ Partnership or Joint Venture or Consortium ☐ Trust ☐ Other:

1.2 Required Details (Please provide applicable details in full):

Name of Company / Close Corporation or Partnership / Joint Venture / Consortium or Individual /Sole Proprietor	
Trading as (if different from above	
Company / Close Corporation registration number (if applicable)	
Postal address	Postal Code _____
Physical address (Chosen Domicilium Citandi Et Executandi)	Postal Code _____
Contact details of the person duly authorised to represent the tenderer	Name: Mr/Ms _____ (Name & Surname) Telephone :(____) _____ Fax :(____) _____ Cellular Telephone:_____ E-mail address:_____
Income tax number	
VAT registration number	
SARS Tax Compliance Status PIN	
CCT Supplier Database Registration Number (See Conditions of Tender)	
National Treasury Central Supplier Database registration number (See Conditions of Tender)	
Is tenderer the accredited representative in South Africa for the Goods / Services / Works offered?	☐Yes ☐No If yes, enclose proof
Is tenderer a foreign based supplier for the Goods / Services / Works offered?	☐Yes ☐No If yes, answer the Questionnaire to Bidding Foreign Suppliers (below)
Questionnaire to Bidding Foreign Suppliers	a) Is the tenderer a resident of the Republic of South Africa or an entity registered in South Africa? ☐Yes ☐No
	b) Does the tenderer have a permanent establishment in the Republic of South Africa? ☐Yes ☐No
	c) Does the tenderer have any source of income in the Republic of South Africa? ☐Yes ☐No
	d) Is the tenderer liable in the Republic of South Africa for any form of taxation? ☐Yes ☐No
Other Required registration numbers	

C.2 FORM OF OFFER AND ACCEPTANCE

TENDER 31G/2026/27 - THE SUPPLY, INSTALLATION AND REPAIR OF ALUMINIUM SWOPPABLE BODIES, CANOPIES AND STORAGE COMPARTMENTS IN CITY OF CAPE TOWN VEHICLES

C.2.1 Offer (To Be Completed by the Tenderer as Part of Tender Submission)

The tenderer, identified in the offer signature table below,

HEREBY AGREES THAT by signing the *Form of Offer and Acceptance,* the tenderer:

1. confirms that it has examined the documents listed in the Index (including Schedules and Annexures) and has accepted all the Conditions of Tender;

2. confirms that it has received and incorporated any and all notices issued to tenderers issued by the CCT;

3. confirms that it has satisfied itself as to the correctness and validity of the tender offer; that the price(s) and rate(s) offered cover all the goods and/or services specified in the tender documents; that the price(s) and rate(s) cover all its obligations and accepts that any mistakes regarding price(s), rate(s) and calculations will be at its own risk;

4. offers to supply all or any of the goods and/or render all or any of the services described in the tender document to the CCT in accordance with the:
   4.1 terms and conditions stipulated in this tender document;
   4.2 specifications stipulated in this tender document; and
   4.3 at the prices as set out in the **Price Schedule**.

5. accepts full responsibility for the proper execution and fulfilment of all obligations and conditions devolving on it in terms of the Contract.

SIGNED AT _____ (PLACE) ON THE _____ (DAY) OF_____ (MONTH AND YEAR)

_____
For and on behalf of the Supplier
(Duly Authorised)
Name and Surname:

_____
Witness 1 Signature
Name and Surname:

_____
Witness 2 Signature
Name and Surname:

INITIALS OF CCT OFFICIALS		
1	2	3

TENDER: 31G/2026/27 - THE SUPPLY, INSTALLATION AND REPAIR OF ALUMINIUM SWOPPABLE BODIES, CANOPIES AND STORAGE COMPARTMENTS IN CITY OF CAPE TOWN VEHICLES

C.2.2 Acceptance (To Be Completed by the CCT)

By signing this part of this *Form of Offer and Acceptance*, the CCT accepts the tenderer's (if awarded the Supplier's) offer. In consideration thereof, the CCT shall pay the Supplier the amount due in accordance with the conditions of contract. Acceptance of the Supplier's offer shall form an agreement between the CCT and the Supplier upon the terms and conditions contained in this document.

The terms of the agreement are contained in the Contract (as defined) including drawings and documents or parts thereof, which may be incorporated by reference.

Deviations from and amendments to the documents listed in the tender data and any addenda thereto as listed in the *Tender Returnable Documents* as well as any changes to the terms of the offer agreed by the tenderer and the CCT during this process of offer and acceptance, are contained in the *Schedule of Deviations* attached to and forming part of this *Form of Offer and Acceptance*. No amendments to or deviations from said documents are valid unless contained in the *Schedule of Deviations.*

The Supplier shall within 2 (two) weeks after contract commencement, contact the CCT to arrange the delivery of any securities, bonds, guarantees, proof of insurance and any other documents to be provided in terms the *Special Conditions of Contract*. Failure to fulfil any of these obligations in accordance with those terms shall constitute a repudiation / breach of the agreement.

Unless indicated otherwise in the Deviation Schedule, this agreement comes into effect on the Commencement Date, being the date upon which the Supplier confirms receipt from the CCT of 1 (one) complete, signed copy of the Contract, including amendments or deviations contained in the *Schedule of Deviations* (if any).

_____
For and on behalf of the City of Cape Town
(Duly Authorised)
Name and Surname:

_____
Witness 1 Signature
Name and Surname:

_____
Witness 2 Signature
Name and Surname:

TENDER: 31G/2026/27 - THE SUPPLY, INSTALLATION AND REPAIR OF ALUMINIUM SWOPPABLE BODIES, CANOPIES AND STORAGE COMPARTMENTS IN CITY OF CAPE TOWN VEHICLES

C.2.3 Schedule of Deviations (To be Completed by the CCT upon Acceptance)

Notes:

1. The extent of deviations from the tender documents issued by the CCT before the tender closing date, is limited to those permitted in terms of the conditions of tender.
2. A tenderer's covering letter shall not be included in the final Contract document. Should any matter in such letter, which constitutes a deviation as aforesaid, become the subject of agreements reached during the process of offer and acceptance, the outcome of such agreement shall be recorded here.
3. Any other matter arising from the process of offer and acceptance either as a confirmation, clarification or change to the tender documents and which it is agreed by the Parties to become an obligation of the Contract, shall be recorded here.
4. Any change or addition to the tender documents arising from the above agreements and recorded here, shall form part of the Contract.

1 Subject . . . . . .

Details . . . . . .

. . . . . .

. . . . . .

. . . . . .

2 Subject . . . . . .

Details . . . . . .

. . . . . .

. . . . . .

. . . . . .

3 Subject . . . . . .

Details . . . . . .

. . . . . .

. . . . . .

. . . . . .

4 Subject . . . . . .

Details . . . . . .

. . . . . .

. . . . . .

. . . . . .

By the duly authorised representatives signing this agreement, the CCT and the tenderer agree to and accept the foregoing schedule of deviations as the only deviations from and amendments to this tender document and addenda thereto as listed in the *Tender Returnable Documents*, as well as any confirmation, clarification or changes to the terms of the offer agreed by the tenderer and the CCT during this process of offer and acceptance.

It is expressly agreed that no other matter whether in writing, oral communication or implied during the period between the issue of the tender documents and the Commencement Date, shall have any meaning or effect between the Parties arising from the agreement.

TENDER : 31G/2026/27 - THE SUPPLY, INSTALLATION AND REPAIR OF ALUMINIUM SWOPPABLE BODIES, CANOPIES AND STORAGE COMPARTMENTS IN CITY OF CAPE TOWN VEHICLES

C.2.4 Confirmation of Receipt (To be Completed by Supplier upon Acceptance)

The Supplier identified in the offer part of the Contract hereby confirms receipt from the CCT of 1 (one) complete, signed copy of the Contract, including the *Schedule of Deviations* (if any) on:

The..... (Day)

Of..... (Month)

20..... (year)

At..... (Place)

For the Supplier: Signature(s) . . . . . .
Name(s) . . . . . .
Capacity . . . . . .
Signature and name of witness:

Signature . . . . . Name . . . . . .

C.3 OCCUPATIONAL HEALTH AND SAFETY AGREEMENT

AGREEMENT MADE AND ENTERED INTO BETWEEN THE CCT (HEREINAFTER CALLED THE "CCT") AND

……..……. ,
(Supplier/Mandatary/Company/CC Name)

IN TERMS OF SECTION 37(2) OF THE OCCUPATIONAL HEALTH AND SAFETY ACT, 85 OF 1993 AS AMENDED.

I, ……..……., representing

……..……. , as an employer in its own right in its own right, do hereby undertake to ensure, as far as is reasonably practicable, that all work will be performed, and all equipment, machinery or plant used in such a manner as to comply with the provisions of the Occupational Health and Safety Act (hereafter "OHSA") and the Regulations promulgated thereunder.

I furthermore confirm that I am/we are registered with the Compensation Commissioner and that all registration and assessment monies due to the Compensation Commissioner have been fully paid or that I/We are insured with an approved licensed compensation insurer.

COID ACT Registration Number: ……..

OR Compensation Insurer: ..... Policy No.: .....

I undertake to appoint, where required, suitable competent persons, in writing, in terms of the requirements of OHSA and the Regulations and to charge him/them with the duty of ensuring that the provisions of OHSA and Regulations as well as the Council's Special Conditions of Contract, Way Leave, Lock-Out and Work Permit Procedures are adhered to as far as reasonably practicable.

I further undertake to ensure that any subcontractors employed by me will enter into an occupational health and safety agreement separately, and that such subcontractors comply with the conditions set.

I hereby declare that I have read and understand the Occupational Health and Safety Specifications contained in this tender and undertake to comply therewith at all times.

I hereby also undertake to comply with the Occupational Health and Safety Specification and Plan submitted and approved in terms thereof.

Signed at .....on the.....day of.....20….

_____ _____
Witness **Mandatary**

Signed at..... on the.....day of.....20 ....

_____ _____
Witness for and on behalf of
CCT

C.4 PRICE SCHEDULE

Bid specifications may not make any reference to any particular trade mark, name, patent, design, type, specific origin or producer, unless there is no other sufficiently precise or intelligible way of describing the characteristics of the work, in which case such reference must be accompanied by the words “or equivalent”.

TENDERERS MUST NOTE THAT WHEREVER THIS DOCUMENT REFERS TO ANY PARTICULAR TRADE MARK, NAME, PATENT, DESIGN, TYPE, SPECIFIC ORIGIN OR PRODUCER, SUCH REFERENCE SHALL BE DEEMED TO BE ACCOMPANIED BY THE WORDS ‘OR EQUIVALENT”

Pricing Instructions:

5.1 State the rates and prices in Rand unless instructed otherwise in the Conditions of Tender.

5.2 Include in the rates, prices, and the tendered total of the prices (if any) all duties, taxes (except Value Added Tax (VAT), and other levies payable by the successful tenderer, such duties, taxes and levies being those applicable 14 days before the closing time stated in the General Tender Information.

5.3 All prices tendered must include all expenses, disbursements and costs (e.g. transport, accommodation etc.) that may be required for the execution of the tenderer’s obligations in terms of the Contract, and shall cover the cost of all general risks, liabilities and obligations set forth or implied in the Contract as well as overhead charges and profit (in the event that the tender is successful). All prices tendered will be final and binding.

5.4 All prices shall be tendered in accordance with the units specified in this schedule.

5.5 Where a value is given in the Quantity column, a Rate and Price (the product of the Quantity and Rate) is required to be inserted in the relevant columns.

5.6 The successful tenderer is required to perform all tasks listed against each item. The tenderer must therefore tender prices/rates on all items as per the section in the Price Schedule. **An item against which no rate is/are entered, or if anything other than a rate or a nil rate (for example, a zero, a dash or the word “included” or abbreviations thereof) is entered against an item, it will also be regarded as a nil rate having been entered against that item, i.e. that there is no charge for that item. The Tenderer may be requested to clarify nil rates, or items regarded as having nil rates; and the CCT may also perform a risk analysis with regard to the reasonableness of such rates.**

5.7 Rates and prices shall be subject to Contract Price Adjustment (CPA) in accordance with Clause 17 of the Conditions of Contract, as read together with the applicable provisions of the Special Conditions of Contract.

5.8. A rate of up to 8% on the invoiced price of outsourced repair work / buy outs will be allowed. This is the rate stated in the pricing schedule by the bidder. It is only applied to any outsourced repair work or buyouts which includes specialist items / components which needs to be acquired in the course of the work required by this tender. The handling fee is not applicable to in-house spares. This rate will be fixed for the duration of the contract.

5.9. The tendered “labour” rate is inclusive of normal hours, after hours, public holidays, weekends, expenses, disbursements and consumables costs that may be required for the execution of the tenderer’s obligations in terms of the contract, and shall cover the cost of all general risks, liabilities and obligations set forth or implied in the contract as well as overhead charges and profit (in the event that the tender is successful).

5.10. The City of Cape Town will assess the repair quote and if acceptable in terms of fairness, reasonability and market related cost for the buy-out, the City reserves the right to make use of their own internal procurement mechanisms

INITIALS OF CCT OFFICIALS		
1	2	3

CATEGORY 1: SUPPLY AND FITMENT OF VARIOUS ALUMINIUM STORAGE COMPARTMENTS						
Item No.	**Description**	**Unit**	**FIRM UNIT PRICE DELIVERED (EXCL. VAT)**			**Delivery period** from date of official Purchase Order in Weeks.
			Supply	**Fitment (Each)**	**Total = (Supply + Fitment)**	
1.1	7 Drawer unit (aluminium)	Each	R	R	R	Weeks
1.2	8 Drawer unit (aluminium)	Each	R	R	R	Weeks
1.3	5 Drawer unit (aluminium)	Each	R	R	R	Weeks
1.4	Additional Drawer Locking mechanism (8 Drawer)	Each	R	R	R	Weeks
1.5	Additional Drawer Locking mechanism (7 Drawer and 5 drawer)	Each	R	R	R	Weeks
1.6	Aluminium Chest Toolbox 2000 x 600 x 500mm	Each	R	R	R	Weeks
1.7	Aluminium Chest Toolbox 1500 x 600 x 500mm	Each	R	R	R	Weeks
1.8	Aluminium Chest Toolbox 1300 x 600 x 500mm	Each	R	R	R	Weeks
1.9	Aluminium Chest type compartment with removable inner lining (not exceeding 100 litre's)	Per Litre	R	R	R	Weeks
1.10	Aluminium Chest type compartment (not exceeding 600 litre's)	Per Litre	R	R	R	Weeks
1.11	Triangular type compartment (not exceeding 200 litre's)	Per Litre	R	R	R	Weeks
1.12	Link stick Holder 130 x 130 x 2000mm	Each	R	R	R	Weeks
1.13	Link stick Holder 200 x 130 x 2000mm	Each	R	R	R	Weeks

INITIALS OF CCT OFFICIALS		
1	**2**	**3**

CATEGORY 1: REPAIR AND REFURBISHMENT OF VARIOUS ALUMINIUM STORAGE COMPARTMENTS			
Item No.	**Description**	**Unit**	**FIRM UNIT PRICE DELIVERED (EXCL. VAT)**
1.14	Labour rate	Per Hour	R
1.15	Part buy-out for replacement parts	Mark up %	% (Max 8%)
1.16	Paint Material	Mark up %	% (Max 8%)

INITIALS OF CCT OFFICIALS		
1	**2**	**3**

CATEGORY 2: SUPPLY AND FITMENT OF VARIOUS ALUMINIUM SWOP BODYS, SUBFRAMES, CANOPIES AND ACCESSORIES: PB – Panel Body: LSF – Lower Sub frame						
Item No.	**Description**	**Unit**	**FIRM UNIT PRICE DELIVERED (EXCL. VAT)**			**Delivery period** from date of official Purchase Order in Weeks.
			Supply	**Fitment (each)**	**Total = (Supply + Fitment)**	
2.1	MV1-PB - 1 Ton LWB 4x4 and 4x2 Panel Body inclusive of the upper Sub Frame and Jack legs.	Each	R	R	R	Weeks
2.2	MV1-LSF - 1 Ton LWB 4x4 and 4x2 Lower Sub Frame assembly which includes the male twist lock assembly and connection to the vehicle chassis and built in rear step	Each	R	R	R	Weeks
2.3	MV2-PB - 2.5 Ton Double Cab truck 4x2 Panel Body inclusive of the Upper Sub Frame and Jack legs.	Each	R	R	R	Weeks
2.4	MV2-LSF - 2.5 Ton Double Cab truck 4x2 Lower sub frame assembly which includes the male twist lock assembly and connection to the vehicle chassis and built in rear step	Each	R	R	R	Weeks
2.5	50mm Ball pin type tow-hitch, 7 pin female plug and wiring harness. (Tow bar excluded)	Each	R	R	R	Weeks
2.6	One Ton single cab aluminium canopy	Each	R	R	R	Weeks
2.7	Half Ton single cab aluminium canopy	Each	R	R	R	Weeks
2.8	One Ton double cab aluminium canopy	Each	R	R	R	Weeks
2.9	Two drawer system	Each	R	R	R	Weeks
2.10	Heavy- duty roof rack One Ton single cab	Each	R	R	R	Weeks
2.11	Heavy- duty roof rack One Ton double cab	Each	R	R	R	Weeks
2.12	Jack leg	Each	R	N/A	N/A	Weeks

INITIALS OF CCT OFFICIALS		
1	**2**	**3**

CATEGORY 2: REPAIR AND REFURBISHMENT OF VARIOUS ALUMINIUM SWOP BODYS, SUBFRAMES, CANOPIES AND ACCESSORIES			
Item No.	**Description**	**Unit**	**FIRM UNIT PRICE DELIVERED (EXCL. VAT)**
2.13	Labour rate	Per Hour	R
2.14	Part buy-out for replacement parts	Mark up %	% (Max 8%)
2.15	Paint Material	Mark up %	% (Max 8%)

INITIALS OF CCT OFFICIALS		
1	**2**	**3**

C.5 SPECIFICATIONS CATEGORY 1

VARIOUS ALUMINIUM STORAGE COMPARTMENTS

INDEX

ITEM DESCRIPTION

1. SCOPE OF SPECIFICATION
2. APPLICABLE STANDARDS
3. BASIC REQUIREMENTS
4. 7 DRAWER
5. 8 DRAWER 2 COMPARTMENT
6. 5 DRAWER WITH FLIP UP LID
7. ALUMINIUM CHEST TOOLBOX
8. VARIOUS ALUMINIUM COMPARTMENTS.
9. LINK STICK HOLDER
10. COMPARTMENT CONSTRUCTION
11. FITMENT
12. WARRANTY

SPECIFICATION

1. SCOPE OF SPECIFICATIONS

1.1. This specification calls for the supply and fitment of adequate strength aluminium storage compartments in CCT vehicle load bodies that will be used in on and off road conditions within the geographical area of City of Cape Town.

1.3 All documentation including that of the tender submission such as OEM brochures, technical drawings etc. must be in the English language and properly assembled in an appropriate lever arch file with clear labels indicating the various sections.

1.4 All documents submitted must in addition be scanned in PDF format and be submitted on a standard USB flash drive that is to be clearly labelled with the bidders company name, tender number and description.

2 APPLICABLE STANDARDS

The list below is not to be construed as a complete list. The latest version or amendments thereof supersedes the standards or equivalent standards applicable to this specification: -

2.1. SANS 1274:2005: Coatings applied by the powder-coating process

2.2. SANS 1700-5-1:200: Fasteners Part 5: General requirements and mechanical properties

2.3. SANS 1700-5-8:2003: Fasteners Part 5: General requirements and mechanical properties Section 8: Mechanical properties of corrosion-resistant stainless-steel fasteners - Bolts, screws and studs

2.4. SANS 5775:2004: Preparation of steel substrates before the application of paints and related products – Surface roughness characteristics of blast-cleaned steel surfaces

2.5. SANS 10064:2005: The preparation of steel surfaces for coating

2.6. All preparation and finishing work on the additional locking mechanisms must comply with the Aluminium Federation of South Africa (AFSA) Standards.

3. BASIC CONSTRUCTION

3.1. All storage units specified below are to be manufactured with a suitable aluminium skeletal rigid frame with a structural strength equal to or improving on frame made of 25x25x2mm square tubing.
All cover plates, drawers and lids are to be manufactured from 1.6mm thick aluminium.

3.2. Full size non-slip, anti-scuff drawer liners and locks are to be included in all drawer units.

3.3. Inner and outer chassis panels are not to be less than 1.6mm aluminium.

3.4. The drawers are to be fitted with heavy duty ball bearing drawer slides able to safely withstand a mass of at least 50kg.

3.5. Full length heavy duty handles are to be incorporated into the drawers.

3.6. The tenderer is to offer the units mentioned below in a powder coated finish. The storage units are to be preferably finished in standard gloss (e.g. black, blue and red) using a durable powder coating or equivalent process offering suitable protection against scuffing and corrosion.

3.7. Drawings clearly showing all relevant dimensions must be provided.

3.8. Additional drawer locking mechanism is required on all toolbox drawer units . See **ADDENDUM D:**

3.8.1. 7 and 8 drawer units must be fitted with two locking mechanisms, with one on each side of the toolbox.
3.8.2. Big 5 and small 5 drawer units must be fitted with one locking mechanism on the left side of the toolbox.
3.8.3. The additional drawer locking mechanism must be manufactured from 3mm aluminium sheet and must cover the height of applicable tool box. The width must be of adequate length to incorporate locking mechanism and withstand imposed operational loads or stresses.

4. 7 DRAWER

4.1. The tenderer is to offer a 7 drawer side by side split storage unit with a flip up top lid incorporating a hydraulic lifter offering smooth operation. The lid is to have a sturdy heavy duty aluminium hinges with nylon bushes.

4.2. The drawer configuration sizes are as per drawing and picture in **ADDENDUM A**.

4.3. The approximate overall dimensions of the storage unit is:
Width: 1030 – 1040 mm
Depth: 440 – 460 mm
Height: 525 – 560 mm

5. 8 DRAWER 2 COMPARTMENT

5.1. The tenderer is to offer an 8 drawer side by side split storage unit incorporating 2 fixed compartments located at the top of the unit.

5.2. The configuration, drawer and compartment sizes are as per drawing and picture in **ADDENDUM B**.

5.3. The approximate dimensions of the storage unit are:
Width: 1030 – 1040 mm
Depth: 480 – 500 mm
Height: 840 – 860 mm

5.4. A compartment at the top of the unit is approximately 223 mm in height with a robust hinged, drop down lockable front lid able to rotate at least a minimum of 120 degrees to max of 180 degrees. See ADDENDUM B

6. 5 DRAWER 1 HINGED FLIP UP LID

See **ADDENDUM C**

6.1. It is a requirement that the toolbox, be fixed in the position shown, but that it is to be easily removable if necessary. In this regard some form of quick release mechanism needs to be incorporated in the tended price.

6.2. The approximate dimensions of the storage unit are:-
Width: 680 – 700 mm
Depth: 450 – 465 mm
Height: 540 – 550 mm

6.3. The drawer sizes as follows:
4 top drawers of equal height
1 lower drawer of approximately Height 150 mm
1 hinged top lid (full width and depth)

6.4. The hinged lid is to include a lid stay to keep the lid in a 90° open position.

6.5. Full size non-slip, anti-scuff drawer liners and locks are to be included.

6.6. Inner and outer chassis panels are not to be less than 1.6mm thickness.

6.7. Full length heavy duty handles are to be incorporated into the drawers.

6.8. A heavy duty handle should be incorporated to each upper side of the toolbox.

7. ALUMINIUM CHEST TOOLBOX

7.1. This section calls for the manufacturing of aluminium chest toolboxes (See **ADDENDUM F**). to the following sizes:

Aluminium Toolbox 2000 x 600 x 500mm
Aluminium Toolbox 1500 x 600 x 500mm
Aluminium Toolbox 1300 x 600 x 500mm

7.2. The toolboxes should be manufactured out of 2mm grade 6061 aluminium checker plate sheeting.

7.3. Toolbox lid may be utilised as walkways and thus the structure and lids must be sufficiently robust to withstand this application without any type of deformation.

7.4. All structural joints should be tig welded the full length of the joint. (Full welds).

7.5. The Toolbox must be protected from limited dust ingress, low pressure water jets from all directions. (IP55)

7.6. The toolbox must have 2x drainage holes in the floor

7.7. Each toolbox will have two lids that can open individualy

7.8. The toolbox lids will either have a 50/50 or 70/30 split of the entire toolbox length

7.9. Each lid should be fitted with two heavy duty gas struts

7.10. Each toolbox lid should be fitted with a adjustable stainless steel toggle latch (ADDENDUM F).

7.11. The Toolbox underside should be insulated with a slip proof coating to avoid friction caused by metal to metal (Steel/Aluminium) contact.

8. VARIOUS ALUMINIUM COMPARTMENTS (Items 1.9, 1.10, 1.11)

8.1. This section calls for the manufacturing of various shaped compartments to various dimensions as per operational requirements.

8.2. The tenderer is to offer a chest type compartment and a triangle type compartment that will comply to the following specifications

8.3. These compartments must be customizable in height, width and length and must be made to the dimensions as specified by a designated City of Cape Town official at time of order.

8.4. The pricing for this compartment must be offered based on cost per litre in the Pricing Schedule Item 1.9(not exceeding 100 litres), Item 1.10(not exceeding 600 litres) and Item 1.11 (not exceeding 200 litres).

8.5. The toolboxes should be manufactured out of 2mm grade 6061 aluminium checker plate sheeting.

8.6. The chest type compartment must be available with an easily removable inner lining with collapsible handles for cleaning and waste removal for item 10 in the pricing schedule only.

8.6.1. The removable inner lining must be constructed with 2mm grade 6061 aluminium and must be sturdy enough to withstand the operational forces to which it may be exposed when fully laden with street bulbs and related waste material.

8.6.2. This removable inner lining must be appropriately insulated and have Teflon guides to prevent friction and chafing from the outer body of the container.

8.7. The complete units must be robustly manufactured as it may be utilized as a walk way and thus it must be able withstand this application without any type of deformation

8.8. All structural joints should be tig welded the full length of the joint. (Full welds).

8.9. The compartment must be protected from limited dust ingress, low pressure water jets from all directions. (IP55)

8.10. Each compartment will have two lids that can open individually if the entrance is equal to or more than 1m in width and one single lid if the entrance width is less than 1m

8.11. The entrance sizes will be provided by the City of Cape Town official upon the order of the toolboxes

8.12. Each lid should be fitted with two heavy duty gas struts

8.13. The compartment underside should be insulated with a slip proof coating to avoid friction caused by metal to

metal (Steel/Aluminium) contact.

8.14. Each compartment lid should be fitted with a adjustable stainless steel toggle latch (ADDENDUM F).

8.15. The hinge and latch area must be adequately reinforced with an additional wear pad under the locking mechanism to prevent damage to the outer skin by the pad lock.

9. LINK STICK HOLDER

9.1. This section calls for the manufacturing of aluminium link stick holders to the following sizes:

Aluminium Link Stick Holder 130 x 130 x 2000mm: (Item 1.12)
Aluminium Link Stick Holder 200 x 130 x 2000mm: (Item 1.13)

9.2. The Link Stick Holder should be manufactured out of 2mm grade 6061 aluminium checker plate sheeting or equivalent.

9.3. All structural joints should be tig welded the full length of the joint. (Full welds).

9.4. The Link Stick Holder must be protected from high pressure water jets from any direction, limited ingress protection. Must conform to IP66 rating to ensure content will not be water damaged.

9.5. The Link Stick Holder must be fitted with a single hinged and lockable lid on the end for the ease of storing and removing of link stick's.

9.6. The lid should have a stainless steel latch type locking mechanism and must be supplied with a suitable sized yale (or equivalent quality) pad lock.

9.7. The Link Stick holder must be fitted with removable foam like inner lining that is durable and sturdy enough to withstand the operational forces to which it may be exposed during storage and removal of Link Sticks.

9.8. The Link Stick holder must be mounted to the roof rack of the vehicle, unless otherwise instructed by a designated City of Cape Town official.

10. COMPARTMENT CONSTRUCTION

10.1. Existing tool chests may be modified to incorporate compartments i.e. drawers taken out, a compartment pressed or fabricated from appropriate steel sheet, ball bearing sliders are attached to the sides and walls and finished off with a suitable hinged face panel matching the finish of the tool chest.

10.2. The compartments are to incorporate drop down lids securely hinged using robust aluminium hinge with a nylon bush at the bottom, a 30mm lip set back 10mm from the hinge and provided with a full length handle equivalent to the handles on the drawers below.

10.3. The compartment so constructed must function then as a simple compartment as well as be able to slide out as a normal drawer. Compartment must only be able to slide out when hinged face panel is opened.

10.4. The compartments are to be lined with 3mm insertion rubber.

10.5. The construction must in all instances be in accordance with standard South African steel construction engineering practices and be able to contain a distributed load of 50kg without deformation.

11. FITMENT

11.1. The units are to be securely fitted onto the CCT vehicle floors using approved fasteners bearing in mind the dissimilar metals to be bonded and possible corrosion occurring and using existing OEM threaded ports.

11.2. Should the OEM supplied anchor points be deemed insufficient, the tenderer will be allowed to drill into the vehicle body. The tenderer must obtain OEM approval and must not effect the manufacturers corrosion warranty.

11.3. In addition to OEM approval the tenderer must consult with the designated City of Cape Town Official prior to drilling any holes in the vehicles body and chassis.

11.4. The designated City of Cape Town official reserves the right to inspect the holes to ensure that the holes are sufficiently treated against corrosion.

11.5. In the installation of the equipment and floorboard; only corrosion resistant bolts, nuts, washers and screws must be utilised.

11.6. The fasteners are to ensure that the storage unit offered is kept firmly in position whilst in normal operation of the vehicle.

11.7. The fitment of the equipment into the CCT vehicle load bodies must in no way compromise neither the structural strength nor the warranty conditions applicable to the vehicle.

11.8. In this context, any damage to the vehicles structure resulting from the fitment process will be for the account of the tenderer.

11.9. All fitment methods must be approved by a representative of the City of Cape Town.

12. WARRANTY

12.1. The storage units must be covered under full and valid factory warranty and the fitted storage units must be fully guaranteed by the tenderer for at least 2 years against any defects or faulty workmanship under normal conditions (abuse, fair wear and tear excluded).

12.2. All copies of signed factory warranty documents as well the guarantee document must be supplied on delivery and be in force from the date of delivery.

12.3. Tenderers are expected to accept full responsibility for the complete fitted storage unit and must be able to service any warranty claims and guarantees offered by their subcontractors.

ADDENDUM A - 7 Drawer units with flip up lid
<u>Dimensions are approximate.</u>

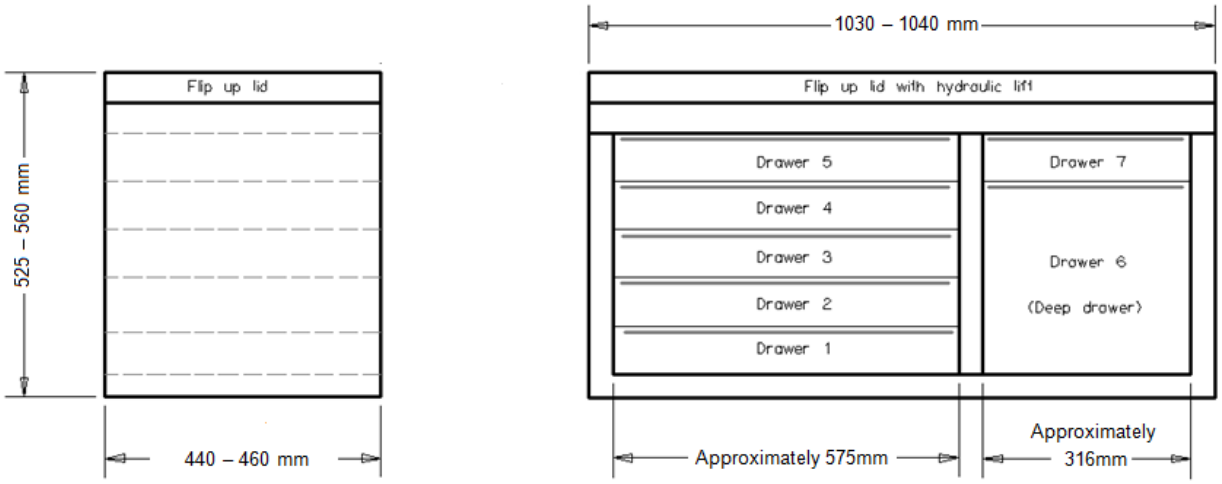

Drawers 1 - 5 and 7 are equal in size not less than 54mm in height. Drawer 6 is a deep drawer not less than 270mm in height.



ADDENDUM B - 8 Drawer 2 Compartments
Dimensions are approximate.

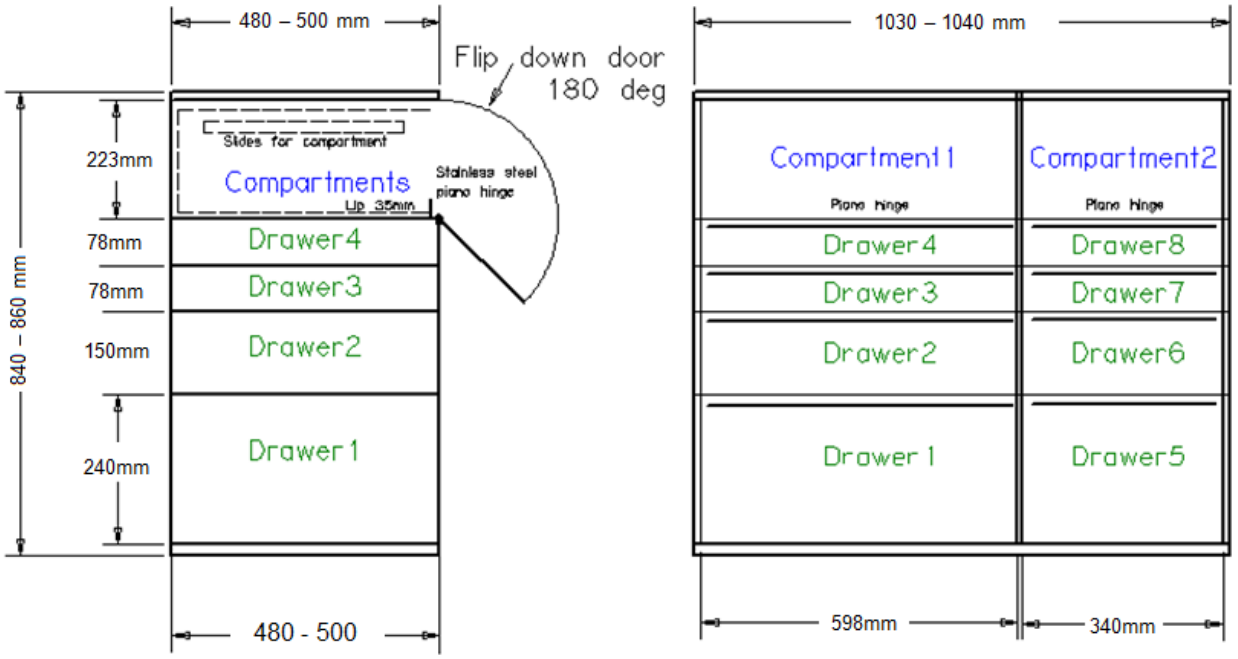

ALL DRAWER DIMENSIONS ARE APPROXIMATE



ADDENDUM C - 5 Drawer toolbox with hinged top lid.
<u>Dimensions are approximate.</u>

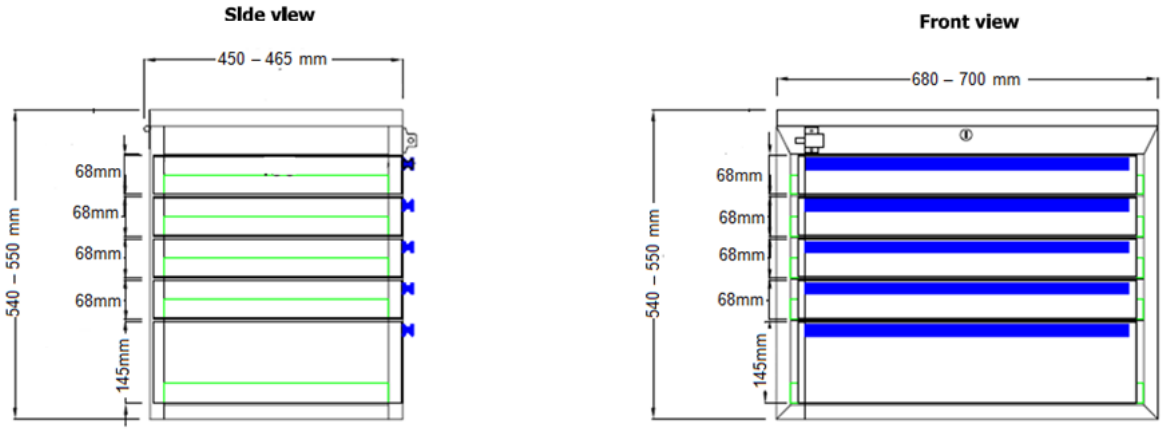



Tenderers to use existing OEM threaded ports to fix the box in position. The fixing method must incorporate some form of quick release mechanism

ADDENDUM D - Additional locking mechanism





ADDENDUM E – Drawer Latch



ADDENDUM F – ALUMINIUM CHEST TOOLBOX

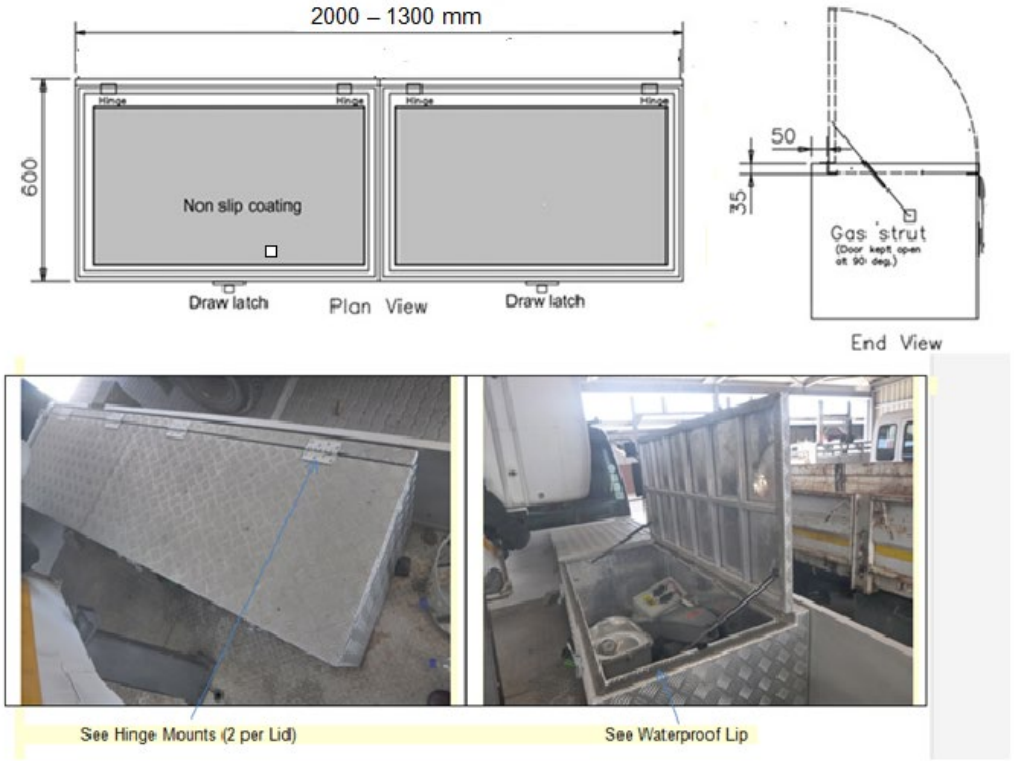

C.5 SPECIFICATIONS CATEGORY 2

VARIOUS ALUMINIUM SWOP BODYS, SUBFRAMES, CANOPIES AND ACCESSORIES

ITEM DESCRIPTION

Scope of Specification

1. Applicable Standards
2. Panel Body Swop Body
3. Lower Sub Frame
4. Upgrade of The Rear Springs
5. Jack Legs
6. Payload Requirements
7. Aluminium Canopies
8. Two Drawer System
9. Heavy- Duty Roof Rack
10. 50 Mm Ball Pin Tow Hitch and Aluminium 7 Pin Trailer Plug
11. Paint Specification
12. Guarantees
13. Maintenance
14. Warranty
15. Spares
16. General
17. Delivery

SCOPE OF SPECIFICATION

This specification calls for the supply and fitment of:

1. One (1) Ton single cab LWB (4x2, 4x4) to be fitted with Aluminium Swop Bodies (Panel Bodies) or Aluminium Canopies.

2. 2.5 Ton Crew Cab Truck with an approximate GVM of 5200 kg to be fitted with a removable Aluminium Swop Body (Panel Body)

3. Half ton LDV to be fitted with Aluminium Canopies only.

4. One (1) Ton LDV Double Cabs to be fitted with Aluminium Canopies.

In each case mentioned above, the stated vehicle categories or an equivalent (where applicable) chassis is to be utilised in the tender offering for the optional swop bodies. The chassis cabs will be supplied. All dimensions stated in the text and on drawings are approximate. The vehicles are required for the City of Cape Town's general infrastructure maintenance. The supplied Aluminium Swop bodies shall be designed for and be capable of efficient and satisfactory operation under all South African weather conditions.

PROFESSIONAL PDF DOCUMENTS

All documentation including that of the tender submission such as OEM brochures, technical drawings etc. must be in the English language and properly assembled in an appropriate lever arch file with clear labels indicating the various sections.

All documents submitted must in addition be scanned in PDF format and be submitted on a standard USB flash drive that is to be clearly labelled with the bidders company name, tender number and description.

In the event of any discrepancy between the electronic copy and the physical document, the physical document shall prevail.

TERMS

The term "Swop Body" will be used in the text of the technical specification and will mean Aluminium Swop Body.

2. Applicable Standards

The list below is not to be construed as a complete list. The latest version or amendments thereof supersedes the standards or equivalent standards applicable to this specification: -

1.1. SANS 1329-1:2004: Retro-reflective warning signs.
1.2. SANS 20104: Reflective taping.
1.3. SANS 1700-18 4:2004 / ISO 15973:2000: Rivets
1.4. SANS 10064:2005: The preparation of steel surfaces for coating.
1.5. SANS 12944-4,5 :1998: Corrosion protection.
1.6. SANS 926:1968 (2000-09-08): Two pack zinc-rich epoxy primer
1.7. PIESA 1102:2004: Corrosion protection of fabricated equipment
1.8. SANS 10305-5:2005 3.3.1.4. : Paint preparation (Steel sub frame)
1.9. South African Road Traffic Act (Act 89 of 1989) and related road ordinances.
1.10. Occupational Health and Safety Act No. 85 of 1993 and associated General Machinery Regulations.
1.11. All preparation work, welding and finishing on canopies must comply with the Aluminium Federation of South Africa (AFSA) Standards.
1.12. SABS 1327 – 1981 and ISO 1724: Standard wiring pattern for 7-pin plugs
1.13. The decals should comply with SANS standard. (SANS 1186-1: 2011 & SANS 10233 or the latest versions thereof) Standard signs and general requirements.

2. **Panel Body Swop Body**

2.1. A lightweight Aluminium Panel Body fitted with a 3 bar ladder rack is to be constructed and fitted to an Upper Sub Frame made of Domex 700 or Strenx 700MC (or equivalent). The Panel Body will be fitted to the lower Sub Frame as specified which is fitted to the chassis' mentioned in the scope of the specification above.

2.1.1. The tenderer is to ensure the Panel Body and the dimensions are legal and compatible structurally and aesthetically with that of the chassis fitted to as well be closely similar in appearance to the existing compliment of Panel Bodies in the Electricity Generation and Distribution Department. The overall swop body dimensions offered on vehicles stated (or similar) are approximately:

2.1.1.1. MV1-PB (4x4,4x2 LWB LDV 1 Ton)
2280 X 1650 X 1040 (mm) L W H

2.1.1.2. MV2-PB (2.5 Ton D/Cab truck - Isuzu NMR 250 Crew or similar)
3100 x 1900 x 1400 (mm) L W H

2.1.2. The Panel Body height with respect to the top of the chassis cab must not be greater than 270mm.

2.2. The attachment and removal procedures of the Panel Body to and from the vehicle chassis must be such that a driver and one staff member can accomplish it with ease with no possibility of damage being sustained by any cabling, wiring or any of the mating structures. The removal or re attachment procedure of the Panel Body must not take more than 5 minutes for each procedure.

2.3. A basic concept schematic has been included in **Addendum G and H.**

2.4. The Panel Body is to be constructed from bolted; pop riveted and interlocked hollow box section and components with flip up lockable doors on 3 sides. The flip up doors are to be fitted with robust gas struts. The door opening and the position of the struts must not negatively affect the use of the toolboxes which are to be fitted in the side door openings on the cab side.
The door opening dimensions must be approximately:

One (1) Ton Single Cab: **Side Door Openings-**
Width 1050 mm
Height 860 mm
Rear Door Openings-
Width 850 mm
Height 860 mm

2.5 Ton Crew Cab: **Side Door Openings-**
Width 1050 mm
Height 1060 mm
Rear Door Openings-

Width 1100 mm
Height 1060 mm

2.4.1. The door side must be reinforced with stainless steel strips where the locking pins locate when in locking position to prevent wear on the aluminium due to friction caused by opening or closing of the doors.

2.5. The Panel Body floor must be made of aluminium material that is light in weight but will provide sufficient mechanical strength for the fitment of toolboxes as mentioned in clause 2.4.

2.6. The Panel Body must be complete in all respects and fitted to the vehicle in such a way that it is in full compliance with the traffic ordinances, tyre pressures restrictions and with correct mass distribution.

2.7. Tenderers are to include a working drawing of the Panel Body placed on the respective vehicles illustrating pertinent dimensions.

2.8. The Panel Body is to be supplied with a standard single level roof rack capable of accommodating a minimum load of 150 kg as standard fitment.

2.8.1. The lightweight yet robust, Panel Body fitted with a 3 bar roof rack is to accommodate standard width ladders spanning the width of the Panel Body must be fitted with a centre partition and rear rubber roller bars with roller bearings. All tube ends to be blanked off neatly with plastic end caps.

2.8.2. All steel roller bars must be protected against corrosion.

2.9. Two heavy-duty ratchets with straps must be fitted on each side of the roof rack. The roller and the four ratchets must be included in the price of the roof rack.

2.10. The Panel Body type MV1-PB and MV2-PB must be supplied and fitted with a rear decal. The price of the supply and fitment must be included in the total price of the Panel Body.

2.10.1. The rear decal should be 3M red diamond engineering grade tape or 3M yellow diamond engineering grade tape or equivalent standard with a marking code of 983-71ECE. See Addendum S.

2.11. Panel Body Upper Sub Frame

2.11.1. The Panel Body is to incorporate a robust yet lightweight Upper Sub Frame designed to withstand the weight of the Panel Body as well as all imposed forces and is to be attached to the fitted Lower Sub Frame and chassis according to the vehicle manufacturer's fitment standards. The use of Domex 700 or Strenx 700MC (or equivalent) is preferred to reduce the mass of the sub frame components. See **Addendum J** for typical plan view

2.11.2. The sub frame is to comprise of an upper sub frame which is firmly bolted to the Panel Body under surface and to which the female sections of the locking devices are attached. The upper sub frame structure also incorporates the four jack leg systems and must be included in the price of the Panel Bodies (section 6 of this specification). The separate lower sub frame is mounted to the vehicle chassis and to which the male locking devices are attached. The alignment points for the locking devices are to be standardised for each type of vehicle so that similar swop bodies (Panel Bodies and Drop Side Bodies) are interchangeable. The drawings requested for in Clause 2.7 must show the alignment points and tolerances to facilitate the interchangeability.

3. Lower Sub Frame

3.1. The Lower Sub Frame must be designed to withstand the weight of the Panel Body and fitted accessories as well as all imposed forces and is to be fitted to the chassis according to the vehicle manufacturer's fitment standards. The use of Domex 700 or Strenx 700MC (or equivalent) is preferred to reduce the mass of the Lower Sub Frame. The Lower Sub Frame must be compatible with the specification types MV1-PB and MV2-PB See **Addendum J** for typical plan view

3.2. The drawings submitted with the tender documents must indicate clearly the general layout as well as the class of fasteners used.

3.3. The fitment of the sub frame onto the chassis must be done according to the vehicle manufacturer's specifications.

3.4. The rear tail light arrangement must be of aluminium construction, painted black and fitted to the swop body sub frame adapter plate and incorporate LED lights throughout (tail, stop, indicator and reverse).

3.5. The fitment of such LED lights must not alter the indicator flicker rate from that set by the OEM standards. The flashing rate is to be restored by means of an electronic flasher unit rather than load resistors bearing in mind OEM approval of the fitment.

3.6. Retro reflectors must be fitted to the rear and sides of the adapter plate. Two red reflectors to the rear and two orange reflectors on each side.

3.7. The fuel filler pipe must mount to a robust bracket and finished off with hinged lockable cover plate. The arrangement must be match the aesthetics of the vehicle to which the swop body is mounted. The arrangement must be indicated on the drawing mentioned in Clause 2.7.

3.8. Robust mud guards and flaps must be fitted to the sub frame to prevent damage to the under carriage. These must be centrally positioned and be aesthetically pleasing. Mud guards must be manufactured from 3CR12.

3.9. A rear step must be manufactured and installed onto the one (1) Ton LDV's Single Cabs and the 2.5 Ton Double Cabs for the Swop Body specification types MV1-PB, MV2-PB, MV1-DS and MV2-DS

3.10. The rear step should be manufactured from 60mm x 2mm grade 300W mild steel tubing spanning the full width of the vehicle.

3.11. The rear step should have a hot dipped galvanised 3mm tread plate mounted with 10mm dome head galvanised bolts and lock nuts. The tread plate is to span the full width of the vehicle and be approximately 150mm in width with a 20mm 45 degree off set. (See **Addendum L**)

3.12. Should the vehicles OEM rear bumper be fitted parking distance sensors, the Tenderer will be required to remove and retro fit these sensors on to the rear step, utilising the standard wiring harness and functioning as per OEM intent. This cost of this retro fitment must be incorporated in the panel body (MV1-PB and MV2-PB) total cost.

3.13. The main supporting brackets will need to be extended by ± 100 mm for a standard tow bar to accommodate the overhang of the swop body. Gussets should be welded in place on each side to strengthen the extended brackets.

3.14. The rear step should be coated with black Carbozinc 859 as first coat or similar with a minimum dry film thickness of 125µ. (Follow paint manufacturer's instructions).

3.15. The rear step should be coated with black Carbothane 133HB as second coat or similar with a minimum dry film thickness of 125µ. (Follow paint manufactures instructions)

3.16. If similar paint is used the manufacturer's specification should be supplied.

3.17. The rear step should be must be designed and manufactured to act as a tow bar. All plating with holes drilled to accommodate a 50mm ball pin tow hitch and wiring harness should be supplied. (See **Addendum M**)

3.18. The pipe ends should be blanked off with black PVC plugs. The plugs should be silicone sealed into place.

3.19. See **Addendum H and L** for the Rear bumper/ step arrangement for the 2.5T truck

4. Upgrade Of The Rear Springs

4.1. The upgrade of the rear leaf springs of the one (1) Ton LDV Single Cabs must be included in the price of the applicable swop body specification type MV101-PB.

4.2. Only an OEM approved spring fitment centre must be utilised for the upgrade of the springs.

4.3. A covering letter from the OEM stating that the upgrading of the springs will not affect the warranty conditions of the vehicle must be supplied on delivery of the equipment.

4.4. The rear springs of the one ton LDV's single cab must be reset and reinforce by adding two extra blades.

5. Jack Legs

5.1. Four supporting height adjustable steel jack legs are to be provided which will support the swop body types when removed from the vehicle chassis. Easily removable jack leg cross bracing is to be incorporated for stability.

5.2. The jack legs support brackets attached to the swop body Upper Sub Frame must be of robust design. The jack leg and supporting brackets must be able to safely withstand a load of at least 10KN each.

5.3. The jack legs must be fitted with foot pads of sufficient dimension to evenly distribute the weight of the aluminium swop body and maintain stability on firm as well as soft ground.

5.4. A facility must be incorporated to allow easy removal of the pads and replacement with heavy duty industrial swivel castors which will allow the swop bodies to be moved with minimal effort.

5.5. The Jack leg vertical extensions must be fitted with a spring-loaded locking device to prevent over extension. This will also ensure that there is no unintentional vertical movement. (See Addendum U)

5.6. The tenderer is to provide two stabilizing bars that will attach the two outrigger legs on either side of the swop body and provide the necessary rigidity when the swop body is parked without its vehicle. (See **Addendum V**)

5.7. The stabilizing bars must be easily attachable and removable by one operator.

6. Payload Requirements

The payload capacity required for each chassis is stated below in a mass distribution diagram. The payload shall take into account the mass of the aluminium swop body, including the upper swop body and lower sub frame assembly, single ladder rack and supporting jack legs. In all cases, the mass of fully laden aluminium swop body vehicle combination with specified payload must be such that the vehicle is safe for use under all operating conditions.

7. Aluminium Canopies

See **Addendum H** for typical canopy layout.

7.1. The canopy should not be higher than the cab of the vehicle. The cab height on a one ton LDV is ± 510 mm above the top of the pay load body.

7.2. The canopy should not be wider than the vehicles payload. The width of the payload on a one ton LDV is ± 1600mm from side lip to side lip of the payload. (Double and single cabs)

7.3. The canopy should not be longer than the vehicles payload. The length of the payload on a single cab one ton LDV is ± 2250mm and ± 1550 mm on a double cab from the front lip to the rear lip of the payload.

7.4. The canopy should be fitted with a low profile aluminium roof rack. The roof rack should not be higher than 50mm of the cab of the vehicle. (See **Addendum O**)

7.5. The front and rear of the canopy should be fitted with a window ±350mm high x ±1000mm wide.(See **Addendum N**)

7.6. The successful tenderer must confirm final dimensions with the City Of Cape Town officials before the manufacture of the canopy and roof rack.

7.7. The canopy should be manufactured out of 2mm grade 1050 anodized aluminium chequer plate sheeting.

7.8. The chequer plate should be fastened to the main structure with a polyethylene type weld / glue sealer.

7.9. The main structural members should be grade 6063 aluminium extrusions 50mm x 25mm x 2mm.

7.10. All structural joints should be tig welded the full length of the joint. (Full welds).

7.11. All seal rebates should be bent up sections of grade 1050 3mm aluminium sheet.

7.12. All seals should be automotive grade pinch weld seals.

7.13. The canopies on the one ton LDV's should have two equally sized flip up doors per side covering the full length of the side of the canopy and a single door should be fitted per side of the half ton LDV (See **Addendum N**)

7.14. The canopy should have a single flip up rear door covering the complete rear of the canopy above the tail gate. (See **Addendum N**)

7.15. The canopy window should be fitted with 6mm shatter proof glass and suitably aesthetically fitted burglar bars on the inside of the windows

7.16. The rear door window should be fitted with a burglar bar. The burglar bar should be manufactured from 20 mm aluminium flat bar and firmly fixed to the canopy structure with appropriate fasteners.

7.17. Each door should be fitted with:

- Two heavy duty gas struts.
- Two heavy duty aluminium hinges.
- A pinch weld seal.
- Two heavy duty waterproof locks. Only one lock is required on the side doors for double cabs.
- Each lock should have a unique key combination.

7.18. The roof rack should be manufactured from 50mm x 25mm x 2mm extrusion 6063 aluminium.

7.19. The canopy should have a minimum of six tie-downs points three on each side for stabilizing the load.

7.20. **Aluminium Canopy Fitment**

7.20.1. A waterproof rubber seal should be fitted between the canopy and the payload and the cab and the canopy to prevent water and dust entering.

7.20.2. The canopy should be attached to the payload with zinc plated Grade 8, 8mm x 25mm steel bolts, nuts and washers spaced a minimum of 300mm around the complete contact area.

8. Two Drawer System

See **Addendum R** for typical two drawer system layout.

8.1. The final design of the two drawer system should be universal to the half-ton LDV, double cab one ton LDV and the single cab one ton LDV vehicles.

8.2. The estimated dimensions of the universal two drawer system should be ± length 1400mm, width 1000mm and height 300mm. Final dimensions must be taken from the actual vehicle type and fleet number on the order.

8.3. The frame should be manufactured from 25x25x2mm aluminium square tube and 50x25x2mm aluminium rectangular tubing.

8.4. The drawers should be manufactured from 2mm plain aluminium sheeting.

8.5. The drawer should be mounted to the frame with heavy duty ball bearing runners with a weight holding capacity not less than 80 kg per runner.

8.6. The drawer face should be cladded with aluminium tread plate

8.7. The side open ends on the vertical face of the rear frame should be cladded with aluminium tread plate

8.8. Each drawer should have a T–handle lock type fitting or similar fitted with a unique key.

8.9. Each drawer should have two partitions; the position of the partition will be confirmed with on the order.

8.10. The entire structure of the two drawer system should be fitted to the payload between the wheel arches and in line with the rear of the vehicle when the tailgate is closed. The unit should be squared with four adjustable tie downs to the OEM payload anchor points. (**Addendum R**)

9. Heavy- Duty Roof Rack

See **Addendum O** for single and double cab one (1) Ton LDV layout.

9.1. A heavy-duty roller must be fitted at the rear of the roof rack.

9.2. Two heavy-duty ratchets with straps must be fitted on each side of the roof rack.

9.3. The section of the roof rack over the cab must be reinforced.

9.4. The roller and the four ratchets must be included in the price of the roof rack.

10. 50 Mm Ball Pin Tow Hitch And Aluminium 7 Pin Trailer Plug

10.1. Tenderer must supply and fit a 50mm ball pin type tow hitch with a 7 pin female plug and wiring harness. The wiring harness must conform to OEM standards. This does not include the Tow bar as the rear step configuration must be designed to function as a tow bar (See Addendum M and L).

11. Paint Specification

11.1. All steel components attached to the Swop Body Types must ideally be galvanized and appropriate silicone sealant used to cover mating surfaces where aluminium and galvanized components are connected.

11.2. Paint preparation (Domex 700 or Strenx 700MC or equivalent steel sub frame). Power clean as per SANS 10305-5:2005 3.3.1.4. or abrade to SA 2½ with 75 microns profile.

11.3. Primer (Domex 700 or Strenx 700MC or equivalent steel sub frame). A metal etch primer Duram NS5 Metcote or equivalent is to be used, followed by a water based acrylic metal primer i.e. NS4 or equivalent.

11.4. Top Coat (Domex 700 or Strenx 700MC or equivalent steel sub frame). The top coat shall be Carboguard 890 epoxy paint or equivalent.

11.5. The above paint specification must offer resistance to corrosion for at least 3 years

11.6. Paint preparation (Aluminium components). Lightly abrade to fresh metal and apply an etch primer Duram NS5 Metcote or equivalent.

11.7. Top Coat (Aluminium components). A propriety quality commercial vehicle coating Acryline 2K or similar – factory standard white.

12. Guarantees

12.1. The tender or his subcontractor is to have the necessary capacity and expertise to fulfil all contractual requirements and to service all warranty claims.

12.2. The City Of Cape Town reserves the right to inspect the tenderers manufacturing facility.

13. Maintenance

13.1. The Tenderer or his accredited agent is required to provide a complete maintenance service to the structure of the aluminium swop body and aluminium canopies and all accessories for the duration of the warranty period as and when required.

13.2. The fitment and repair workshop utilized for the duration of this contract must situated as per clause 36 (including sub clauses) of the special conditions of contract.

13.3. The City of Cape Town reserves the right to inspect the workshop facilities offered. (Manufacturing and/or repairs and maintenance facility)

14. Warranty

14.1. The Swop Body types, Aluminium Canopies and accessories must be fully guaranteed for at least 5 years; the structural integrity must be guaranteed for at least 5 years and guaranteed against body rust or paint defects for at least 5 years (abuse, fair wear and tear excluded).

14.2. Tenderers are expected to accept full responsibility for the complete swop body and must under-write any guarantees offered by their sub-contractors.

14.3. All paint (including primer, paint coat and clear coat) to carry a minimum of three (3) year warranty.

14.4. Tenderers are expected to accept full responsibility for the complete swop body and must under-write any guarantees offered by their sub-contractors.

15. Spares

15.1. Individual components when used in the supplied swop bodies shall be new, of the same make, type or series for each item. Standardisation and mutual interchangeability of components is essential.

16. **General**

16.1. A general arrangement drawing of the vehicle complete with equipment and aluminium swop body, showing all essential features, dimensions and weight distribution must be submitted with the offer.

16.2. Essential operator's tools must be provided. The jacking leg tools must be stored in a suitable container located in an appropriate area in the swop body.

16.3. Manuals in the English language are to be included in the price and must be comprehensive and include details of all components of the swop body. The following manuals are required :

- Operating Manual
- Parts Manual

17. Delivery

17.1. The tenderer is responsible to obtain SANS certification (homologation) for the Panel Body and chassis combination including the drop side load body options for the One (1) Ton Single Cab (4x2 and 4x4) to enable reregistering of the units.

17.2. The 2.5 Ton double cab truck must be registered as a "skeletal" type vehicle.

17.3. The swop bodies must be delivered along with all necessary vehicle documentation as well as weighbridge certificates indicating front and rear axle load as well as total mass.

17.4. Tenderers must specify dispatch period after receiving an official Purchase Order, clearly stating the lead-time for completion

17.5. The fitted aluminium swop bodies are to undergo a comprehensive pre-delivery inspection (PDI) prior to being delivered to the specified site on the Purchase Order.

ADDENDUM G

MV1-PB: ONE (1) TON SINGLE CAB PANEL BODY

The swop body configurations offered must be similar in appearance for the purposes of uniformity to similar swop body vehicles in the ELECTRICITY GENERATION AND DISTRIBUTION DEPARTMENT Fleet. The dimensions are approximate.

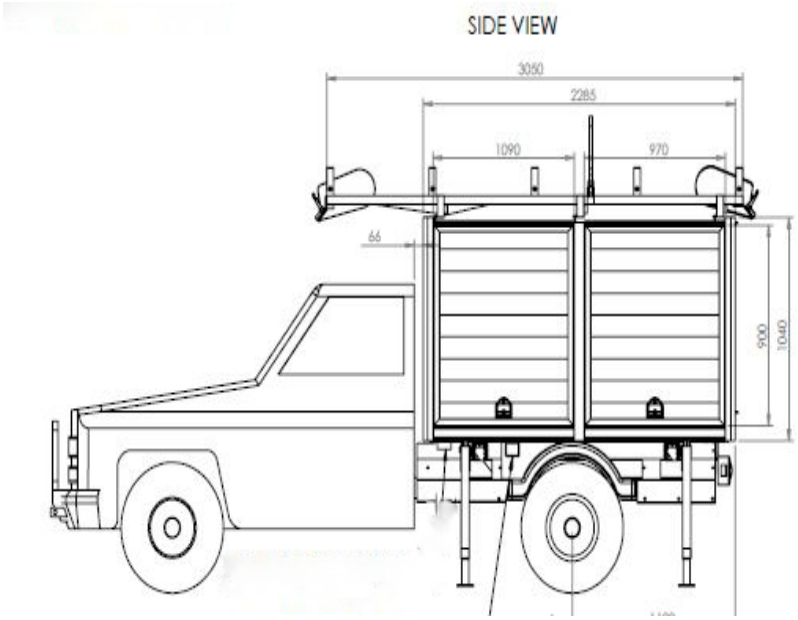

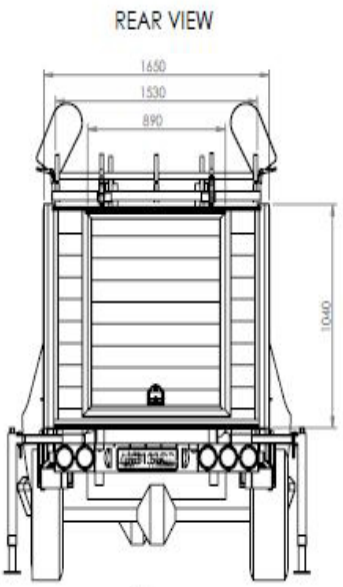



ADDENDUM H

MV2-PB: 2.5 Ton DOUBLE CAB TRUCK PANEL BODY

The swop body configurations offered must be similar in appearance for the purposes of uniformity to similar swop body vehicles in the ELECTRICITY GENERATION AND DISTRIBUTION DEPARTMENT Fleet.

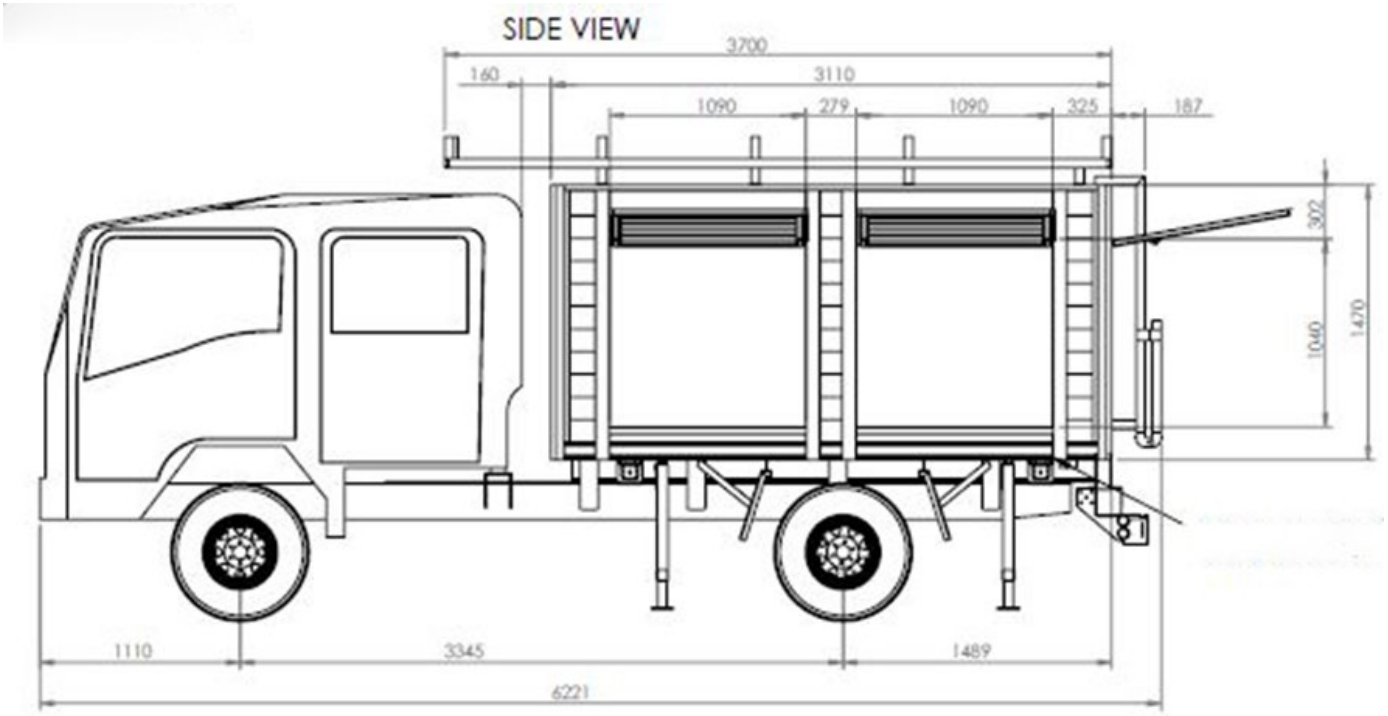



ADDENDUM J

SUBFRAME

The swop body configurations offered must be similar in appearance for the purposes of uniformity to similar swop body vehicles in the ELECTRICITY GENERATION AND DISTRIBUTION DEPARTMENT Fleet.

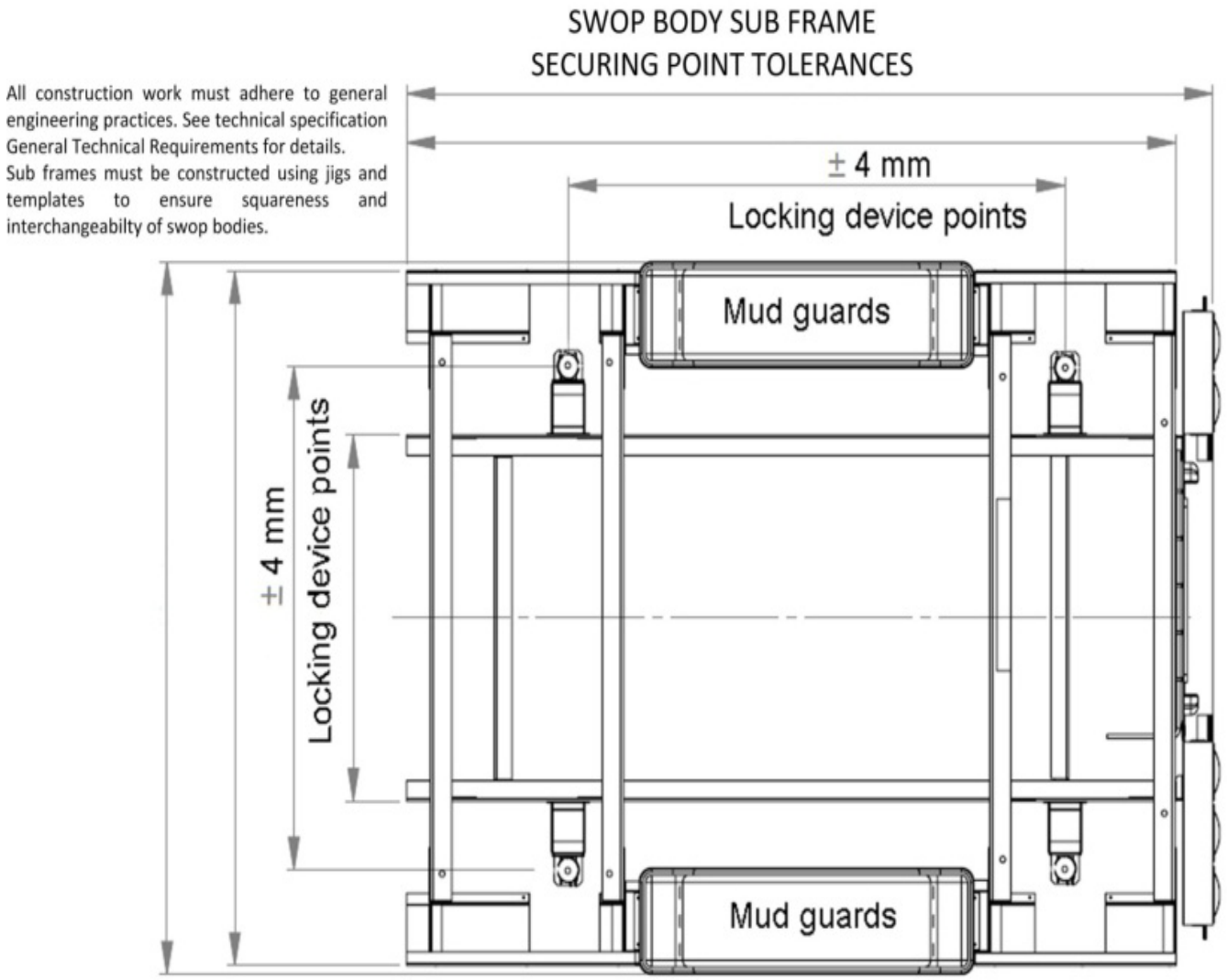

ADDENDUM L

REAR STEP ARRANGEMENT ON ALL SWOP BODY COMBINATIONS.

PROVISION MUST BE MADE FOR THE 50 MM BALL PIN TOW HITCH AND ALUMINIUM 7 PIN TRAILER PLUG IF REQUIRED.

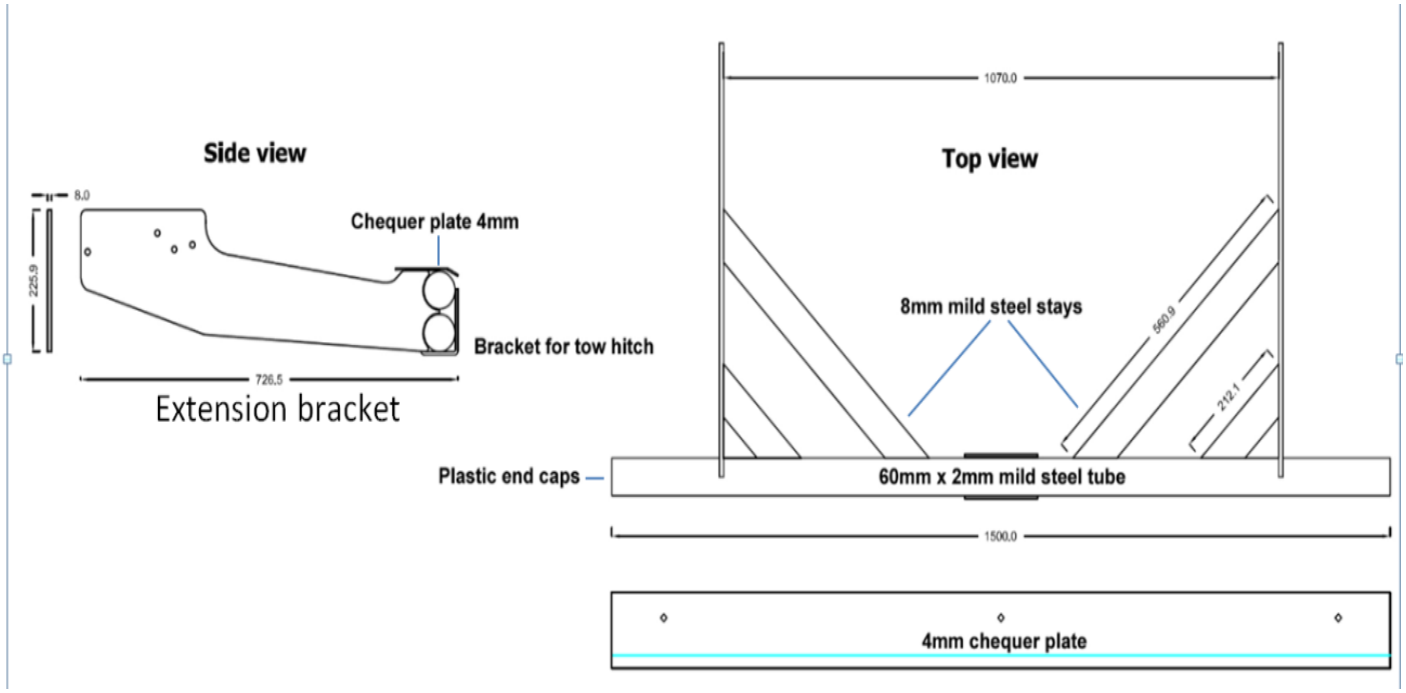

TYPICAL ARRANGEMENT OF REAR STEP

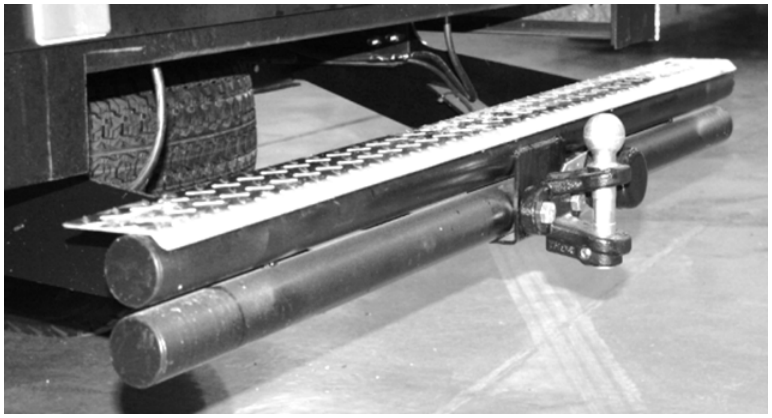

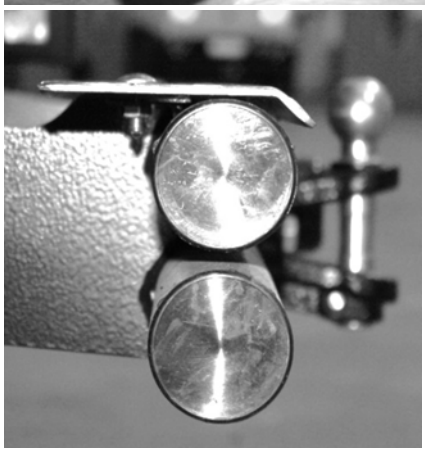

ADDENDUM M

ALUMINIUM 7 PIN TRAILER PLUG.

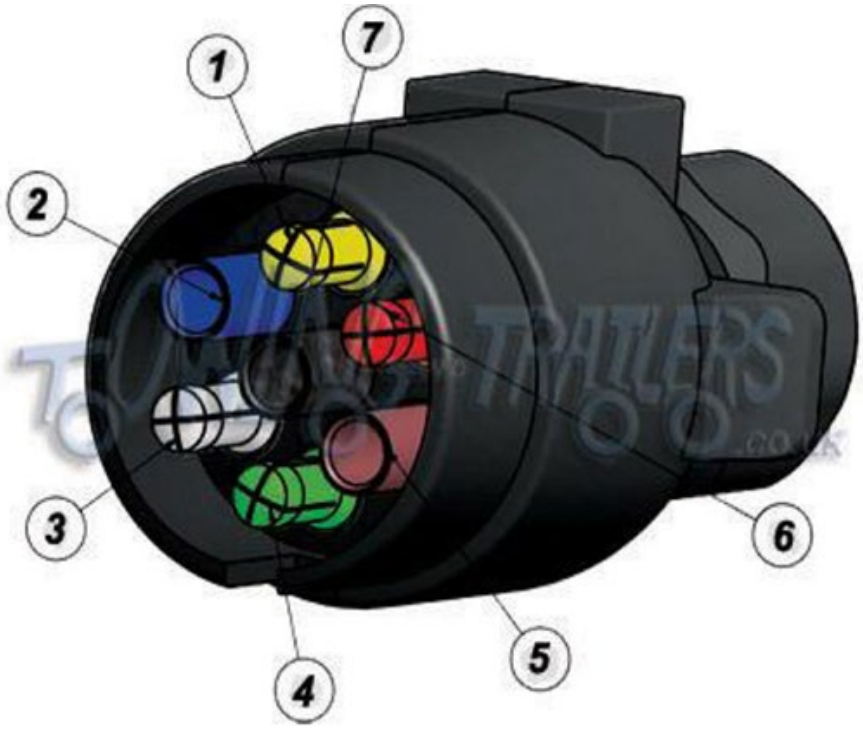

STANDARD WIRING PATTERN FOR 7-PIN PLUGS
In accordance with SABS 1327 – 1981 and ISO 1724

PIN NO. (ISO)	PIN NO. (DIN)	FUNCTION
1	L 54	Left hand direction indicator
2	52	Spare
3	31	Earth – common return
4	R54	Right hand direction indicator
5	58 R	Tail light – Right hand + number plate
6	54	Stop light
7	58 L	Tail light – Left hand

ADDENDUM N

THE BASIC LAYOUT OF THE ALUMINIUM CANOPY

Equal size doors on the sides of single and double cabs





GENERAL BURGLAR BAR DESIGN

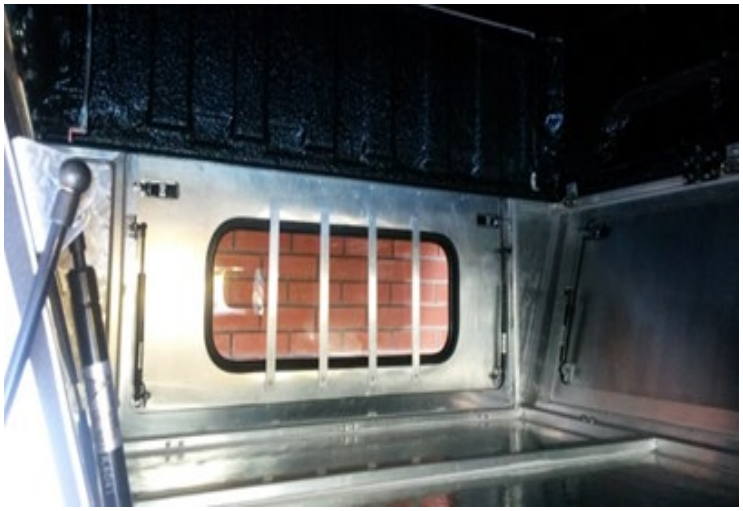

A TYPICAL EXAMPLE OF A HALF-TON LDV

The half-ton LDV is a scale down version of the single cab one ton LDV with only one door on the sides



ADDENDUM O

HEAVY DUTY ROOF RACK

Standard roof rack and rear door and window (Rear window should have burglar bars)



Heavy-duty extended roof rack single cab basic layout

Reinforced overhang 

Heavy-duty roller

Heavy-duty extended roof rack double cab basic layout



Rear ladder roller Reinforced overhang

ADDENDUM P

DOOR LOCKS, SEAL & GAS STRUTS

Waterproof door locks (Each lock should have different key)



Waterproof rubber seal between the cab and the canopy
Two gas struts per door



ADDENDUM Q

ALUMINIUM CHEQUER PLATE

2mm grade 1050 anodized aluminium chequer plate sheeting



ADDENDUM R

THE BASIC TWO DRAWER SYSTEM

The basic two drawer system with T - handle lock and adjustable tie downs to the OEM payload anchor points.





ADDENDUM S

Rear Module Decal One

Yellow and orange
360 mm H x 150 mm W to 360 mm W



ADDENDUM U

Spring Loaded Locking Device



ADDENDUM V

Outrigger leg and stabilising bars

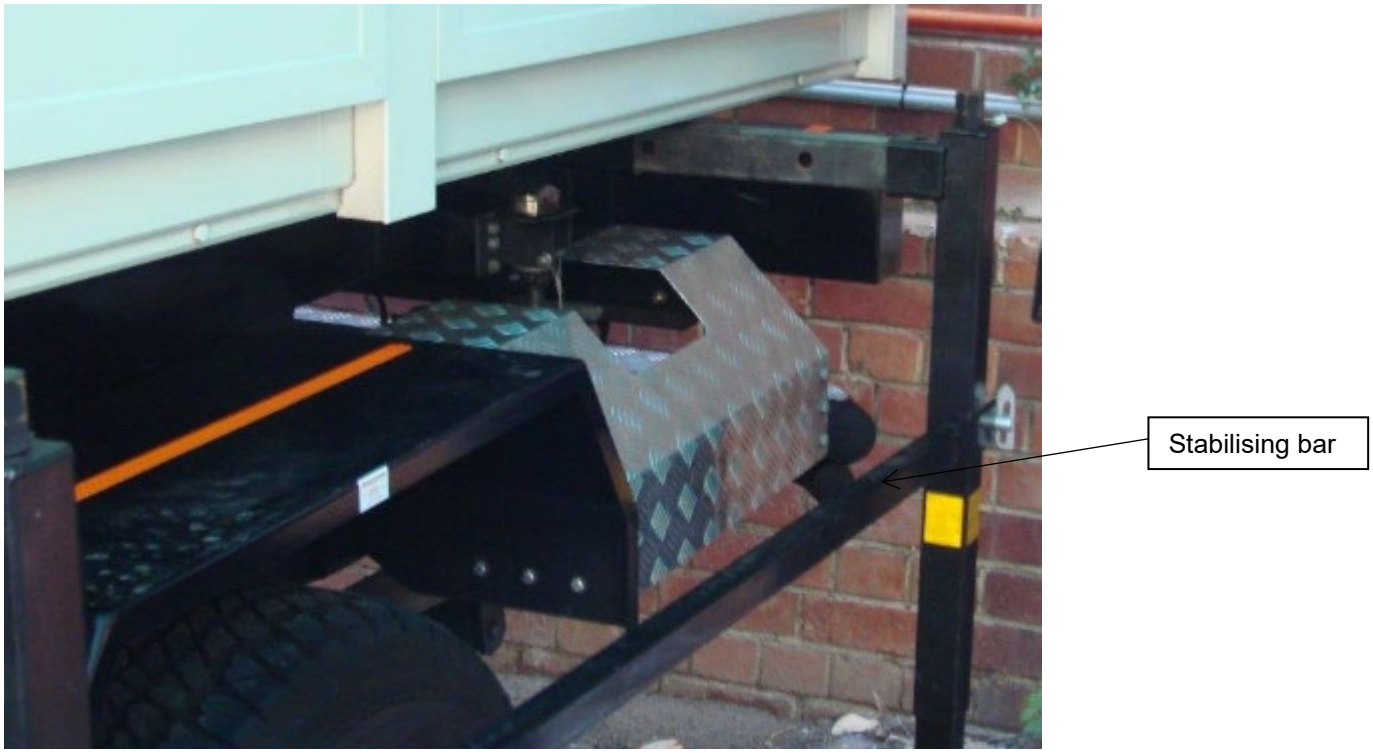

C.5 SPECIFICATIONS REPAIR AND REFURBISHMENT OF CATEGORY 1 AND CATEGORY 2 ITEMS

REPAIR AND REFURBISHMENT OF ALUMINIUM SWOP BODIES, CANOPIES AND TOOLBOXES

ITEM DESCRIPTION

1. Introduction
2. Applicable Standards
3. Primary Scope Of Work
4. Replacement Parts
5. Paint Requirements
6. Warranty on Repairs And Refurbishments

General Technical Requirements Applicable To Specification

1. INTRODUCTION

This specification calls for the Repairs, Refurbishment, Spray Painting and related services, inclusive of structural repairs and component replacements of category 1 and 2 including all sub items listed in the pricing schedule and detailed in the specifications that are installed on existing City of Cape Town Fleet Vehicles on an ad-hoc basis.

This tender makes provision for repairs to the following items: (Structural and Non-structural)

Category 1: Various aluminium storage compartments, ascociated locking mechanisms, seals, runners, handles, hinges, fasterners and linings.

Category 2: Various aluminium swop bodies, swop body subframes, canopies and accessories, associated hinges, gas struts, handles, locking mechanisms, seals, fasteners and linings.

2. APPLICABLE STANDARDS

All Service Providers must comply with all the applicable standards and legal requirements (Local Authority and National) pertaining to their enterprise and the fleet items listed in this tender. The list below is not to be construed as a complete list. The latest version or amendments thereof supersedes the standards or equivalent standards applicable to this specification: -

2.1 Road Regulations

National Road Traffic Act No. 93 of 1996

2.2 Service Provider's Premises And Workshop

The Occupational Health and Safety Act of 1983
General Administrative Regulations of 2003
Driven Machinery Regulations of 1988
General Machineries Regulations of 1988
General Safety Regulations of 1986
Facilities Regulations of 1990
Electrical installation Regulations of 2009
Electric Machinery Regulations of 2011
Hazardous Chemical Substance Regulations 1995
Environmental Regulations for Workplaces of 1987
National Environmental Management Waste Act of 2008
Environmental Conservation Act 73 of 1989
Air Quality Management By-Law, 2016
Wastewater and Industrial Effluent By-Law 2013
SANS 10400: The application of the National Building Regulations (NBR)
City of Cape Town applicable Zoning by laws

2.3 Service providers quality of workmanship and materials/parts used

SANS 1329-1:2004 : Retro-reflective warning signs.
1SANS 20104 :Reflective taping.
SANS 1700-18 4:2004 / ISO 15973:2000 - Rivets
SANS 10064:2005 - The preparation of steel surfaces for coating.
SANS 12944-4,5 :1998 - Corrosion protection.
SANS 926:1968 (2000-09-08) - Two pack zinc-rich epoxy primer
PIESA 1102:2004 - Corrosion protection of fabricated equipment
SANS 10305-5:2005 3.3.1.4. - Paint preparation (Steel sub frame)
All preparation work, welding and finishing on canopies must comply with the Aluminium Federation of South Africa (AFSA) Standards.
SABS 1327 – 1981 and ISO 1724 - Standard wiring pattern for 7-pin plugs
The decals should comply with SANS standard. (SANS 1186-1: 2011 & SANS 10233 or the latest versions thereof) Standard signs and general requirements.

3. PRIMARY SCOPE OF WORK

The Primary Scope of work may not be outsourced. The Service Provider must be able to provide the services required for the repair of the listed items to acceptable industry practices and standards.

Aluminium swop bodies, subframes, canopies, accessories and toolboxes that are covered by existing warranty conditions will be managed in terms of the agreements with the companies responsible, where applicable.

The Service Provider will be required to provide the following services as well as other services that are implied or expressly stated in this tender document which include and are not limited to:

- Quoting (at no cost to the City of Cape Town) on the City's vehicles as per scoping sheet emailed to their nominated email address.
- It must be noted that the scoping sheet is merely a guideline of the major damages noted to the items however, Service Providers are requested to submit a detailed comprehensive quotation in respect of the damages sustained to the item/s; within 48Hrs of the vehicle being delivered to their premises.
- Provide a daily updated register of all refurbishment and/or accident/incident damaged vehicles being repaired with the relevant information as well as work in progress (WIP).
- Subframe Straightening- for all structural related repair work
- Panelbeating & Repairs – for all non structural repair work which include but not limited to, beating and flatting of Item panels, repairs to rear light boxes and tow hitches (plastic/fiberglass/steel), paintless dent removal etc.
- Spray Painting – spray painting of item panels and subframe as required. The use of aluminium approved paints and application techniques where applicable. Resprayed aluminium panels are to be colour matched to the existing panels.
- Parts & Assembly – fitment/replacement of item parts and or components where applicable. Items are to be assembled and installed onto the vehicle by the service provider and the service provider is to ensure that vehicle is in road worthy condition before delivery to the City of Cape Town.
- Auto Valet & Cleaning - once repair work is completed, vehicles are to be cleaned and valeted before delivery to the City of Cape Town at no extra cost.
- Rear Glass Replacement – replacement of all canopy glass as per new item specification.
- Storage – The Service Provider is required to store a vehicle which is allocated to the Service Provider for the duration of the repair work to be undertaken on the vehicle. Storage of vehicle inside the workshop of Service Provider is required at no additional cost.
- Inform the City's official timeously of the delays experienced in respect of the repairs being carried out i.e. backorder on parts, poor supplier performance standards and provide the relevant proof from the suppliers thereof.
- Comply with all reasonable requests from the SCM Official and the external assessor / his representative in respect of City's Vehicles.
- Upon being issued with an order, the relevant vehicle will be delivered to the Service Provider, whom within 24Hrs of delivery of the Fleet asset to the the Service Providers premise's, strip to ascertain hidden, unseen damage for an assessment.
- Adhere to the completion dates for repairs.

4. Replacement Parts

Replacement parts includes but are not limited to:

4.1. **Category 1: Various aluminium storage compartments**

- 4.1.1. Locking mechanisms and keys
- 4.1.2. Draw runners of various lengths and weight ratings
- 4.1.3. Lengths of aluminium structural box section
- 4.1.4. Handles
- 4.1.5. Seals
- 4.1.6. Hinges
- 4.1.7. Mounting brackets

4.1.8. Sheet metal components – Stainless steel, aluminium, mild steel of various thicknesses

4.2. **Category 2: Various aluminium swop bodies, swop body subframes, canopies and accessories**

4.2.1. Lenths of aluminium interlocking box section
4.2.2. Lengths of aluminium structural box section
4.2.3. Gas struts
4.2.4. Hinges
4.2.5. Locking mecanisims and keys
4.2.6. Handles
4.2.7. Seals
4.2.8. Decals
4.2.9. Rear windows
4.2.10. Roof-rack rolers
4.2.11. Roof-rack ratchet staps
4.2.12. 7-pin tow hitch plug and wiring harness
4.2.13. Rear step configuration
4.2.14. Sheet metal components – Stainless steel, aluminium, mild steel of various thicknesses etc.

5. Paint requirements

The paint requirement for repairs and refurbishments shall comply to the same standards as set out and defined in Category 2 section 12 of the specifications.

6. Warranty on Repairs and Refurbishments

6.1. The warranty for repaired,replaced and/or refurbished items shall remain valid for twelve (12) months from date of Delivery of the Goods and/or Services.
6.2. A minimum of twelve (12) months' warranty on workmanship from sign off of repair works. Fair wear and tear, misuse and accidental damage is excluded when proven to be so.
6.3. Any replacement parts used in the repair of any item in the scope of this tender shall have a warranty of twelve months from date of invoice. Fair wear and tear, misuse and accidental damage is excluded when proven to be so.
6.4. All paint (including primer, paint coat and clear coat) to carry a minimum of three (3) year warranty.

ADDITIONAL INFORMATION FOR IN-CONTRACT DEVELOPMENT GUIDELINES CONTRACTUAL OBLIGATIONS

The following addendums forms part of the contractual obligations in-contract:

ADDENDUM	TITLE
1	GEOGRAPHICAL BOUNDARY OF THE CITY OF CAPE TOWN

ADDENDUM 1 - GEOGRAPHICAL BOUNDARY OF THE CITY OF CAPE TOWN

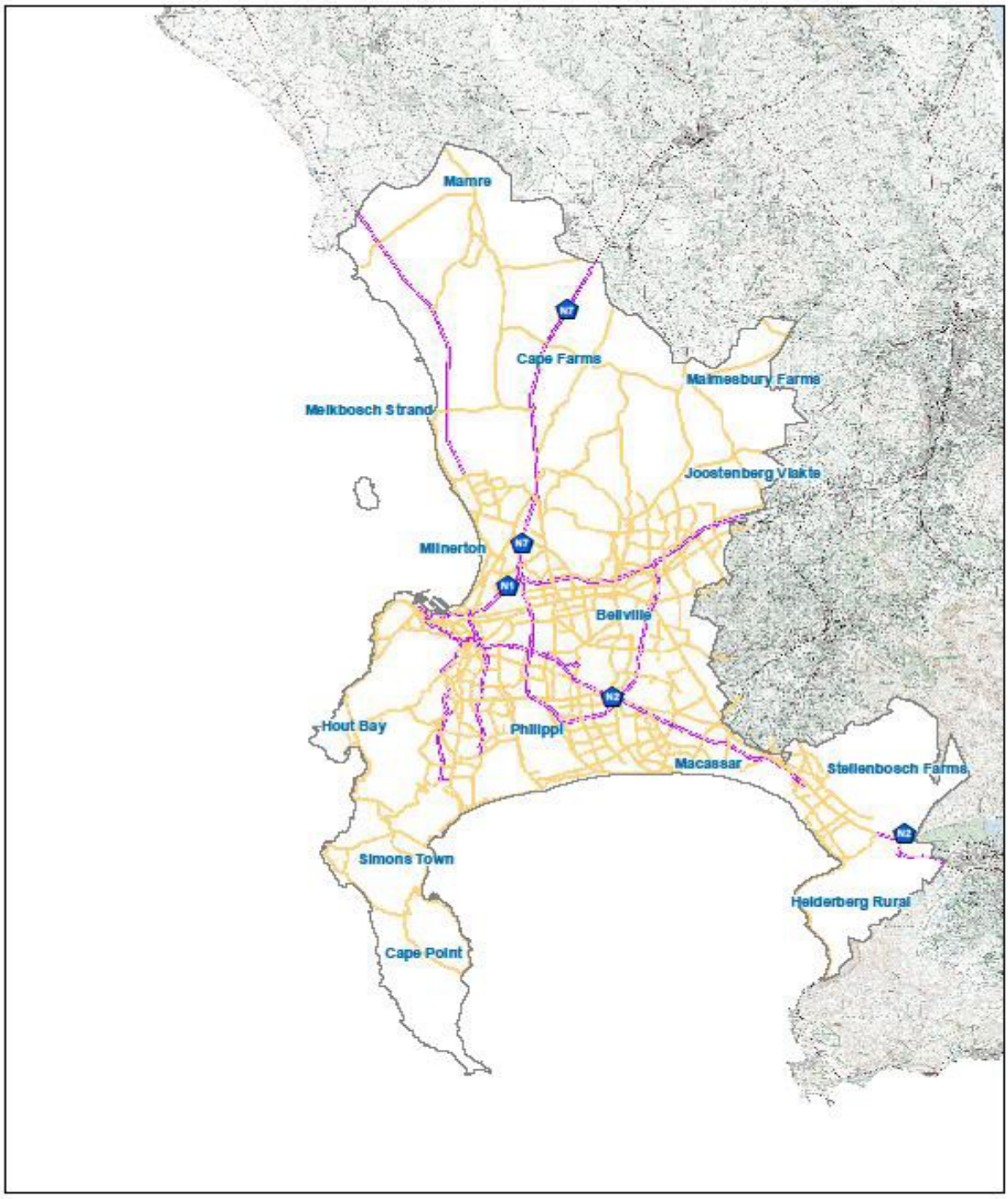

	THIS MAP WAS GENERATED BY THE CityMap Viewer Information & Knowledge Management Department Author: Date: 07 August 2024	Geographical Boundaries Legend	1:512 000	

C.5 GENERAL TECHNICAL REQUIREMENTS APPLICABLE

1. GENERAL REQUIREMENTS

1.1 The Tenderer shall be accredited in terms of Section 38 of the Road Traffic Act (Latest) as a body builder and shall provide a valid up to date copy of such accreditation.

1.2 The complete installation as detailed in the Scope of Specification shall comply with all the requirements of this specification as well as conforming to all Road Traffic Act (Latest) ordinances and associated SANS compulsory specifications as well as South African standard engineering codes of practice for this type of construction.

1.3 The equipment, materials and apparatus used in the assembly shall be new and of best commercial quality with a high reliability and shall be selected for ease of maintenance and availability in the geographical area of the City of Cape Town.

1.4 It is in the interests of the contractor to notify the CITY OF CAPE TOWN'S Fleet Management Department when the construction / assembly reach various stages of completion so that the designated Technical Representative may inspect the vehicle and point out deficiencies. Any costs incurred in correcting deficiencies shall be for the Contractors account.

1.5 The contractor shall apply best engineering practices and shall apply the relevant SANS codes of practice in ensuring the highest quality standard of workmanship.

1.6 All material and equipment shall comply in respect of quality, manufacture, tests and performance of at least one of the following standards.

ISO (International Standards Organisation)
IEC (International Electro technical Commission
EN (European Standards)
BS (British Standards)
DIN (Deutsche Industrie Normen)

1.7 All material and equipment supplied shall be suitable for operating conditions as found within the boundaries of the CITY OF CAPE TOWN.

1.8 Individual components such as valves, batteries, terminal blocks, and electrical control equipment etc. when used in the supplied swop body shall be new, of the same make, type or series for each item. Standardisation and mutual interchangeability of components is essential.

2. STANDARD OF WORKMANSHIP

2.1 All work required for completion of this tender shall be according to the latest professional South African engineering standards.

2.2 Material or workmanship which is not to the satisfaction of the CITY OF CAPE TOWN'S, ELECTRICITY GENERATION AND DISTRIBUTION DEPARTMENT, and Fleet Management Technical Representative shall be rectified at the cost of the Contractor.

2.3 The swop body fitted with an upper sub frame described in the technical specification, shall be mounted onto an approved lightweight sub frame which will be fixed to the vehicle chassis. The design, manufacturing standards and consequent fitment must be approved by the vehicle manufacturer.

3. QUALITY CONTROL INSPECTIONS

The City of Cape Town, ELECTRICITY GENERATION AND DISTRIBUTION DEPARTMENT Fleet Management Department may at its discretion, conduct quality control inspections during the production and assembly process. The inspection intervals will be negotiated on award of the tender. If the abovementioned processes take place outside the boundaries of the Western Cape, the cost of three inspections undertaken by the designated Technical Inspector must be incorporated in the tender price.

4. STRUCTURAL STEELWORK

All structural members (steel and aluminium) shall be capable of sustaining in a structurally stable manner, the total load and forces acting on such structural members.

Each part of the structural installation shall be correctly designed, constructed and erected and shall be according to appropriate SANS specifications covering structural steelwork.

4.1 HOLES

Holes, slots shall be machined to a template. Burrs and risers shall be removed before assembly.

4.2 BOLTS / FASTENERS

SANS 1700-7-7:2003 / ISO 7411:1984
Hexagon bolts for high-strength structural bolting

SANS 1700-7-8:2003 / ISO 7412:1984
Hexagon bolts for high-strength structural bolting (Short threads)

SANS 1700-14-8:2003 / ISO 4775:1984
Hexagon nuts for high-strength structural bolting

SANS 1700-16-9:2004 / ISO 7416:1984
Plain washers for high-strength structural bolting

Where applicable, Nylon lock nuts must be used.

4.3 WELDING

All welding must be done under supervision of a qualified artisan / foreman and shall confirm to the following standards.

SANS 455:2004:	Manual electrode welding of mild steel.
SANS 10044-2:2004:	Code of practice for welding.
SANS 10167:2004:	Quality evaluation of fusion welding joints.

Welding jigs / templates should be utilized to ensure uniformity of construction and to ensure that sub frames are standardised between each type of swop body allowing full interchangeability of swop bodies.

The surfaces to be welded shall be cleaned and free from rust, scale or other foreign materials. Full attention is to be given to correct edge preparation suitable for welding applications used.

Welds shall be full strength without flaws, grooves or pits. Crater effects shall be avoided.

All welds shall have adequate root fusion and shall be free from cracks, porosity or other irregularities and

any under cutting shall be made good by the contractor.
Weld fillet sizes must be appropriate to the size of the structural steel welded and be done without requiring excessive amounts of grinding or dressing.

Intermittent welding joints and butt welding joints with insufficient penetration shall not be used. All welding joints shall be thoroughly cleaned after welding.

5. TRADE NAMES OR PROPRIETARY PRODUCTS

Tenderers/Suppliers must note that wherever this document refers to any particular trade mark, name, patent, design, type, specific origin or producer, such reference shall be deemed to be accompanied by the words “or equivalent”.

6. EMPLOYMENT OF SECURITY PERSONNEL

All security staff employed by the Supplier on behalf of the CCT or at any CCT property must be registered with Private Security Industry Regulatory Authority (PSiRA). Proof of such registration must be made available to the CCT or its agent, upon request.

7. FORMS FOR CONTRACT ADMINISTRATION

The Supplier shall complete, sign and submit with each invoice, the following:

a) Monthly Project Labour Report (described below)

The Monthly Project Labour Report must include details of all labour (including that of sub-contractors) that are South African citizens earning less than **[R 500]** per day, as adjusted from time to time (excluding any benefits), who are employed on a temporary or contract basis on this contract in the month in question.

In addition to the Monthly Project Labour Report the Supplier shall simultaneously furnish the CCT’s Agent with copies of the employment contracts entered into with such labour, together with certified copies of identification documents, proof of attendance in the form of attendance register or timesheets as well as evidence of payments to such labour in the form of copies of payslips or payroll runs. If the worker is paid in cash or by cheque, this information must be recorded on the envelope and the worker must acknowledge receipt of payment by signing for it and proof of such acknowledgement shall be furnished to the CCT’s Agent.

C.6 SPECIAL CONDITIONS OF CONTRACT

The following Special Conditions of Contract, referring to the National Treasury – Conditions of Contract (revised July 2010), are applicable to this agreement.

1. Definitions

Insert new clause 1.1A with the following:

1.1A "Commencement Date" means the date the Supplier confirms receipt from the Purchaser of 1 (one) complete, signed copy of the Contract, the *Schedule of Deviations* (if any).

1.1B "Conditions of Contract" means the general conditions of contract and special conditions of contract including all other contract data incorporated by reference.

Delete Clause 1.15 and substitute with the following

1.15 The word 'Goods' is to be replaced everywhere it occurs in the GCC with the phrase 'Goods and / or Services' which means all of the equipment, machinery, materials, services, products, consumables, etc. that the Supplier is required to deliver to the Purchaser under the agreement. This definition shall also be applicable, as the context requires, anywhere where the words "supplies" and "services" occurs in the GCC.

Delete Clause 1.19 and substitute with the following

1.19 The word 'Order' is to be replaced everywhere it occurs in the GCC with the words 'Purchase Order' which means the official purchase order authorised and released on the Purchaser's SAP System.

Delete Clause 1.21 and substitute with the following:

1.21 'Purchaser' means the City of Cape Town. The address of the Purchaser is 12 Hertzog Boulevard, Cape Town, 8001 (chosen domicilium citandi et executandi).

Add the following after Clause 1.25:

1.26 'Supplier' means the provider of Goods and / or Services with whom the Contract is concluded also referred to as "contractor" in the GCC.

1.27 "Intellectual Property" means any and all intellectual property rights of any nature anywhere in the world whether registered, registerable or otherwise, including patents, trademarks, registered designs and domain names, applications for any of the foregoing, trade or business names, copyright and rights in the nature of copyright, design rights, rights in databases, know-how, trade secrets and any other intellectual property rights which subsist in computer software, computer programs, websites, documents, information, techniques, business methods, drawings, logos, instruction manuals, lists and procedures and particulars of customers, marketing methods and procedures and advertising literature, including the "look and feel" of any websites

1.28 "Working Day" means Monday to Friday excluding weekends and Public Holidays (in the Republic of Sotuh Africa).

3. General Obligations

Delete Clause 3.2 in its entirety and replace with the following clauses.

3.2 The Parties will be liable to each other arising out of or in connection with any breach of the obligations detailed or implied in this contract, subject to clause 28.

3.3 If the Supplier is a joint venture, all parties in a joint venture or consortium shall be jointly and severally liable to the Purchaser in terms of the Contract and shall carry individually the minimum levels of insurance stated in the Contract, if any.

3.4 The Parties shall comply with all laws, regulations and bylaws of local or other authorities having jurisdiction regarding the Delivery of the Goods and/or Services and give all notices and pay all charges required by such authorities.

3.4.1 The Parties agree that this Contract shall also be subject to the CCT's Supply Chain Management Policy ("SCM Policy") that was applicable on the date the bid was advertised as amended from time to time. If the Purchaser adopts a new SCM Policy which contemplates that any clause therein would apply to the Contract emanating from this tender, such clause shall also be applicable to the Contract. Please refer to this document contained on the CCT's website.

3.4.2 Abuse of the supply chain management system is not permitted and may result in termination of the Contract, restriction of the Supplier, and/or the exercise by the CCT of any other remedies available to it as described in the SCM Policy or in law.

3.5 The Supplier shall:

3.5.1 Arrange for the documents listed below to be provided to the Purchaser prior to the issuing of the Purchase Order by the Purchaser and no later than the periods as set out in the Contract:

a) Proof of Insurance (Refer to Clause 11) or Insurance Broker's Warrantee,
b) Letter of good standing from the Compensation Commissioner, or a licensed compensation insurer (Refer to Clause 11),
c) Initial delivery programme, and
d) Other requirements as detailed in the Contract.

3.5.2 Only when notified of the acceptance of the bid on the Date of Commencement of Contract, the Supplier shall commence with and carry out the Delivery of the Goods and/or Services in accordance with the Contract, to the satisfaction, of the Purchaser.

3.5.3 Provide all of the necessary materials, labour, plant and equipment required for the delivery of the Goods and/or Servces including any temporary services that may be required.

3.5.4 Insure his workmen and employees against death or injury arising out of the delivery of the Goods.

3.5.5 Be continuously represented during the Delivery of the Goods and/or Services by a competent representative duly authorised to execute instructions.

3.5.6 In the event of a loss resulting in a claim against the insurance policies stated in clause 11, pay the first amount (excess) as required by the insurance policy.

3.5.7 Comply with all written instructions from the Purchaser subject to clause 18.

3.5.8 Complete and Deliver the goods within the period stated in clause 10, or any extensions thereof in terms of clause 21.

3.5.9 Make good at his own expense, all incomplete and defective Goods during the warranty period.

3.5.10 Pay to the Purchaser any penalty for delay as due on demand by the Purchaser. The Supplier hereby consents to such amounts being deducted from any payment due to the Supplier.

3.5.11 Comply with the provisions of the OHAS Act & all relevant regulations.

3.5.12 Comply with all laws relating to wages and conditions generally governing the employment of labour in the Cape Town area and any applicable Bargaining Council agreements.

3.5.13 Deliver the Goods in accordance with the Contract and with all reasonable care, diligence and skill in accordance with generally accepted professional techniques and standards.

3.6 The Purchaser shall:

3.6.1 Issue Purchaser Orders for the Goods and/or Services required under this Contract. No liability for payment will ensue for arising out of the Delivery of the Goods and/or Services, unless a Purchase Order

has been issued to the Supplier.

3.6.2 Make payment to the Supplier for the Goods and/or Services as set out herein.

3.6.3 Take possession of the Goods and /or Services upon Delivery by the Supplier.

3.6.4 Regularly inspect the Goods to establish that it is being delivered in compliance with the Contract.

3.6.5 Give any instructions and/or explanations and/or variations to the Supplier including any relevant advice to assist the Supplier to understand the Contract.

3.6.6 Grant or refuse any extension of time requested by the Supplier of the period stated in clause 10.

3.6.7 Inspect the Goods and/or Services to determine if, in the opinion of the Purchaser, it has been delivered in compliance with the Contract, alternatively in such a state that it can be properly used for the purpose for which it was intended.

3.6.8 Brief the Supplier and issue all documents, information, etc. in accordance with the contract.

5. Use of contract documents and information; inspection, copyright, confidentiality, etc.

Add the following after clause 5.4:

5.5 Copyright of all documents prepared by the Supplier in accordance with the relevant provisions of the Copyright Act (Act 98 of 1978) relating to the Contract shall be vested in the Purchaser. Where copyright is vested in the Supplier, the Purchaser shall be entitled to use the documents or copy them only for the purposes for which they are intended in regard to the agreement and need not obtain the Supplier's permission to copy it for such use. Where copyright is vested in the Purchaser, the Supplier shall not be liable in any way for the use of any of the information other than as originally intended in terms of the agreement and the Purchaser hereby indemnifies the Supplier against any claim which may be made against it by any person / entity, arising from the use of such documentation for other purposes.

The ownership of data and factual information collected by the Supplier and paid for by the Purchaser shall, after payment, vest with the Purchaser.

5.6 Publicity and publication
The Supplier shall not release public or media statements or publish material related to the services or agreement within two (2) years of Delivery of the Goods, without the written approval of the Purchaser, which approval shall not be unreasonably withheld.

5.7 Confidentiality
Both Parties shall keep all information obtained by them in the context of the agreement, confidential and shall not divulge it without the written approval of the other Party.

5.8 Intellectual Property

5.8.1 The Supplier acknowledges that it shall not acquire any right, title or interest in or to the Intellectual Property of the Purchaser.

5.8.2 The Supplier hereby assigns to the Purchaser, all Intellectual Property created, developed or otherwise brought into existence by it for the purposes of the agreement, unless the Parties expressly agree otherwise in writing.

5.8.3 The Supplier shall, and warrants that it shall:

5.8.3.1 Not be entitled to use the Purchaser's Intellectual Property for any purpose other than as contemplated in the agreement;

5.8.3.2 not modify, add to, change or alter the Purchaser's Intellectual Property, or any information or data related thereto, nor may the Supplier produce any product as a result of, including and/or arising from any such information, data and Intellectual Property, and in the event that it does produce any such product, the product shall be, and be deemed in law to be, owned by the Purchaser;

5.8.3.3 Not apply for or obtain registration of any domain name, trademark or design which is similar to any Intellectual Property of the Purchser;

5.8.3.4 Comply with all reasonable directions or instructions given to it by the Purchaser in relation to the form and manner of use of the CCT Intellectual Property, including without limitation, any brand guidelines which the Purchaser may provide to the Supplier from time to time;

5.8.3.5 Ensure that its employees, directors, members and contractors comply strictly with the provisions of this Clasue 5.5.8.4 above unless the Purchaser expressly agrees to the contrary, in writing and only after obtaining due internal authority for such agreement.

5.8.4 The Supplier represents and warrants to the Purchaser that, in providing Goods and/or Services for the duration of the agreement it will not infringe or make unauthorised use of the Intellectual Property rights of any third party and hereby indemnifies the Purchaser from any claims, liability, loss, damages, costs, and expenses arising from the infringement or unauthorised use by the Supplier of any third party's Intellectual Property rights.

5.8.5 Upon expiry of the contract period and in the event that the Contract is terminated, ended or is declared void, any and all of the Purchaser's Intellectual Property, and any and all information and data related thereto, shall be immediately handed over to the Purchaser by the Supplier and no copies thereof shall be retained by the Supplier unless the Purchaser expressly and in writing, after obtaining due internal authority, agrees otherwise.

Add the following after clause 5.8:

5.9 **Protection of Personal Information Act of 2013**

By submitting a tender to the Purchaser, (and by concluding any ensuing related agreement with the City of Cape Town, if applicable), the Tenderer thereby acknowledges and unconditionally agrees:

5.9.1 that the tenderer has been informed of the purpose of the collection and processing of its personal information as defined in the Protection of Personal Information Act of 2013 ("POPIA"), which, for the avoidance of doubt is for, and in relation to, the tender process and the negotiation, conclusion, performance and enforcement of the ensuing agreement, if applicable, as well as for the City of Cape Town's reporting purposes;

5.9.2 to the collection and processing of the tenderer's personal information by the City of Cape Town and agrees to make available to the City of Cape Town, all information reasonably required by the City of Cape Town for the above purposes;

5.9.3 that the personal information the City of Cape Town collects from the tenderer or about the tenderer may be further processed for other activities and/or purposes which are lawful, reasonable, relevant and not excessive in relation to the purposes set out above, for which it was originally collected;

5.9.4 that, the tenderer indemnifies the City of Cape Town and its officials, employees, and directors and undertakes to keep the City of Cape Town and its officials, employees, and directors indemnified in respect of any claim, loss, demands, liability, costs and expenses of whatsoever nature which may be made against the City of Cape Town (including the costs incurred in defending or contesting any such claim) in relation to the tenderer or the tenderer's employees', representatives' and/or sub-Suppliers' non-compliance with POPIA and/or the City of Cape Town's failure to obtain the tenderer's consent or to notify the tenderer of the reason for the processing of the tenderer's personal information;

5.9.5 to the disclosure of the tenderer's personal information by the City of Cape Town to any third party, where the City of Cape Town has a legal or contractual obligation to disclose such personal information to the third party (or a legitimate interest exits therein);

5.9.6 that, under POPIA, the tenderer may request to access, confirm, request the correction, destruction, or deletion of, or request a description of, personal information held by the City of Cape Town in relation to you, subject to applicable law; and

that under POPIA, subject to applicable law, the tenderer also has the right to be notified of a personal information breach and the right to object to, or restrict, the City of Cape Town's processing of its personal information.

5.10 **PERFORMANCE MONITORING**

5.10.1 As required by section 116(2)(b) of the Local Government: Municipal Financial Management Act 56 of 2003, the CCT shall monitor the performance of the Supplier on at least a monthly basis, and the Supplier agrees to provide the CCT with its full cooperation in this regard.

7. Performance Security

Not Applicable. Tenderers must disregard the **Pro Forma Performance Security/ Guarantee** and are not required to furnish same.

8. Inspections, tests and analyses

Delete Clause 8.2 and substitute with the following:

8.2 If it is a bid condition that Goods and/or Services to be produced or services to be rendered should at any stage during production or execution or on completion be subject to inspection, the premises of the bidder or Supplier shall be open, at all reasonable hours, for inspection by a representative of the Purchaser or an organisation acting on behalf of the Purchaser.

10. Delivery and documents

Delete clauses 10.1 and 10.2 and replace with the following:

10.1 Delivery of the goods shall be made by the Supplier in accordance with the terms specified in the contract. The time for Delivery of the goods shall be the date as stated on the Purchase Order. In the case of agreements for Delivery of goods in terms of framework or panel agreements, Purchase Orders for the supply and delivery of goods may be raised up until the expiry of a framework or panel agreement, provided that the goods can be delivered within 30 (thirty) days of expiry of the framework or panel agreement. In this context, the "goods" does not include services and carries its ordinary meaning. All Purchase Orders other than for the supply and Delivery of goods (i.e. supply of services, professional services or constructions works), must be completed prior to the expiry of the contract period.

10.2 The Purchaser shall determine, in its sole discretion, whether the Goods and/or Services have been delivered in compliance with the Contract, alternatively in such a state that it can be properly used for the purpose for which it was intended. When the Purchaser determines that the Goods and/or Services have been satisfactorily delivered, the Purchaser must issue an appropriate certification, or written approval, to that effect. Invoicing may only occur, and must be dated, on or after the date of such written acceptance of the Goods.

11. Insurance

Add the following after clause 11.1:

11.2 Without limiting the obligations of the Supplier in terms of this Contract, the Supplier shall effect and maintain the following additional insurances:

11.2.1 Public liability insurances, in the name of the Supplier, covering the Supplier and the Purchaser against liability for the death of or injury to any person, or loss of or damage to any property, arising out of or in the course of this Contract, in an amount not less than **[R20 million]** for any single claim;

11.2.2 Motor Vehicle Liability Insurance, in respect of all vehicles owned and / or leased by the Supplier, comprising (as a minimum) "Balance of Third Party" Risks including Passenger Liability Indemnity;

11.2.3 Registration / insurance in terms of the Compensation for Occupational Injuries and Disease Act, Act 130 of 1993. This can either take the form of a certified copy of a valid Letter of Good Standing issued by the Compensation Commissioner, or proof of insurance with a licenced compensation insurer, from either the Supplier's broker or the insurance company itself (see the Pro Forma Insurance Broker's Warranty).

[11.2.4 In the case of Contracts for delivery of professional services, Professional indemnity insurance providing

cover in an amount of not less than [**R5 million]** in respect of each and every claim during the contract period.] (Not Applicable)

11.2.5 In the event of under insurance or the insurer's repudiation of any claim for whatever reason, the Purchaser will retain its right of recourse against the Supplier.

11.3 The Supplier shall be obliged to furnish the Purchaser with proof of such insurance as the Purchaser may require from time to time for the duration of this Contract. Evidence that the insurances have been effected in terms of this clause, shall be either in the form of an insurance broker's warranty worded precisely as per the pro forma version contained in the Pro forma Insurance Broker's Warranty or copies of the insurance policies.

15. Warranty

Add to Clause 15.2:

15.2 This warranty for this contract shall remain valid as per specification clauses located under Category 1 Section 12, Category 2 Section 16 and Repair and refurbishment Category section 6 after the goods have been delivered.

15.2.1. Category 1

a. The storage units must be covered under full and valid factory warranty and the fitted storage units must be fully guaranteed by the service provider for at least 2 years against any defects or faulty workmanship under normal conditions (abuse, fair wear and tear excluded).
b. All copies of signed factory warranty documents as well the guarantee document must be supplied on delivery and be in force from the date of delivery.
c. Service providers are expected to accept full responsibility for the complete fitted storage unit and must beable to service any warranty claims and guarantees offered by their subcontractors.

15.2.2. Category 2

a) The Swop Body types, Aluminium Canopies and accessories supplied as new must be fully guaranteed for at least 5 years; the structural integrity must be guaranteed for at least 5 years and guaranteed against body rust or paint defects for at least 5 years (abuse, fair wear and tear excluded).
b) All warrantee repair work rendered by the service proverder to any of the line items listed is to carry a 12 month warranty. (abuse, fair wear and tear excluded).
c) All paint (including primer, paint coat and clear coat) to carry a minimum of three (3) year warranty.
d) Service providers are expected to accept full responsibility for the complete swop body and must under-write any guarantees offered by their sub-contractors.

15.2.3. Repairs and Refurbishment of Category 1 and 2 items

a) The warranty for repaired,replaced and/or refurbished items shall remain valid for twelve (12) months from date of Delivery of the Goods and/or Services.
b) A minimum of twelve (12) months' warranty on workmanship from sign off of repair works. Fair wear and tear, misuse and accidental damage is excluded when proven to be so.
c) Any replacement parts used in the repair of any item in the scope of this tender shall have a warranty of twelve (12) months from date of invoice. Fair wear and tear, misuse and accidental damage is excluded when proven to be so.
d) All paint (including primer, paint coat and clear coat) to carry a minimum of three (3) year warranty.

16. Payment

Delete Clause 16.1 in its entirety and replace with the following:

16.1 Payment of invoices will be made:

16.1.1 Within 30 (thirty) days of receiving the relevant invoice or statement from the Supplier, unless otherwise prescribed for certain categories of expenditure or specific contractual requirements in accordance with any other applicable policies of the Purchaser.

16.1.2 Notwithstanding anything contained above, the Purchaser shall not be liable for payment of any invoice that pre-dates the date of delivery of any Goods and/or Services.

Delete Clause 16.2 in its entirety and replace with the following:

16.2 The Supplier shall furnish the purchaser's Accounts Payable Department with an original tax invoice, clearly showing the amount due in respect of each and every claim for payment.

Add the following after clause 16.4

16.5 Notwithstanding any amount stated on the Purchase Order, the Supplier shall only be entitled to payment for Goods and/or Services actually delivered in terms of the Specification and Drawings, or any variations thereof made in accordance with clause 18. Any contingency sum included shall be for the sole use, and at the discretion, of the Purchaser.

17. Prices

Add the following after clause 17.1

17.2 If as a result of an award of a contract beyond the original tender validity period, the contract execution will be completed beyond a period of twelve (12) months from the expiry of the original tender validity period, then the contract may be subject to contract price adjustment for that period beyond such twelve (12) months. An appropriate contract price adjustment formula will be determined by the Purchaser delegated authority if such was not included in the bid documents.

17.3 If as a result of any extension of time granted, the contract execution will be completed beyond a period of twelve (12) months from the expiry of the original tender validity period, then contract price adjustment may apply to that period beyond such twelve (12) months. An appropriate contract price adjustment formula will be determined by the Director: Supply Chain Management if such was not included in the bid documents.

17.4 The prices for the goods and/or Services delivered and services performed shall be subject to contract price adjustment in terms of Schedule F.1 Contract Price Adjustment and/or Rate of Exchange Variations and the following conditions will be applicable:

Refer to Schedule F.1 Contract Price Adjustment

18. Contract Amendments

Delete the heading of clause 18 and replace with the following:

18. Contract Amendments and Variations

Add the following to clause 18.1:

Variations means changes to the Goods and/or Services, extension of the contract period or increases in the value of the Contract as a result of written instructions issued by the Purchaser to the Supplier. Such changes are subject to prior approval by the Purchaser's delegated authority. Should the Supplier deliver any Goods not described in a written instruction from the Purchaser, the Purchaser's liability for payment shall no arise until such time as the change has been duly approved and such approval communicated to the Purchaser.

20. Subcontracts

Add the following after clause 20.1:

20.2 The Supplier shall be liable for the acts, defaults and negligence of any subcontractor, his agents or employees as fully as if they were the acts, defaults or negligence of the Supplier.

20.3 Any appointment of a subcontractor shall not amount to a contract between the Purchaser and the subcontractor, or a responsibility or liability on the part of the Purchaser to the subcontractor and shall not relive the Supplier from any liability or obligation under the Contract.

21. Delays in the supplier's performance

Delete Clause 21.2 in its entirety and replace with the following:

21.2 If at any time during the performance of obligations contained in the Contract the Supplier or its subcontractors should encounter conditions beyond their reasonable control which impede the timely delivery of the Goods and/or Services, the Supplier shall notify the Purchaser in writing, within 7 (seven) days of first having become aware of these conditions, of the facts of the delay, its cause(s) and its probable duration. As soon as practicable after receipt of the Supplier's notice, the Purchaser shall evaluate the situation, and may at his discretion extend the time for Delivery.

Where additional time is granted, the Purchaser shall also determine whether or not the Supplier is entitled to payment for additional costs in respect thereof. The principle to be applied in this regard is that where the Purchaser or any of its agents are responsible for the delay, reasonable costs shall be paid. In respect of delays that were beyond the reasonable control of both the Supplier and the Purchaser, additional time only (no costs) will be granted.

The Purchaser shall notify the Supplier in writing of his decision(s) in the above regard.

21.3 No provision in this Contract shall be deemed to prohibit the obtaining of Goods and/or Services from a national department, provincial department, or a local authority.

22. Penalties

Delete clause 22.1 and replace with the following:

22.1 Subject to GCC Clause 25, if the Supplier fails to deliver any or all of the Goods and/or Services within the period(s) specified in the Contract, the Purchaser shall, without prejudice to its other remedies under the Contract, deduct from amounts payable, as a penalty, a sum as stated herein for each day of the delay until actual Delivery or performance.

The penalty for this contract shall be **[1% of the value of the applicable Purchase Order (excluding VAT) per completed week of delay, up to a maximum of 10% of the Purchase Order value (excluding VAT), shall apply where the Supplier fails to deliver the goods by the agreed delivery date specified in the Purchase Order or confirmed in writing by the Purchaser.**

The penalty shall be calculated from the day following the agreed delivery date until the actual date of delivery. A Credit Note for the total penalty amount shall be submitted upon completion of the Purchase Order requirements.

For example: Project timeline / delivery confirmation of 4 weeks on a Purchase order value of R10,000.00 (Excl Vat)

Week 5:	**Failed to deliver**	**R10,000.00 x 1% = R100.00 (Credit note)**
Week 6:	**Failed to deliver**	**R10,000.00 x 1% = R100.00 (Credit note)**
Week 7:	**Failed to deliver**	**R10,000.00 x 1% = R100.00 (Credit note)**

The credit note would Total R300.00 if supply and/fitment is completed in Week 7]

22.2 The Purchaser shall, without prejudice to its other remedies under the contract, deduct from amounts payable, financial penalties as contained on the Preference Schedule for breaches of the conditions upon which preference points were awarded.

23. Termination for default

Delete the heading of clause 23 and replace with the following:

23. Termination

Add the following to the end of clause 23.1:

If the Supplier fails to remedy the breach in terms of such notice.

Add the following after clause 23.7:

23.8 In addition to the grounds for termination due to default by the Supplier, the Contract may also be terminated:

23.8.1 Upon the death of the Supplier who was a Sole Proprietor, or a sole member of a Close Corporation, in which case the contract will terminate forthwith.

23.8.2 If the Parties, by mutual agreement, terminate the Contract.

23.8.3 If a material irregularity vitiates the procurement process leading to the conclusion of the Contract, rendering the procurement process and the conclusion of the resulting Contract unfair, inequitable, non-transparent, uncompetitive or not cost-effective the Contract may be terminated by the Purchaser (upon conclusion of applicable processes by the City Manager as described in the Purchaser's SCM Policy).

23.8.4 Reputational risk or harm to the Purchaser

The Purchaser, without prejudice to any other remedy for breach of contract, by written notice of default sent to the Supplier, may terminate the contract if the implementation of the contract may result in reputational risk or harm to the Purchaser as a result of (inter alia):

a) reports of poor governance and/or unethical behaviour;
b) association with known notorious individuals and family of notorious individuals;
c) poor performance issues, known to the Purchaser
d) negative social media reports;
e) adverse assurance (e.g. due diligence) report outcomes; or
f) circumstances where the relevant vendor has employed, or is directed by, anyone who was previously employed in the service of the state (as defined in clause 1.53), where the person is or was negatively implicated in any SCM irregularity.

By or in relation to the Supplier, the Contract may be terminated by the Purchaser after providing notice to the Supplier.

23.9 If the Contract is terminated in terms of clause 23.8, all obligations that were due and enforceable prior to the date of the termination, must be performed by the relevant Party.

26. Termination for insolvency

Delete clause 26.1 and replace with the following:

26.1 In the event of the Supplier becoming bankrupt or otherwise insolvent the Purchaser may elect to:

26.1.1 At any time, terminate the Contract by giving written notice to the Supplier; or
26.1.2 Accept a Supplier's proposal (via the liquidator) to render delivery utilising the appropriate contractual mechanisms or takes steps to ensure its rights are protected and any negative impact on service delivery is mitigated.

26.2 In the event of the Purchaser electing to cancel the Contract in accordance with clause 26.1.1 above, the Purchaser shall make payment of all verified and signed off invoices. In the event of there being any dispute in respect of any outstanding invoices such dispute shall be dealt with in accordance with the dispute resolution mechanism in the Contract.

27. Settlement of Disputes

Amend clause 27.1 as follows:

27.1 If any dispute or difference of any kind whatsoever, with the exception of termination in terms of clause 23 arises between the Purchaser and the Supplier in connection with or arising out of the Contract, the Parties shall make every effort to resolve such dispute or difference amicably, by mutual consultation.

Delete Clause 27.2 in its entirety and replace with the following:

27.2 Should the Parties fail to resolve any dispute by way of mutual consultation, either party shall be entitled to refer the matter for mediation before an independent and impartial person appointed by the City Manager in accordance with Regulation 50(1) of the Local Government: Municipal Finance Management Act, 56 of 2003 – Municipal Supply Chain Management Regulations (Notice 868 of 2005). Such referral shall be done by either party giving written notice to the other of its intention to commence with mediation. No mediation may be commenced unless such notice is given to the other party.

Irrespective whether the mediation resolves the dispute, the Parties shall bear their own costs concerning the mediation and share the costs of the mediator and related costs equally.

The mediator shall agree the procedures, representation and dates for the mediation process with the Parties. The mediator may meet the Parties together or individually to enable a settlement.

Where the Parties reach settlement of the dispute or any part thereof, the mediator shall record such agreement and on signing thereof by the Parties the agreement shall be final and binding.

Save for reference to any portion of any settlement or decision which has been agreed to be final and binding on the Parties, no reference shall be made by or on behalf of either party in any subsequent court proceedings, to any outcome of an amicable settlement by mutual consultation, or the fact that any particular evidence was given, or to any submission, statement or admission made in the course of amicable settlement by mutual consultation or mediation.

28. Limitation of Liability

Delete clause 28.1 (a) and (b) and replace with the following:

(a) notwithstanding any provision to the contrary contained in this contract, neither the supplier nor any of its officers, directors, employees, agents contractors, consultants or other representatives shall be liable to the purchaser, whether in contract, tort, or otherwise, for any indirect, incidental, special or consequential loss or damage of any kind, including without limitation the loss of use, loss of production, or loss of profits or interest costs, loss of goodwill, lost or damaged data or software, costs of substitute products/services and/or loss of business or business opportunities (whether foreseeable or unforeseeable), provided that this exclusion shall not apply to any obligation of the supplier to pay penalties and/or damages to the purchaser;

(b) the aggregate liability of the Supplier to the Purchaser, whether under the Contract, in tort or otherwise, shall not exceed the sums insured in terms of clause 11 in respect of insurable events,

or where no such amounts are stated, to an amount equal to twice the Contract price, provided that this limitation shall not apply to the cost of repairing or replacing defective equipment.

Add the following after clause 28.1:

28.2 Without detracting from, and in addition to, any of the other indemnities in this Contract, the Supplier shall be solely liable for and hereby indemnifies and holds harmless the Purchaser against all claims, charges, damages, costs, actions, liability, demands and/or proceedings and expense in connection with:

a) personal injury or loss of life to any individual;
b) loss of or damage to property;

arising from, out of, or in connection with the performance by the Supplier in terms of this Contract, save to the extent caused by the gross negligence or wilful misconduct of the Purchaser.

28.3 The Supplier and/or its employees, agents, concessionaires, suppliers, sub-contractors or customers shall not have any claim of any nature against the purchaser for any loss, damage, injury or death which any of them may directly or indirectly suffer, whether or not such loss, damages, injury or death is caused through negligence of the Purchaser or its agents or employees.

28.4 Notwithstanding anything to the contrary contained in this Contract, under no circumstances whatsoever, including as a result of its negligent (including grossly negligent) acts or omissions or those of its servants, agents or contractors or other persons for whom in law it may be liable, shall any party or its servants (in whose favour this constitutes a *stipulatio alteri*) be liable for any indirect, extrinsic, special, penal, punitive, exemplary or consequential loss or damage of any kind whatsoever, whether or not the loss was actually foreseen or reasonably foreseeable), sustained by the other party, its directors and/or servants, including but not limited to any loss of profits, loss of operation time, corruption or loss of information and/or loss of contracts.

28.5 Each party agrees to waive all claims against the other insofar as the aggregate of compensation which might otherwise be payable exceeds the aforesaid maximum amounts payable.

31. Notices

Delete clauses 31.1 and 31.2 and replace with the following:

31.1 Any notice, request, consent, approvals or other communications made between the Parties pursuant to the Contract shall be in writing and forwarded to the addresses specified in the Contract and may be given as set out hereunder and shall be deemed to have been received when:

a) hand delivered – on the day delivery of delivery or the next Working Day,
b) sent by registered mail – five (5) Working Days after mailing,
c) sent by email or telefax – one (1) Working Day after transmission.

32. Taxes and Duties

Delete the final sentence of 32.3 and replace with the following:

. In this regard, it is the responsibility of the Tenderer to submit evidence in the form of a valid Tax Compliance Status PIN issued by SARS to the CCT at the Supplier Management Unit located within the Supplier Management / Registration Office, 2nd Floor (Concourse Level), Civic Centre, 12 Hertzog Boulevard, Cape Town (Tel 021 400 9242/3/4/5), or included with this tender.

Add the following after clause 32.3:

32.4 The VAT registration number of the CCT is 4500193497.

ADDITIONAL CONDITIONS OF CONTRACT

Add the following Clause after Clause 34:

35. Reporting Obligations

35.1 The Supplier shall complete, sign and submit with each delivery note, all the documents as required in the

Specifications including Monthly Project Labour Reports (Annexure B). Any failure in this regard may result in a delay in the processing of payments.

36. **ESTABLISHMENT OF THE WORKSHOP FACILITY OR FACILITIES FOR THE SUPPORT, REPAIRS AND MAINTENANCE ACTIVITIES OF CATEGORY 1 AND CATEGORY 2 AS SPECIFIED WITHIN THE GEOGRAPHICAL BOUNDARIES OF THE CITY OF CAPE TOWN, WITHIN NINETY (90) DAYS FROM COMMENCEMENT OF CONTRACT.**

36.1 The supplier must within ninety (90) days from commencement of the contract, establish a Workshop Facility or submit proof of a agreement for the support, repair and maintenance of Category 1 and 2 within the Geographical Boundaries of the City of Cape Town (a graphic depiction of the aforesaid Geographical Boundaries is attached to the Specifications marked Addendum '1'.)

36.2 The City of Cape Town shall perform only one (1) technical assessment of the Workshop Facility mentioned in clause 36.1 above, to confirm that it complies with the requirements set out and otherwise meets the requirements necessary for the supplier to render the support, repairs and maintenance services contemplated in this contract and to meet its obligations.

36.3 Should the supplier fail to establish a Workshop Facility and/or agreements which complies with the aforementioned requirements, within the ninety (90) days mentioned in clause 36.1 above or a reduced period as contemplated in clause 36.3 below, this shall be a material breach of the contract and the City shall be entitled to terminate the contract forthwith and without further notice to the supplier.The date on which the aforementioned technical assessment shall be held, will not exceed two (2) weeks from expiry of the ninety (90) days period.

36.4 The supplier may inform the City of Cape Town that it is ready for the technical assessment referred to in clause 36.2 above, earlier than the ninety (90) day period mentioned in clause 36.1 above, in which case the supplier shall forfeit the remaining days of the aforementioned period and the City of Cape Town shall be entitled to conduct the technical assessment at an agreed date and time between the parties, which shall not exceed two (2) weeks from receipt from the suppliers notification in terms of this clause.

36.5 The supplier shall cooperate fully and in good faith with the City of Cape Town in arranging for and assisting the City of Cape Town with the technical assessment referred to in clause 36.2 above, including but not limited to providing the City of Cape Town with access to all parts of the Workshop Facility and/or agreements during that assessment and demonstrating to the City all aspects of the Facility relevant for the aforementioned technical assessment.

36.6 Notwithstanding the contents of 36.1 to 36.4 above, the City of Cape Town reserves the right, at its sole discretion and on fourteen (14) days notice, to peform technical assessments of the Workshop Facility and/or agreements during the tenure of the contract as and when required, to ensure that the Workshop Facility and/or agreements meets the requirements for the support, repairs and servicing of the specified items and otherwise meets the requirements necessary for the supplier to render the services contemplated in this contract and to meet its obligations. Should the outcome of the technical assessment be that the Workshop Facility and/or agreements is not compliant with the aforesaid requirement, this shall be a material breach of the contract.

The tenderers are to note that the information listed below is not intended to be a comprehensive list of the workshop requirements but rather what is expected of the workshop. The City reserves the right to verify the information provided by the vendor.

COMPANY NAME	
HEAD OFFICE ADDRESS	
WORKSHOP ADDRESS	

GPS CO ORDINATES	**LONGITUDE**		**LATITUDE**	
ITEM		**CONFIRM WITH A TICK**	**COMMENT**	
THE WORKSHOP				
Workshop floor area		m^2		
Fully enclosed workshop				
Concrete floor suitable for scope of work				
Spray booth with extraction system				
General repairs, welding, cutting area				
Machine shop section				
Paint mixing room with adequate ventilation				
Spray guns;				
Adequate pressure hoses;				
Polishing machines;				
Trolley jack				
Trestle stands				
Suitable compressor				
Tool store				
Battery charging bay				
FACILITIES				
Rest room / Staff / Client toilets				
HEALTH AND SAFETY				
Personal Protective Equipment Store				
Safety signage				
First Aid Kit				
TYPICAL IN HOUSE MACHINERY - IN SUPPORT OF A FULL RANGE OF MOTOR BODY BUILDING, REPAIRS AND MAINTENANCE INTERVENTIONS.				
Drill press, Bench Grinders				
Arc, CO2, MIG and/or TIG welders				
Oxygen/acetylene flashback arrestors				
Hydraulic press				
Overhead gantry cranes, jig cranes				
ARTISAN / SKILLED WORKER TOOLS				
Tool box / cabinets with essential trade tools.				
SECURITY				
Security system in place				
ENVIRONMENTAL				
Effluent to storm water prevented				
Effluent to sewer via working oil traps				
Oil spillage containment procedures – spill kits				
FIRE PROTECTION				
Fire Extinguishers				

C.7 GENERAL CONDITIONS OF CONTRACT

(National Treasury - General Conditions of Contract (revised July 2010))

TABLE OF CLAUSES

1. Definitions
2. Application
3. General
4. Standards
5. Use of contract documents and information; inspection
6. Patent rights
7. Performance security
8. Inspections, tests and analysis
9. Packing
10. Delivery and documents
11. Insurance
12. Transportation
13. Incidental services
14. Spare parts
15. Warranty
16. Payment
17. Prices
18. Contract amendments
19. Assignment
20. Subcontracts
21. Delays in the supplier's performance
22. Penalties
23. Termination for default
24. Dumping and countervailing duties
25. Force majeure
26. Termination for insolvency
27. Settlement of disputes
28. Limitation of liability
29. Governing language
30. Applicable law
31. Notices
32. Taxes and duties
33. National Industrial Participation Programme (NIPP)
34. Prohibition of restrictive practices

1. Definitions

1. The following terms shall be interpreted as indicated:

1.1 'Closing time' means the date and hour specified in the bidding documents for the receipt of bids.

1.2 'Contract' means the written agreement entered into between the purchaser and the supplier, as recorded in the contract form signed by the Parties, including all attachments and appendices thereto and all documents incorporated by reference therein.

1.3 'Contract price' means the price payable to the supplier under the contract for the full and proper performance of his or her contractual obligations.

1.4 'Corrupt practice' means the offering, giving, receiving, or soliciting of anything of value to influence the action of a public official in the procurement process or in contract execution.

1.5 'Countervailing duties' are imposed in cases in which an enterprise abroad is subsidised by its government and encouraged to market its products internationally.

1.6 'Country of origin' means the place where the goods were mined, grown or produced or from which the services are supplied. Goods are produced when, through manufacturing, processing or substantial and major assembly of components, a commercially recognised new product results that is substantially different in basic characteristics or in purpose or utility from its components.

1.7 'Day' means calendar day.

1.8 'Delivery' means delivery in compliance with the conditions of the contract or order.

1.9 'Delivery ex stock' means immediate delivery directly from stock actually on hand.

1.10 'Delivery into consignee's store or to his site' means delivered and unloaded in the specified store or depot or on the specified site in compliance with the conditions of the contract or order, the supplier bearing all risks and charges involved until the supplies are so delivered and a valid receipt is obtained.

1.11 'Dumping' occurs when a private enterprise abroad markets its goods on its own initiative in the RSA at lower prices than that of the country of origin, and which action has the potential to harm the local industries in the RSA.

1.12 'Force majeure' means an event beyond the control of the supplier, not involving the supplier's fault or negligence, and not foreseeable. Such events may include, but are not restricted to, acts of the purchaser in its sovereign capacity, wars or revolutions, fires, floods, epidemics, quarantine restrictions and freight embargoes.

1.13 'Fraudulent practice' means a misrepresentation of facts in order to influence a procurement process or the execution of a contract to the detriment of any bidder, and includes collusive practice among bidders (prior to or after bid submission) designed to establish bid prices at artificial, non-competitive levels and to deprive the bidder of the benefits of free and open competition.

1.14 'GCC' means the General Conditions of Contract.

1.15 'Goods' means all of the equipment, machinery, and/or other materials that the supplier is required to supply to the purchaser under the contract.

1.16 'Imported content' means that portion of the bidding price represented by the cost of components, parts or materials which have been or are still to be imported (whether by the supplier or his subcontractors) and
which costs are inclusive of the costs abroad, plus freight and other direct importation costs such as landing costs, dock dues, import duty, sales duty or other similar tax or duty at the South African place of entry as well as transportation and handling charges to the factory in the Republic where the supplies covered by the bid will be manufactured.

1.17 'Local content' means that portion of the bidding price which is not included in the imported content, provided that local manufacture does take place.

1.18 'Manufacture' means the production of products in a factory using labour, materials, components and machinery, and includes other, related value-adding activities.

1.19 'Order' means an official written order issued for the supply of goods or works or the rendering of a service.

1.20 'Project site', where applicable, means the place indicated in bidding documents.

1.21 'Purchaser' means the organisation purchasing the goods.

1.22 'Republic' means the Republic of South Africa.

1.23 'SCC' means the Special Conditions of Contract.

1.24 'Services' means those functional services ancillary to the supply of the goods, such as transportation and any other incidental services, such as installation, commissioning, provision of technical assistance, training, catering, gardening, security, maintenance, and other such obligations of the supplier covered under the contract.

1.25 'Written' or 'in writing' means handwritten in ink or any form of electronic or mechanical writing.

2. Application

2.1 These general conditions are applicable to all bids, contracts and orders, including bids for functional and professional services, sales, hiring, letting and the granting or acquiring of rights, but excluding immovable property, unless otherwise indicated in the bidding documents.

2.2 Where applicable, special conditions of contract are also laid down to cover specific supplies, services or works.

2.3 Where such special conditions of contract are in conflict with these general conditions, the special conditions shall apply.

3. General

3.1 Unless otherwise indicated in the bidding documents, the purchaser shall not be liable for any expense incurred in the preparation and submission of a bid. Where applicable, a non-refundable fee for documents may be charged.

3.2 With certain exceptions, invitations to bid are only published in the Government Tender Bulletin. The Government Tender Bulletin may be obtained directly from the Government Printer, Private Bag X85, Pretoria 0001, or accessed electronically from www.treasury.gov.za.

4. Standards

4.1 The goods supplied shall conform to the standards mentioned in the bidding documents and specifications.

5. Use of contract documents and information; inspection.

5.1 The supplier shall not, without the purchaser's prior written consent, disclose the contract, or any provision thereof, or any specification, plan, drawing, pattern, sample, or information furnished by or on behalf of the purchaser in connection therewith, to any person other than a person employed by the supplier in the performance of the contract. Disclosure to any such employed person shall be made in confidence and shall extend only as far as may be necessary for the purposes of such performance.

5.2 The supplier shall not, without the purchaser's prior written consent, make use of any document or information mentioned in GCC clause 5.1, except for purposes of performing the contract.

5.3 Any document, other than the contract itself, mentioned in GCC clause 5.1 shall remain the property of the purchaser and shall be returned (all copies) to the purchaser on completion of the supplier's performance under the contract if so required by the purchaser.

5.4 The supplier shall permit the purchaser to inspect the supplier's records relating to the performance of the supplier and to have them audited by auditors appointed by the purchaser, if so required by the purchaser.

6. Patent rights

6.1 The supplier shall indemnify the purchaser against all third-party claims of infringement of patent, trademark, or industrial design rights arising from the use of the goods or any part thereof by the purchaser.

7. Performance Security

7.1 Within 30 (thirty) days of receipt of the notification of contract award, the successful bidder shall furnish to the purchaser the performance security of the amount specified in the SCC.

7.2 The proceeds of the performance security shall be payable to the purchaser as compensation for any loss resulting from the supplier's failure to complete his obligations under the contract.

1.3 The performance security shall be denominated in the currency of the contract or in a freely convertible currency acceptable to the purchaser, and shall be in one of the following forms:

a) a bank guarantee or an irrevocable letter of credit issued by a reputable bank located in the purchaser's country or abroad, acceptable to the purchaser, in the form provided in the bidding documents or another form acceptable to the purchaser; or
b) A cashier's or certified cheque.

7.4 The performance security will be discharged by the purchaser and returned to the supplier not later than 30 (thirty) days following the date of completion of the supplier's performance obligations under the contract, including any warranty obligations, unless otherwise specified in the SCC.

8. Inspections, tests and analyses

8.1 All pre-bidding testing will be for the account of the bidder.

8.2 If it is a bid condition that supplies to be produced or services to be rendered should at any stage during production or execution or on completion be subject to inspection, the premises of the bidder or contractor shall be open, at all reasonable hours, for inspection by a representative of the Department or an organisation acting on behalf of the Department.

8.3 If there are no inspection requirements indicated in the bidding documents and no mention of such is made in the contract, but during the contract period it is decided that inspections shall be carried out, the purchaser shall itself make the necessary arrangements, including payment arrangements with the testing authority concerned.

8.4 If the inspections, tests and analyses referred to in clauses 8.2 and 8.3 show the supplies to be in accordance with the contract requirements, the cost of the inspections, tests and analyses shall be defrayed by the purchaser.

8.5 Where the supplies or services referred to in clauses 8.2 and 8.3 do not comply with the contract requirements, irrespective of whether such supplies or services are accepted or not, the cost in connection with these inspections, tests or analyses shall be defrayed by the supplier.

8.6 Supplies and services which are referred to in clauses 8.2 and 8.3 and which do not comply with the contract requirements may be rejected.

8.7 Any contract supplies may on or after delivery be inspected, tested or analysed and may be rejected if found not to comply with the requirements of the contract. Such rejected supplies shall be held at the cost and risk of the supplier, who shall, when called upon, remove them immediately at his own cost and forthwith substitute them with supplies which do comply with the requirements of the contract. Failing such removal, the rejected supplies shall be returned at the suppliers cost and risk. Should the supplier fail to provide the substitute supplies forthwith, the purchaser may, without giving the supplier further opportunity to substitute the rejected supplies, purchase such supplies as may be necessary at the expense of the supplier.

8.8 The provisions of clauses 8.4 to 8.7 shall not prejudice the right of the purchaser to cancel the contract on account of a breach of the conditions thereof, or to act in terms of Clause 23 of the GCC.

9. Packing

9.1 The supplier shall provide such packing of the goods as is required to prevent their damage or deterioration during transit to their final destination, as indicated in the contract. The packing shall be sufficient to withstand, without limitation, rough handling during transit and exposure to extreme temperatures, salt and precipitation during transit, and open storage. Packing, case size and weights shall take into consideration, where appropriate, the remoteness of the goods' final destination and the absence of heavy handling facilities at all points in transit.

9.2 The packing, marking, and documentation within and outside the packages shall comply strictly with such special requirements as shall be expressly provided for in the contract, including additional requirements, if any, specified in the SCC, and in any subsequent instructions ordered by the purchaser.

10. Delivery and documents

10.1 Delivery of the goods shall be made by the supplier in accordance with the terms specified in the contract. The details of shipping and/or other documents to be furnished by the supplier are specified in the SCC.

10.2 Documents to be submitted by the supplier are specified in the SCC.

11. Insurance

11.1 The goods supplied under the contract shall be fully insured, in a freely convertible currency, against loss or damage incidental to manufacture or acquisition, transportation, storage and delivery in the manner specified in the SCC.

12. Transportation

12.1 Should a price other than an all-inclusive delivered price be required, this shall be specified in the SCC.

13. Incidental Services

13.1 The supplier may be required to provide any or all of the following services, including additional services (if any) specified in the SCC:

(a) performance or supervision of on-site assembly, and/or commissioning of the supplied goods;
(b) furnishing of tools required for the assembly and/or maintenance of the supplied goods;
(c) furnishing of a detailed operations and maintenance manual for each appropriate unit of the supplied goods;
(d) performance or supervision or maintenance and/or repair of the supplied goods, for a period of time agreed by the Parties, provided that this service shall not relieve the supplier of any warranty obligations under this contract; and
(e) training of the purchaser's personnel, at the supplier's plant and/or on-site, in assembly, start-up, operation, maintenance, and/or repair of the supplied goods.

13.2 Prices charged by the supplier for incidental services, if not included in the contract price for the goods, shall be agreed upon in advance by the Parties and shall not exceed the prevailing rates charged to other Parties by the supplier for similar services.

14. Spare parts

14.1 As specified in the SCC, the supplier may be required to provide any or all of the following materials, notifications, and information pertaining to spare parts manufactured or distributed by the supplier:

(a) such spare parts as the purchaser may elect to purchase from the supplier, provided that this election shall not relieve the supplier of any warranty obligations under the contract; and
(b) in the event of termination of production of the spare parts:

(i) Advance notification to the purchaser of the pending termination, in sufficient time to permit the purchaser to procure needed requirements; and

(ii) following such termination, furnishing at no cost to the purchaser, the blueprints, drawings, and specifications of the spare parts, if requested.

15. Warranty

15.1 The supplier warrants that the goods supplied under the contract are new, unused, of the most recent or current models, and that they incorporate all recent improvements in design and materials unless provided otherwise in the contract. The supplier further warrants that all goods supplied under this contract shall have no defect arising from design, materials, or workmanship (except when the design and/or material is required by the purchaser's specifications), or from any act or omission of the supplier, that may develop under normal use of the supplied goods in the conditions prevailing in the country of final destination.

15.2 This warranty shall remain valid for 12 (twelve) months after the goods, or any portion thereof, as the case may be, have been delivered to and accepted at the final destination indicated in the contract, or for 18 (eighteen) months after the date of shipment from the port or place of loading in the source country, whichever period concludes earlier, unless specified otherwise in the SCC.

15.3 The purchaser shall notify the supplier promptly, in writing, of any claims arising under this warranty.

15.4 Upon receipt of such notice, the supplier shall, within the period specified in the SCC and with all reasonable speed, repair or replace the defective goods or parts thereof, without costs to the purchaser.

15.5 If the supplier, having been notified, fails to remedy the defect(s) within the period specified in the SCC, the purchaser may proceed to take such remedial action as may be necessary, at the supplier's risk and expense and without prejudice to any other rights which the purchaser may have against the supplier under the contract.

16. Payment

16.1 The method and conditions of payment to be made to the supplier under this contract shall be specified in the SCC.

16.2 The supplier shall furnish the purchaser with an invoice accompanied by a copy of the delivery note and upon fulfilment of any other obligations stipulated in the contract.

16.3 Payments shall be made promptly by the purchaser, but in no case later than 30 (thirty) days after submission of an invoice or claim by the supplier.

16.4 Payment will be made in Rand unless otherwise stipulated in the SCC.

17. Prices

17.1 Prices charged by the supplier for goods delivered and services performed under the contract shall not vary from the prices tendered by the supplier in his bid, with the exception of any price adjustments authorized in the SCC or in the purchaser's request for bid validity extension, as the case may be.

18. Contract Amendments

18.1 No variation in or modification of the terms of the contract shall be made except by written amendment signed by the Parties concerned.

19. Assignment

19.1 The supplier shall not assign, in whole or in part, its obligations to perform under the contract, except with the purchaser's prior written consent.

20. Subcontracts

20.1 The supplier shall notify the purchaser in writing of all subcontracts awarded under this contract if not already specified in the bid. Such notification, in the original bid or later, shall not relieve the supplier from any liability or obligation under the contract.

21. Delays in the supplier's performance

21.1 Delivery of the goods and performance of services shall be made by the supplier in accordance with the time schedule prescribed by the purchaser in the contract.

21.2 If at any time during the performance of the contract, the supplier or its subcontractor(s) should encounter conditions impeding timely delivery of the goods and performance of services, the supplier shall promptly notify the purchaser in writing of the fact of the delay, its likely duration and its cause(s). As soon as practicable after receipt of the supplier's notice, the purchaser shall evaluate the situation and may at his or her discretion extend the supplier's time for performance, with or without the imposition of penalties, in which case the extension shall be ratified by the Parties by amendment of contract.

21.3 No provision in a contract shall be deemed to prohibit the obtaining of supplies or services from a national department, provincial department, or a local authority.

21.4 The right is reserved to procure, outside of the contract, small quantities of supplies; or to have minor essential services executed if an emergency arises, or the supplier's point of supply is not situated at or near the place where the supplies are required, or the supplier's services are not readily available.

21.5 Except as provided under GCC Clause 25, a delay by the supplier in the performance of its delivery obligations shall render the supplier liable to the imposition of penalties, pursuant to GCC Clause 22, unless an extension of time is agreed upon pursuant to GCC Clause 21.2 without the application of penalties.

21.6 Upon any delay beyond the delivery period in the case of a supplies contract, the purchaser shall, without cancelling the contract, be entitled to purchase supplies of a similar quality and up to the same quantity in
substitution of the goods not supplied in conformity with the contract and to return any goods delivered later at the supplier's expense and risk, or to cancel the contract and buy such goods as may be required to complete the contract and, without prejudice to his other rights, be entitled to claim damages from the supplier.

22. Penalties

22.1 Subject to GCC Clause 25, if the supplier fails to deliver any or all of the goods or to perform the services within the period(s) specified in the contract, the purchaser shall, without prejudice to its other remedies under the contract, deduct from the contract price, as a penalty, a sum calculated on the delivered price of the delayed goods or unperformed services, using the current prime interest rate, calculated for each day of the delay until actual delivery or performance. The purchaser may also consider termination of the contract pursuant to GCC Clause 23.

23. Termination for default

23.1 The purchaser, without prejudice to any other remedy for breach of contract, by written notice of default sent to the supplier, may terminate this contract in whole or in part:

(a) if the supplier fails to deliver any or all of the goods within the period(s) specified in the contract, or within any extension thereof granted by the purchaser pursuant to GCC Clause 21.2;
(b) if the supplier fails to perform any other obligation(s) under the contract; or
(c) if the supplier, in the judgment of the purchaser, has engaged in corrupt or fraudulent practices in competing for or in executing the contract.

23.2 In the event the purchaser terminates the contract in whole or in part, the purchaser may procure, upon such terms and in such manner as it deems appropriate, goods, works or services similar to those undelivered, and the supplier shall be liable to the purchaser for any excess costs for such similar goods, works or services. However, the supplier shall continue performance of the contract to the extent not terminated.

23.3 Where the purchaser terminates the contract in whole or in part, the purchaser may decide to impose a restriction penalty on the supplier by prohibiting such supplier from doing business with the public sector for a period not exceeding 10 years.

23.4 If a purchaser intends imposing a restriction on a supplier or any person associated with the supplier, the supplier will be allowed a time period of not more than 14 (fourteen) days to provide reasons why the envisaged restriction should not be imposed. Should the supplier fail to respond within the stipulated 14 (fourteen) days the purchaser may regard the intended penalty as not objected against and may impose it on the supplier.

23.5 Any restriction imposed on any person by the Accounting Officer/Authority will, at the discretion of the Accounting Officer/Authority, also be applicable to any other enterprise or any partner, manager, director or other person who wholly or partly exercises or exercised or may exercise control over the enterprise of the first-mentioned person, and with which enterprise or person the first-mentioned person is or was, in the opinion of the Accounting Officer/Authority, actively associated.

23.6 If a restriction is imposed, the purchaser must, within 5 (five) working days of such imposition, furnish the National Treasury with the following information:
(i) the name and address of the supplier and/or person restricted by the purchaser;
(ii) the date of commencement of the restriction;
(iii) the period of restriction; and
(iv) the reasons for the restriction.

These details will be loaded in the National Treasury's central database of suppliers or persons prohibited from doing business with the public sector.

23.7 If a court of law convicts a person of an offence as contemplated in sections 12 or 13 of the Prevention and Combating of Corrupt Activities Act, Act 12 of 2004, the court may also rule that such person's name be endorsed on the Register for Tender Defaulters. When a person's name has been endorsed on the Register, the person will be prohibited from doing business with the public sector for a period of not less than five years and not more than 10 years. The National Treasury is empowered to determine the period of restriction, and each case will be dealt with on its own merits. According to section 32 of the Act the Register must be open to the public. The Register can be perused on the National Treasury website.

24. Anti-dumping and countervailing duties and rights

24.1 When, after the date of bid, provisional payments are required, or anti-dumping or countervailing duties are imposed, or the amount of a provisional payment or anti-dumping or countervailing right is increased in respect of any dumped or subsidised import, the State is not liable for any amount so required or imposed, or for the amount of any such increase. When, after the said date, such a provisional payment is no longer required or any such anti-dumping or countervailing right is abolished, or where the amount of such provisional payment or any such right is reduced, any such favourable difference shall, on demand, be paid forthwith by the contractor to the State, or the State may deduct such amounts from moneys (if any) which may otherwise be due to the contractor in regard to supplies or services which he or she delivered or rendered, or is to deliver or render in terms of the contract or any other contract or any other amount which may be due to him or her.

25. Force majeure

25.1 Notwithstanding the provisions of GCC Clauses 22 and 23, the supplier shall not be liable for forfeiture of its performance security, damages, or termination for default if, and to the extent that, his delay in performance or other failure to perform his obligations under the contract is the result of an event of force majeure.

25.2 If a force majeure situation arises, the supplier shall notify the purchaser promptly, in writing, of such condition and the cause thereof. Unless otherwise directed by the purchaser in writing, the supplier shall continue to perform its obligations under the contract as far as is reasonably practical, and shall seek all reasonable alternative means for performance not prevented by the force majeure event.

26. Termination for insolvency

26.1 The purchaser may at any time terminate the contract by giving written notice to the supplier if the supplier becomes bankrupt or otherwise insolvent. In this event, termination will be without compensation to the supplier, provided that such termination will not prejudice or affect any right of action or remedy which has accrued or will accrue thereafter to the purchaser.

27. Settlement of Disputes

27.1 If any dispute or difference of any kind whatsoever arises between the purchaser and the supplier in connection with or arising out of the contract, the Parties shall make every effort to resolve such dispute or difference amicably, by mutual consultation.

27.2 If, after 30 (thirty) days, the Parties have failed to resolve their dispute or difference by such mutual consultation, then either the purchaser or the supplier may give notice to the other party of his intention to commence with mediation. No mediation in respect of this matter may be commenced unless such notice is given to the other party.

27.3 Should it not be possible to settle a dispute by means of mediation, it may be settled in a South African court of law.

27.4 Mediation proceedings shall be conducted in accordance with the rules of procedure specified in the SCC.

27.5 Notwithstanding any reference to mediation and/or court proceedings herein,
(a) the Parties shall continue to perform their respective obligations under the contract unless they otherwise agree; and
(b) the purchaser shall pay the supplier any monies due to the supplier.

28. Limitation of Liability

28.1 Except in cases of criminal negligence or wilful misconduct, and in the case of infringement pursuant to Clause 6:
(a) the supplier shall not be liable to the purchaser, whether in contract, tort, or otherwise, for any indirect or consequential loss or damage, loss of use, loss of production, or loss of profits or interest costs, provided that this exclusion shall not apply to any obligation of the supplier to pay penalties and/or damages to the purchaser; and
(b) the aggregate liability of the supplier to the purchaser, whether under the contract, in tort or otherwise, shall not exceed the total contract price, provided that this limitation shall not apply to the cost of repairing or replacing defective equipment.

29. Governing language

29.1 The contract shall be written in English. All correspondence and other documents pertaining to the contract that is exchanged by the Parties shall also be written in English.

30. Applicable Law

30.1 The contract shall be interpreted in accordance with South African laws, unless otherwise specified in the SCC.

31. Notices

31.1 Every written acceptance of a bid shall be posted to the supplier concerned by registered or certified mail, and any other notice to him shall be posted by ordinary mail, to the address furnished in his bid or to the address notified later by him in writing; and such posting shall be deemed to be proper service of such notice.

31.2 The time mentioned in the contract documents for performing any act after such aforesaid notice has been given, shall be reckoned from the date of posting of such notice.

32. Taxes and Duties

32.1 A foreign supplier shall be entirely responsible for all taxes, stamp duties, licence fees, and other such levies imposed outside the purchaser’s country.

32.2 A local supplier shall be entirely responsible for all taxes, duties, licence fees, etc., incurred until delivery of the contracted goods to the purchaser.

32.3 No contract shall be concluded with any bidder whose tax matters are not in order. Prior to the award of a bid the Department must be in possession of a tax clearance certificate submitted by the bidder. This certificate must be an original issued by the South African Revenue Services.

33. National Industrial Participation (NIP) Programme

33.1 The NIP Programme administered by the Department of Trade and Industry shall be applicable to all contracts that are subject to the NIP obligation.

34 Prohibition of Restrictive practices

34.1 In terms of section 4 (1) (b) (iii) of the Competition Act, Act 89 of 1998, as amended, an agreement between or concerted practice by firms, or a decision by an association of firms, is prohibited if it is between Parties in a horizontal relationship and if a bidder(s) is/are or a contractor(s) was/were involved in collusive bidding (or bid rigging).

34.2 If a bidder(s) or contractor(s), based on reasonable grounds or evidence obtained by the purchaser, has/have engaged in the restrictive practice referred to above, the purchaser may refer the matter to the Competition Commission for investigation and possible imposition of administrative penalties as contemplated in the Competition Act, Act 89 of 1998.

34.3 If a bidder(s) or contractor(s) has/have been found guilty by the Competition Commission of the restrictive practice referred to above, the purchaser may, in addition and without prejudice to any other remedy provided for, invalidate the bid(s) for such item(s) offered, and/or terminate the contract in whole or part, and/or restrict the bidder(s) or contractor(s) from conducting business with the public sector for a period not exceeding 10 (ten) years and/or claim damages from the bidder(s) or contractor(s) concerned.

C.8 ANNEXURES

Annexure A – Pro Forma Insurance Broker's Warranty

Broker Logo

Letterhead of supplier's Insurance Broker

Date _____

CCT
City Manager
Civic Centre
12 Hertzog Boulevard
Cape Town
8000

Dear Sir

TENDER NO.: ***31G/2026/27***
TENDER DESCRIPTION: THE SUPPLY, INSTALLATION AND REPAIR OF ALUMINIUM SWOPPABLE BODIES, CANOPIES AND STORAGE COMPARTMENTS IN CITY OF CAPE TOWN VEHICLES

NAME OF SUPPLIER: _____

I, the undersigned, do hereby confirm and warrant that all the insurances required in terms of the abovementioned contract have been issued and/or in the case of blanket/umbrella policies, have been endorsed to reflect the interests of the CCT with regard to the abovementioned contract, and that all the insurances and endorsements, etc., are all in accordance with the requirements of the contract.

I furthermore confirm that all premiums in the above regard have been paid.

Yours faithfully

Signed: _____

For: _____ *(Supplier's Insurance Broker)*

Annexure B – Monthly Project Labour Report

ANNEX 1

CITY OF CAPE TOWN
MONTHLY PROJECT LABOUR REPORT

CITY OF CAPE TOWN
ISIXEKO SASEKAPA
STAD KAAPSTAD

Instructions for completing and submitting forms

General

1 The Monthly Project Labour Reports must be completed in full, using typed, proper case characters; alternatively, should a computer not be available, handwritten in black ink.
2 Incomplete / incorrect / illegible forms will not be accepted.
3 Any conditions relating to targeted labour stipulated in the Contract (in the case of contracted out services or works) shall apply to the completion and submission of these forms.
4 This document is available in Microsoft Excel format upon request from the City's EPWP office, tel 021 400 9406, email EPWPLR@capetown.gov.za.

Project Details

5 If a field is not applicable insert the letters: NA
6 Only the Project Number supplied by the Corporate EPWP Office must be inserted. The Project Number can be obtained from the Coordinator or Project Manager or from the e-mail address in point 4 above.
7 On completion of the contract or works project the anticipated end date must be updated to reflect the actual end date.

Beneficiary Details and Work Information

8 Care must be taken to ensure that beneficiary details correspond accurately with the beneficiary's ID document.
9 A new beneficiary is one in respect of which a new employment contract is signed in the current month. A certied ID copy must accompany this labour report on submission.
10 Was the beneficiary sourced from the City's job seeker database?
11 The contract end date as stated in the beneficiary's employment contract.
12 Where a beneficiary has not worked in a particular month, the beneficiary's name shall not be reflected on this form at all for the month in question.
13 Training will be recorded separately from normal working days and together shall not exceed the maximum of 23 days per month
14 Workers earning more than the maximum daily rate (currently R450 excluding any benefits) shall not be reflected on this form at all.

Submission of Forms

15 Signed hardcopy forms must be scanned and submitted to the City's project manager in electronic (.pdf) format, together with the completed form in Microsoft Excel format.
16 Scanned copies of all applicable supporting documentation must be submitted along with each monthly project labour report. Copies of employment contracts and ID documents are only required in respect of new beneficiaries.
17 If a computer is not available hardcopy forms and supporting documentation will be accepted.

PROJECT DETAILS

Numbers in cells below e.g (6) refer to the relevant instruction above for completing and submitting forms

CONTRACT OR WORKS PROJECT NAME: (6)		EPWP SUPPLIED PROJECT NUMBER: (6)	
DIRECTORATE:		DEPARTMENT:	
CONTRACTOR OR VENDOR NAME:		CONTRACTOR OR VENDOR E-MAIL ADDRESS:	
CONTRACTOR OR VENDOR CONTACT PERSON:		CONTRACTOR OR VENDOR TEL. NUMBER:	CELL WORK

PROJECT LABOUR REPORT CURRENT MONTH (mark with "X")

JAN	FEB	MAR	APR	MAY	JUN	JUL	AUG	SEP	OCT	NOV	DEC	YEAR				

ACTUAL START DATE (yyyy/mm/dd)								ANTICIPATED / ACTUAL END DATE (yyyy/mm/dd) (7)							

TOTAL PROJECT EXPENDITURE / VALUE OF WORK DONE TO-DATE (INCLUDING ALL COSTS, BUT EXCLUDING VAT)

R													

ANNEX 1 (continued)

MONTHLY PROJECT LABOUR REPORT

BENEFICIARY DETAILS AND WORK INFORMATION

CITY OF CAPE TOWN
ISIXEKO SASEKAPA
STAD KAAPSTAD

CONTRACT OR WORKS PROJECT NUMBER:		Year	Month	Sheet		
				1	of	

	(8)	(8)	(8)	(9)			(10)		(11)	(12)	(13)	(14)
No.	First name	Surname	ID number	New Beneficiary (Y/N)	Gender (M/F)	Disabled (Y/N)	Job seeker database (Y/N)	Contract start date (DDMMYY)	Contract end date (DDMMYY)	No. days worked this month (excl. training)	Training days	Rate of pay per day (R – c)
1												
2												
3												
4												
5												
6												
7												
8												
9												
10												
11												
12												
13												
14												
15												
16												
17												
18												
19												
20												
										0	0	R -

Declared by Contractor or Vendor to be true and correct:	Name		Signature	
	Date			

Received by Employer's Agent / Representative:	Name		Signature	
	Date			

Annexure C - Pro Forma Performance Security/ Guarantee

Not Applicable

Annexure D - Pro Forma Advance Payment Guarantee

No Applicable

Annexure F - Tender Returnable Documents

F.1: Contract Price Adjustment and/or Rate of Exchange Variation

1. TENDER CONDITIONS

1.1 The Contract Price Adjustment (CPA) mechanism and/or provisions relating to Rate of Exchange (RoE) Variation, contained in this schedule is compulsory and binding on all Tenderers/Suppliers and this schedule (the parts relevant to the particular tender) must be completed by all Tenderers / Suppliers.

1.2 Tenderers/Suppliers are not permitted to amend, vary, alter or delete this schedule or any part thereof unless otherwise stated in this schedule.

1.3 Tenderers are not permitted to offer fixed and firm prices except as provided for in the Price Schedule.

2. CPA PROVISIONS SELECTION

2.1 The prices stipulated on the Price Schedule are subject to adjustment as set out below.

2.2 Tenderer to indicate the specific CPA and/or RoE provisions applicable to their bid by marking the relevant checkboxes below. Tenderers to note that the CPA and/or RoE provisions are not exclusive and multiple CPA Types can exist if the bid contains both local and foreign exchange based pricing. In such cases the CPA and/or ROE provision applies only to that particular portion of the tendered price.

2.3 The CPA and/or RoE provisions applicable to this tender and resulting contract are to be indicated below by checking the relevant boxes (with multiple selections only where indicated permissible):

	Indicate option	CPA Type	Period	Refer to Section
A	**N/A**	**FIRM PRICES** as per Pricing Schedule	Annual	*Pricing Schedule C.4 and Schedule F.1 (A)*
		LOCAL (RSA) TENDER CONTENT:		
		EITHER		
B		SEIFSA Index based CPA	Quarterly	*Schedule F.1 (B)*
		OR		
C		Pricelist / Quotation Based CPA	Ad-Hoc	*Schedule F.1 (C)*
		OR		
D		STATS SA CPI Index Based CPA	Annually	*Schedule F.1 (D)*
		OR/AND		
E	**N/A**	Sectorial Determination 1:Contract Cleaning Sector	Annually	*Schedule F.1 (E)*
		OR		
E	**N/A**	Sectorial Determination 6: Private Security Sector	Annually	*Schedule F.1 (E)*
		IMPORTED GOODS AND / OR COMPONENTS (IF APPLICABLE		
F	**N/A**	ROE based CPA	Ad-Hoc	*Schedule F.1 (F)*
		AND (IF REQUIRED), EITHER		
G	**N/A**	Pricelist / Quotation based CPA	Ad-Hoc / Periodic	*Schedule F.1 (G)*
		OR		
H	**N/A**	Overseas CPI / PPI index based CPA	Ad-Hoc /	*Schedule F.1 (H)*

		Periodic

2.4 CPA and/or RoE provisions marked as **not applicable** is not relevant and will not apply to this tender and resulting contract.

3. CONTRACT CPA APPLICATIONS AND ADMINISTRATION

3.1 Any claim for variation in the contract price (either CPA or RoE adjustments) must be submitted in writing:

i. By letter to: Director **Electricity Generation and Distribution** City of Cape Town, P O Box 655, Cape Town, 8000 or
ii. By email to: **Mogammad.Ryland@capetown.gov.za**

at least 14 days prior to the month upon which the adjustment would become effective in the case of prices being set in advance, and as soon as relevant indices are available and no later than 60 days after the date of delivery of goods or the completion of the project (i.e. date of issue of the Taking-Over Certificate, if applicable) in the case of adjustments being claimed retrospectively for Goods or Services. The latter case is only applicable where specifically provided for in the CPA provisions.

3.2 When submitting a request for CPA and/or RoE adjustment the Supplier shall indicate the Rand Value claimed for each item listed on C.4 - Price Schedule, clearly indicating the item number as per C.4 - Price Schedule. Percentage increases will not be considered. A mere notification of a request for CPA without stating the new price claimed for each item shall, for the purpose of this clause, not be regarded as a valid request.

3.3 The CCT reserves the right to request the Supplier to submit auditor's certificates or such other documentary proof as it may require in order to verify a claim for CPA or RoE adjustments. Price adjustments will not be processed until such time as the Supplier submits such auditor's certificates or other documentary proof to the CCT. Should the Supplier fail to submit the auditor's certificates or other documentary proof to the CCT within 30 days from the written request, it shall be presumed that the Supplier has abandoned his request.

3.4 The CCT reserves the right to withhold payment of any claim for adjustment while only provisional figures are available and until such time as the final (revised) figures are issued by the relevant authority.

3.5 The CCT will confirm in writing once processing of the CPA or RoE adjustments have been completed including the effective date of the adjustments.

3.6 Where pricelist-based and other non-index based CPA requests are investigated and found to be not reasonable and market related, the CCT reserves the right to reject such requests. Where disputes arise with respect to such rejected requests the CCT reserves the right to procure the Goods from other available Suppliers until such time as the dispute is resolved.

3.7 Unless indicated otherwise in the relevant schedule below, the adjustment will apply to all Purchase Orders or Purchase Order lines where the delivery date is on or after the effective date of the adjustment.

F.1 (A) – FIRM PRICES

NOT APPLICABLE

F.1 (B) LOCAL SOUTH AFRICAN CONTENT – SEIFSA INDICES

1. Tenderers/Suppliers that are manufacturers of the tendered goods and that indicate CPA provision above based on SEIFSA Indices shall comply with the conditions specified below and shall complete Table F.1 (B).1: SEIFSA Base Material and Labour Prices in full.

2. Material, labour and / or road freight price variation shall be calculated based upon the SEIFSA base material, labour and / or road freight prices / indices and the price proportions indicated by the Tenderer/Supplier for the Goods tendered, as detailed in Table F.1 (B).1: SEIFSA Base Material and Labour Prices.

3. For items that are also subject to RoE and / or Overseas Pricelist / Quotation based CPA, the SEIFSA index based CPA **shall apply only to the South African Content portion**.

4. A minimum of 10% of the **South African Content portion of** the tender price shall be fixed and free of variation for the duration of the contract.

5. The contract price per item shall be adjusted quarterly accordance with the SEIFSA-based Contract Price Adjustment (CPA) provisions contained herein. The adjusted contract prices approved by the CCT shall apply to deliveries effected during the applicable calendar month, irrespective of the date of issue of the purchase order, subject to compliance with the CPA application process.

6. Fluctuations in the prices of raw materials, labour and road freight will be acceptable for the item price in C.4 Price Schedule, CPA calculations.

7. The base month for CPA calculations shall be the calendar month prior to the month of the closing date for tenders, and SEIFSA indices published in this month shall be used.

8. Adjusted contract prices per item shall be calculated based upon the SEIFSA indices published in the calendar month of application for the amended item contract prices.

9. Material and labour price variation shall be calculated based upon the SEIFSA base material and labour indices and the stipulated price proportions as detailed in Table F.1 (B).1.

10. The process to be followed by Tenderers/Suppliers for claims for CPA in terms of SEIFSA shall be as follows:

    a) The Tenderers/Suppliers shall approach the CCT in writing once every 3 months(quarterly) with an application for the adjustment of the contract prices in C.4 Price Schedule and the amended prices to be applicable to the contract during the following calendar month.

    b) The application shall be based upon the SEIFSA indices published during the calendar month of application (those published on the Monday following the third Friday of the month and detailing the latest available indices) and shall detail the proposed adjusted unit prices for the Items and include detailed calculations indicating how the adjusted unit prices per item have been established.

    c) Calculations of the CPA shall use the original tendered unit rates, the base indices, the indices published in the calendar month of application and the SEIFSA formula and shall contain no other factors or adjustments.

    d) The CCT will check and approve the proposed unit prices for the following month prior to the last day of the month of application. The CCT will notify the Tenderers/Suppliers in writing of approval of the proposed prices.

    e) All purchase orders for the contracted Items shall be issued at the contract unit prices prevailing at the date of issue for administrative purposes only.

    The applicable contract unit price for invoicing and payment shall be the contract unit price approved for the calendar month in which delivery of the Items occurs.

    No additional CPA claim shall be considered outside of the approved SEIFSA adjustment applicable to the month of delivery.

    f) The required delivery dates for orders placed by the Employer for the contracted Items will be determined based upon the date of issue of the purchase order and the contract delivery period. Where delivery occurs in a calendar month different from the month of purchase order issue, the contract unit prices approved for the month of delivery shall apply.

Contract price adjustments shall be determined and applied based on the approved SEIFSA indices for the calendar month in which delivery of the Items takes place, and not the calendar month in which the purchase order was issued.

g) Failure by the Tenderers/Suppliers to submit claims for CPA within the timeframes detailed above will result in the unit rates for the items concerned being determined by the CCT in accordance with the published SEIFSA indices. The CCT however reserves the right in such a case not to amend the unit rates for the item if it is not to the CCT's advantage.

h) Failure to submit such application within two working weeks of commencement of contract shall result in the tendered unit prices in C.4 Price Schedule being applied for orders placed during the first calendar month of the contract.

i) Application for CPA thereafter shall follow the process detailed above.

TABLE F.1 (B).1: SEIFSA BASE MATERIAL AND LABOUR PRICES

Where Tender prices are subject to adjustment the prices quoted shall be subject to price variation based upon the SEIFSA base prices or indices for materials and labour detailed below.

For the purposes of this tender the **base month** shall be the calendar month prior to the month of the closing date for tenders, and SEIFSA indices published in this month shall be used (see clause 7 above)

ITEM	DESCRIPTION	SEIFSA Table No:	Base Month Price / Index:
ALUMINIUM	99.70 Melting Ingot	R	
MILD STEEL	Squares & Rectangular Hollow Sections	EEX	
LABOUR			

TENDERER/SUPPLIER TO NOTE:

a) This Schedule is only applicable if the Tenderer/Supplier is the Manufacturer of the Goods

b) A Minimum of 10% of the tendered local South African price must remain fixed.

TABLE F.1 (B). (Cont'd): SEIFSA BASE MATERIAL AND LABOUR PRICES

Item No.	Particulars of Item in C.4 Pricing Schedule	Material								Labour	Fixed Portion of Tender Price **(Min 10%)** (%)
		The percentage contribution of the specific materials to the total price per item are as follows:-								Proportion of Item Price Attributed to Labour Cost (%)	
		Aluminium	Mild steel	Other: _____	Other: _____	Other: _____	Other: _____	Other: _____	Other: _____		
		Proportion of Item Price (%)	Proportion of Item Price (%)	Proportion of Item Price (%)	Proportion of Item Price (%)	Proportion of Item Price (%)	Proportion of Item Price (%)	Proportion of Item Price (%)	(mm)		
1											
2											
3											
4											
5											

F.1 (C) LOCAL SOUTH AFRICAN CONTENT - SUPPLIER/ MANUFACTURER PRICE LIST/QUOTATIONS

1. Tenderers /Suppliers that are not the manufacturer or original supplier of the tendered goods and whose tender prices are based on the price list/quotation of another company (manufacturer or other supplier) may apply Supplier / Manufacturer Pricelist / Quotation based CPA.

2. In such cases the Tenderer is required to submit with his tender a copy of the original Supplier / Manufacturer Pricelist / Quotation upon which his tender prices are based. Such pricelist / Quotation is required to be on the Letterhead of the Supplier / Manufacture, is to be dated, referenced and signed, and is to provide clear reference to the tender number and is required to clearly reference each item quoted to the respective Tender Item Number indicated in C.4 Price Schedule.

3. The tenderer shall further confirm the Manufacturer / supplier, Quotation date and reference number and applicable tender Items by completing Table F.1(C).1 below.

Table F.1(C).1: Price Schedule information for Manufacturers/Suppliers Price List(s)/Quotation

	Price List Information		
Manufacturer/ Supplier Name	**Price List/Quotation Date.**	**Price List/Quotation Reference Number**	**Pricelist applicable to Items as per C.4 Price Schedule**

4. During the contract period, the Tenderer (now Supplier) must submit the request for price adjustment based on increases in pricelists of manufacturers/suppliers prior to the effective date of the increase in the pricelist.
5. The effective date of any price adjustment granted will be the first day of the month following the month during which the fully substantiated application for contract price adjustment is submitted or, by agreement between the Tenderer/Supplier and the CCT, a subsequent date on which the price adjustment will become effective.

6. In instances where the Supplier's price adjustment claimed is less than entitled, the lesser price will be accepted.

7. Purchase orders placed prior to the effective date of any price increase shall be placed at the previously agreed price, not the claimed adjusted price.

8. Only the difference in source supplier / manufacturer pricelist (actual cost, not percentage) may be adjusted and under no circumstances may the Tenderer/Supplier increase their profit margin.

9. The Tenderer/Supplier shall, when submitting claims for contract price adjustment, submit all of the documentation indicated below a minimum of two weeks prior to the effective date of the contract price adjustment:

    a) Copies of price lists upon which original tender prices were based (refer to clause 2, Table F.1(C).1 above) clearly indicating the item(s) according to C.4 Price Schedule.

    b) The new price list (*from the same Supplier / Manufacturer as originally tendered)* on the relevant manufacturer/suppliers letterhead (with pamphlets, brochures and e-mail communication) clearly

indicating the item(s) according to C.4 Price Schedule.

c) Detailed calculations indicating how the “adjusted” price was calculated. The calculations must be submitted in Excel, together with a signed, “PDF” version of the Excel spreadsheet. The example below – Table F.1(C).2, is what is required.

d) A covering letter on the Supplier’s letterhead requesting the CPA with the effective date of the claim.

10. The CCT will consider the request and either refer the request back for correction or additional information or approve the request.

11. The CCT will assess such pricelist based CPA claims against market pricing and indices and other input pricing indicators and will only approve such claims that are confirmed to be reasonable and market related with reference to the source pricing information provided with the tender and with the CPA application

12. Approval of the CPA request including confirmation of the effective date, will be communicated to the Supplier in writing together with a list of the approved adjusted rates. The effective date will be as per clause 3 above.

13. In the event of a Supplier changing their Supplier / Manufacturer during the tenure of the contract, no request for price variations will be considered unless the Supplier has obtained prior approval from the City for the change of Supplier / Manufacturer. Such approval shall include technical approval by the Engineer of the goods supplied by the replacement Supplier / Manufacturer. Technical approval by the Engineer shall be a prerequisite for any change of Supplier / Manufacturer.

Table F.1(C).2 – Pro Forma Table for Adjustments in price where the Supplier is not the Manufacturer)

C.4 Price Schedule Item No.	Original Tender Price	Previous and New Price List Information					New Contract Price (Excl. VAT)
		Manufacturer/ Supplier	Material no.	Price as per previous Manufacturer/ Supplier Price List (Excl. Vat) Price List Date:_____	Price as per new Supplier/ Manufacturer Price List (Excl. Vat) Price List Date:_____	Difference between the previous and new manufacturer Price list (C)-(B)	
	(A)			(B)	(C)	(D)	(A)+(D)

**When submitting the first request for price adjustment, use the tender price as per C.4 Price Schedule.*

F.1 (D) LOCAL SOUTH AFRICAN CONTENT - STATS SA CONSUMER PRICE INDEX

1. Applicable where the Tenderer/Suppliers has indicated their tendered prices are subject to adjustment based on changes in the Statistics South Africa (STATS SA) Consumer Price Indices.

2. A minimum of 10% of the tender price as per C.4 Pricing Schedule shall be fixed and free of variation for the duration of the contract.

3. A total of 90% of the tender price as per C.4 Pricing Schedule shall be adjusted annually in accordance with clause 5 below.

4. The Contract Price(s) shall remain FIRM for the first 12 calendar months from date of Commencement Date of Contract and Suppliers are not permitted to requests CPA during this period.

5. The Contract Price(s) will thereafter be subject to adjustment annually based on the average percentage of change over 12 months as published by STATS SA: Consumer Price Index (P0141–Table B2 – CPI headline year-on-year rates) as follows:

   5.1 CPA applicable from the start of the 13th month to the end of the 24th month calculated as follows:
   - a) The base month for the price adjustment being three (3) calendar months prior to Commencement Date of Contract; and
   - b) The end month shall be three (3) calendar months prior to the 12th month.

   5.2 CPA applicable from the start of the 25th month to end of the 36th month calculated as follows:
   - a) The base month for the price adjustment shall be three (3) calendar months prior to the 13th month; and
   - b) The end month shall be three (3) calendar months prior to 24th month.

   5.3 The average CPI percentage will be calculated using the base month to the end month (both included) divided by the number of months. (12 months totalled/12 to achieve the average CPI)

6. 6 Subject to prior approval by the CCT delegated authority, in the event of any extension of the contract period, the CPA applicable beyond month 36th of the contract will follow the same principle in determining the base month (i.e. 3 calendar months prior to 25th month) and end date (3 calendar months prior to 36th month) as outlined above.

F.1. (E) LOCAL SOUTH AFRICAN CONTENT – SECTORIAL DETERMINATION

NOT APPLICABLE

F.1. (F) GOODS AND/OR COMPONENTS IMPORTED FROM OUTSIDE OF SOUTH AFRICA RATE OF EXCHANGE PRICE VARIATIONS

NOT APPLICABLE

F.1. (G) GOODS AND/OR COMPONENTS IMPORTED FROM OUTSIDE OF SOUTH AFRICA - MANUFACTURER/SUPPLIER PRICE/QUOTATION LIST

NOT APPLICABLE

F.1. (H) GOODS AND/OR COMPONENTS IMPORTED FROM OUTSIDE OF SOUTH AFRICA - BASED ON FOREIGN INDICES

1. Adjustment for variation in labour and material Costs based on Indices in the country of manufacture.

1.1 If the prices for imported Goods and/or components are not fixed, the Supplier shall in their Tender specify the formula for calculating Contract Price Adjustments normally used in the country of manufacture and the indices and relative proportions of labour and material on which his Tender prices are based. The imported goods and or components shall be adjusted annually in accordance with clause 18.2 below.

1.2 The FOB adjustment in this CPA must be read with the values stipulated in the F.1 (F) (Column A) Schedule for Rate of Exchange.

2. Formula(e) for FOB price adjustment on goods and/or components ex-import:

Cost of goods and or components manufactured outside of South Africa and any foreign installation labour (FOB values in Table 2 titled "**Price Basis for Imported Resources**" (column (A))) will be fixed and firm except for variations in the rate of exchange and statutory obligations unless the following information is provided:

P = Po(0,1 + 0,9N/No)
Where
P = Adjusted Price
Po = Original Price
10% - Fixed
And:

No	Foreign Published Index (similar to SEIFSA CPI/PPI) in country of Origin:
N	DETAIL: _____

3. The FOB values in Table 2 titled "**Price Basis for Imported Resources**" (column (A)), shall remain fixed and firm for the first 12 calendar months from date of Commencement Date of Contract and Suppliers are not permitted to requests CPA during this period.

4. The FOB values will thereafter be subject to adjustment annually based on the average percentage of 12 months as published in the Foreign Published Index as follows:

4.1 From the start of the 13th month to the end of the 24th month calculated as follows:
   a) The base month for the price adjustment being three (3) calendar months prior to Commencement Date of Contract; and
   b) The end month shall be three (3) calendar months prior to the 12th month.

4.2 From the start of the 25th month to end of the 36th month calculated as follows:
   a) The base month for the price adjustment shall be three (3) calendar months prior to the 13th month; and
   b) The end month shall be three (3) calendar months prior to 24th month.

5. The average percentage increase in the published index will be calculated using the base month to the end month (both included) divided by the number of months. (12 months totalled/12 to achieve the average for the Foreign Published Index)

Schedule F.2: Certificate of Authority for Partnerships/ Joint Ventures/ Consortiums

This schedule is to be completed if the tender is submitted by a partnership/joint venture/ consortium.

1. We, the undersigned, are submitting this tender offer as a partnership/ joint venture/ consortium and hereby authorize Mr/Ms _____, of the authorised entity _____, acting in the capacity of Lead Partner, to sign all documents in connection with the tender offer and any contract resulting from it on the partnership/joint venture/ consortium's behalf.

2. By signing this schedule the partners to the partnership/joint venture/ consortium:

   2.1 warrant that the tender submitted is in accordance with the main business and objectives of the partnership/joint venture/ consortium;

   2.2 agree that the CCT shall make all payments in terms of this Contract into the following bank account of the Lead Partner:

   Account Holder: _____
   Financial Institution: _____
   Branch Code: _____
   Account No.: _____

   2.3 agree that in the event that there is a change in the partnership/ joint venture/ consortium and/or should a dispute arise between the partnership/joint venture/ consortium partners, that the CCT shall continue to make any/all payments due and payable in terms of the Contract into the aforesaid bank account until such time as the CCT is presented with a Court Order or an original agreement (signed by each and every partner of the partnership/joint venture/ consortium) notifying the CCT of the details of the new bank account into which it is required to make payment.

   2.4 agree that they shall be jointly and severally liable to the CCT for the due and proper fulfilment by the successful tenderer/supplier of its obligations in terms of the Contract as well as any damages suffered by the CCT as a result of breach by the successful tenderer/supplier. The partnership/joint venture/ consortium partners hereby renounce the benefits of excussion and division.

SIGNED BY THE PARTNERS OF THE PARTNERSHIP/ JOINT VENTURE/ CONSORTIUM		
NAME OF FIRM	**ADDRESS**	**DULY AUTHORISED SIGNATORY**
Lead partner		Signature……... Name…… Designation……...
		Signature……... Name…… Designation……...
		Signature……... Name…… Designation……...
		Signature……... Name…… Designation……...

Note: A copy of the Joint Venture Agreement shall be appended to *List of Other Documents Attached by Tenderer Schedule.*

Schedule F.3: Declaration for Procurement above R10 million

If the value of the transaction is expected to exceed R10 million (VAT included) the tenderer shall complete the following questionnaire, attach the necessary documents and sign this schedule:

1. Are you by law required to prepare annual financial statements for auditing? (**Please mark with X**)

YES		NO	

If YES, submit audited annual financial statements:
(i) For the past three years, or
(ii) Since the date of establishment of the tenderer (if established during the past three years)
By attaching such audited financial statements to **List of Other Documents Attached by Tenderer Schedule.**

2. Do you have any outstanding undisputed commitments for municipal services towards the CCT or other municipality in respect of which payment is overdue for more than 30 (thirty) days? (**Please mark with X**)

YES		NO	

2.1 If NO, this serves to certify that the tenderer has no undisputed commitments for municipal services towards any municipality for more than three (3) (three) months in respect of which payment is overdue for more than 30 (thirty) days.
2.2 If YES, provide particulars:

3. Has any contract been awarded to you by an organ of state during the past five (5) years? (**Please mark with X**)

YES		NO	

If YES, insert particulars in the table below including particulars of any material non-compliance or dispute concerning the execution of such contract. Alternatively attach the particulars to **List of Other Documents Attached by Tenderer** schedule in the same format as the table below:

Organ of State	Contract Description	Contract Period	Non-compliance/dispute (if any)

4. Will any portion of the goods or services be sourced from outside the Republic, and if so, what portion and whether any portion of payment from the CCT is expected to be transferred out of the Republic? (**Please mark with X**)

YES		NO	

If YES, furnish particulars below

The tenderer hereby certifies that the information set out in this schedule and/or attached hereto is true and correct, and acknowledges that failure to properly and truthfully complete this schedule may result in steps being taken against the tenderer, the tender being disqualified, and/or (in the event that the tenderer is successful) the cancellation of the contract, restriction of the tenderer or the exercise by the CCT of any other remedies available to it.

_____ _____

Signature
Print name: Date
On behalf of the tenderer (duly authorised)

Schedule F.4: Preference Points Claim Form In Terms Of the Preferential Procurement Regulations 2022

1. GENERAL CONDITIONS

1.1 The following preference point systems are applicable to invitations to tender:

- the 80/20 system for requirements with a Rand value of up to R50 000 000 (all applicable taxes included); and
- the 90/10 system for requirements with a Rand value above R50 000 000 (all applicable taxes included).

1.2 **To be completed by the organ of state**

The applicable preference point system for this tender is the 80/20 preference point system.

1.3 Points for this tender (even in the case of a tender for income-generating contracts) shall be awarded for:

(a) Price; and
(b) Specific Goals.

1.4 **To be completed by the organ of state:**

The maximum points for this tender are allocated as follows:

	POINTS
PRICE	80
SPECIFIC GOALS	20
Total points for Price and SPECIFIC GOALS	**100**

1.5 Failure on the part of a tenderer to submit proof or documentation required in terms of this tender to claim points for specific goals with the tender, will be interpreted to mean that preference points for specific goals are not claimed.

1.6 The organ of state reserves the right to require of a tenderer, either before a tender is adjudicated or at any time subsequently, to substantiate any claim in regard to preferences, in any manner required by the organ of state.

2. DEFINITIONS

The following definitions shall apply to this schedule:

(a) "tender" means a written offer in the form determined by an organ of state in response to an invitation to provide goods or services through price quotations, competitive tendering process or any other method envisaged in legislation;
(b) "price" means an amount of money tendered for goods or services, and includes all applicable taxes less all unconditional discounts;
(c) "rand value" means the total estimated value of a contract in Rand, calculated at the time of bid invitation, and includes all applicable taxes;
(d) "tender for income-generating contracts" means a written offer in the form determined by an organ of state in response to an invitation for the origination of income-generating contracts through any method envisaged in legislation that will result in a legal agreement between the organ of state and a third party that produces revenue for the organ of state, and includes, but is not limited to, leasing and disposal of assets and concession contracts, excluding direct sales and disposal of assets through public auctions; and
(e) "The Act" means the Preferential Procurement Policy Framework Act, 2000 (Act No. 5 of 2000).

3. FORMULAE FOR PROCUREMENT OF GOODS AND SERVICES

POINTS AWARDED FOR PRICE

THE 80/20 OR 90/10 PREFERENCE POINT SYSTEMS

A maximum of 80 or 90 points is allocated for price on the following basis:

80/20 or 90/10

Or

Where

Ps = Points scored for price of tender under consideration
Pt = Price of tender under consideration
Pmin = Price of lowest acceptable tender

4. FORMULAE FOR DISPOSAL OR LEASING OF STATE ASSETS AND INCOME GENERATING PROCUREMENT

POINTS AWARDED FOR PRICE

A maximum of 80 or 90 points is allocated for price on the following basis:

80/20 or 90/10

Or

Where:

Ps = Points scored for price of tender under consideration
Pt = Price of tender under consideration
Pmax = Price of highest acceptable tender

5. POINTS AWARDED FOR SPECIFIC GOALS

5.1 In terms of Regulation 4(2); 5(2); 6(2) and 7(2) of the Preferential Procurement Regulations, preference points must be awarded for specific goals stated in the tender. For the purposes of this tender the tenderer will be allocated points based on the goals stated in table 1 below as may be supported by proof/ documentation stated in the conditions of this tender:

5.2 In cases where organs of state intend to use Regulation 3(2) of the Regulations, which states that, if it is unclear whether the 80/20 or 90/10 preference point system applies, an organ of state must, in the tender documents, stipulate in the case of—

(a) an invitation for tender for income-generating contracts, that either the 80/20 or 90/10 preference point system will apply and that the highest acceptable tender will be used to determine the applicable preference point system; or

(b) any other invitation for tender, that either the 80/20 or 90/10 preference point system will apply and that the lowest acceptable tender will be used to determine the applicable preference point system,

then the organ of state must indicate the points allocated for specific goals for both the 90/10 and 80/20 preference point system.

Table 1: Specific Goals (SG) – Points Allocated and Claimed

Tenderers must indicate the preference points claimed for each specific goal applicable to them, for the purposes of this tender.

(Note to organs of state: Where either the 90/10 or 80/20 preference point system is applicable, corresponding points must also be indicated as such.

The specific goals allocated points in terms of this tender	To be Completed by the Organ of State	To be Completed by the Tenderer
	Number of points Allocated (80/20 system)	Number of points claimed (80/20 system)
Promotion of Micro and Small Enterprises	8	
Enterprise Supplier Development and Socio-Economic Development	6	
Skills Development OR Employee Share Scheme	6	

DECLARATION WITH REGARD TO COMPANY/FIRM

5.3 Name of company/firm…….

5.4 Company registration number: ……...

5.5 TYPE OF COMPANY/ FIRM

- □ Partnership/Joint Venture / Consortium
- □ One-person business/sole propriety
- □ Close corporation
- □ Public Company
- □ Personal Liability Company
- □ (Pty) Limited
- □ Non-Profit Company
- □ State Owned Company

[Tick applicable box]

5.6 I, the undersigned, who is duly authorised to do so on behalf of the company/firm, certify that the points claimed, based on the specific goals as advised in the tender, qualifies the company/ firm for the preference(s) shown and I acknowledge that:

i) The information furnished is true and correct;

ii) The preference points claimed are in accordance with the General Conditions as indicated in paragraph 1 of this form;

iii) In the event of a contract being awarded as a result of points claimed as shown in paragraphs 4.1 and 4.2, the Supplier may be required to furnish documentary proof to the satisfaction of the organ of state that the claims are correct;

iv) If the specific goals have been claimed or obtained on a fraudulent basis or any of the conditions of contract have not been fulfilled, the organ of state may, in addition to any other remedy it may have –

(a) disqualify the person from the tendering process;

(b) recover costs, losses or damages it has incurred or suffered as a result of that person's conduct;

(c) cancel the contract and claim any damages which it has suffered as a result of having to make less favourable arrangements due to such cancellation;

(d) recommend that the tenderer or Supplier, its shareholders and directors, or only the shareholders and directors who acted on a fraudulent basis, be restricted from obtaining business from any organ of state for a period not exceeding 10 years, after the audi alteram partem (hear the other side) rule has been applied; and

(e) forward the matter for criminal prosecution, if deemed necessary.

Signature of Tenderer	*Date*	*Name and Surname*	*Address*

For official use.		
SIGNATURE OF CCT OFFICIALS AT TENDER OPENING		
1.	2.	3.

Table 2: Specific Goals – Declaration by the Tenderer

Tenderers must complete this table to declare the amounts and percentages applicable to the specific goals they are claiming.
NB: In completing Table 2 below, please consult **Notes for Verification** below

The specific goals allocated points in terms of this tender	To be Completed by the Tenderer	
	Refer to "Notes for verification"	**Amount Declared (excluding VAT)**
SG1 Promotion of Micro and Small Enterprises	(i) Total Turnover	
SG2 Enterprise Supplier Development and Socio Economic Development	(ii) Total Enterprise Supplier Development Expenditure	
	(iii) Total Socio Economic Development Expenditure	
	(iv) Total Expenditure	
SG3.1 Skills Development	(v) Total Skills Development Expenditure	
	(vi) Total Profit	
OR **SG3.2** Employee Share Scheme	(vii) Employee Share Scheme Ownership %	

Tenderer Confirmation:
I confirm that the amounts declared in Table 2 above are accurate and in accordance with the *'The Broad-Based Black Economic Empowerment (B-BBEE) Act 53 of 2003, as amended. .*

Signature of Tenderer (Authorised to represent the tenderer)	**Date**	**Name and Surname**	**Address**

Notes for Verification:

All amounts disclosed should be as per the most recent Annual Financial Statements (not older than 12 months) and defined as per the B-BBEE Act

- SG1 – Specific Goal 1
  Promotion of Micro and Small Enterprises
  (i) Total Turnover
  Micro enterprises with a turnover of up to R20million and Small enterprises with a turnover up to R80 million, as per National Small Enterprise Act, 1996 (Act No.102 of 1996)

- SG2 – Specific Goal 2
  Enterprise Supplier Development and Socio-Economic Development
  (ii) Total Enterprise Supplier Development Expenditure
  Qualifying expenditure as defined in the B-BBEE Act: Statement 400 “THE GENERAL PRINCIPLES FOR MEASURING ENTERPRISE AND SUPPLIER DEVELOPMENT"

  (iii) Total Enterprise Socio Economic Development Expenditure
  Qualifying expenditure as defined in the B-BBEE Act: Statement 500 “THE GENERAL PRINCIPLES FOR MEASURING THE SOCIO - ECONOMIC DEVELOPMENT ELEMENT"

  (iv) Total Expenditure
  Total Expenditure as per the most recent Annual Financial Statements (not older than 12 months)

- SG3.1 – Specific Goal 3
  Skills Development
  (v) Total Skills Development Expenditure
  Qualifying expenditure as defined in the B-BBEE Act: Statement 300 “THE GENERAL PRINCIPLES FOR MEASURING SKILLS DEVELOPMENT"

  (vi) Total Profit
  Total Profit as per the most recent Annual Financial Statements (not older than 12 months)

- SG3.2 – Specific Goal 3
  Employee Share Scheme
  (vii) Employee Share Scheme Ownership %
  Total employee ownership as per employee share certificate at the date of tender closing.

The below table (Table 3) must be completed by a B-BBEE Verification Agency (*Note 1) **OR** Commissioner of Oaths
(Refer to *Note 3.2 for the detailed declaration):

Table 3:

Signature and Stamp	**Date**	**Name and Surname**	**Address**

Note 1

1.1 Tendering entity that undergoes B-BBEE verification

- Where a tendering entity undergoes B-BBEE verification, a B-BBEE certificate valid as at the date of tender closing, must be attached to the bid submission or must be made available upon request within the specified period.
- All amounts disclosed in Table 2, should be amounts used in the B-BBEE verification process undergone by the tendering entity
- The B-BBEE verification agency must complete Table 3 above, to confirm the following amounts disclosed by the bidder in Table 2:
  (ii) Total Enterprise Supplier Development Expenditure;
  (iii) Total Socio Economic Development Expenditure;
  (v) Total Skills Development Expenditure

- Where the tendering entity is a Joint Venture/ Consortium, the amounts in Table 2 must be consolidated, with an accompanying consolidated B-BBEE certificate valid as at the date of tender closing must be attached to the bid submission or must be made available upon request within the specified period.

1.2 If the tendering entity does not undergo B-BBEE verification and qualifies as a B-BBEE Qualifying Small Enterprise (QSE) and Exempted Micro-Enterprises (EME)

- Table 3 must be completed by a Commissioner of Oaths to confirm the following amounts disclosed by the bidder in Table 2:
  (ii) Total Enterprise Supplier Development Expenditure;
  (iii) Total Socio Economic Development Expenditure;
  (v) Total Skills Development Expenditure

Note 2

2.1 The tendering entity must attach with the bid submission or must be made available upon request within the specified period; the most recent (where applicable) audited financial statements to enable validation of the following amounts disclosed by the bidder in Table 2:
  (i) Total Turnover
  (iv) Total Expenditure
  (vi) Total Profit

2.2 Companies who are required to be audited by legislation, must submit audited financial statements, not older than 12 months with the bid submission or must be made available upon request within the specified period.

Note 3

Sworn affidavit to be deposed by the Commissioner of Oaths to the QSE or EME.

I, the undersigned,

Full Name and Surname *(Authorised to represent the tenderer)*	
Identity Number	

Hereby declare under oath as follows

3.1 The contents of this statement are to the best of my knowledge a true reflection of facts.

3.2 I am a Member/ Director/ Owner of the following enterprise and am duly authorised to act on its behalf.

Enterprise Name:	
Trading Name (If Applicable):	
Registration Number:	
Enterprise Physical Address:	
Type of Entity (CC, Pty (Ltd), Sole Prop etc):	
Nature of Business:	

3.3 I hereby declare under oath that based on the Financial Statements / Management Accounts and information available on the latest financial year end _____

3.3.1 The annual Total Revenue was less than R50 000 000.00 (Fifty Million Rand);

3.3.2 The following amounts disclosed in Table 2 are accurate, complete, consistent with the BBBEE Act (see Notes for Verification) and based on the Financial Statements / Management Accounts and information available on the latest financial year end _____

As per Table 2	Amount Declared (excluding VAT)
(ii) Total Enterprise Supplier Development Expenditure	
(iii) Total Socio Economic Development Expenditure	
(iv) Total Expenditure	
(v) Total Skills Development Expenditure	

As per Table 2	Amount Declared (excluding VAT)
(vi) Total Profit	
(vii) Employee Share Scheme Ownership %	

3.4 I know and understand the contents of this affidavit and I have no objection to take the prescribed oath and consider the oath binding on my conscience and on the owners of the enterprise which I represent I this matter.

3.5 The sworn affidavit will be valid for a period of 12 months from the date signed by the commissioner.

Commissioner of Oaths
Signature, Date and Stamp

Deponent Signature and Date

3.6 KEY NOTES OF DETERMINING VALIDITY OF SWORN AFFIDAVITS

BBBEE Certificates/ Sworn Affidavits	Returnable for declaration requirement must be attached with the bid submission or must be made available upon request within the specified period - Certified and Valid copy of BBBEE Certificate issued by a SANAS Accredited Verification Agent, or - Certified and Valid copy of Sworn Affidavit for either EME or QSE (see key notes below to determine Validity of a Sworn Affidavit); or - Valid copy of BBBEE Certificate issued by CIPC for EME's only **KEY NOTES OF DETERMINING VALIDITY OF SWORN AFFIDAVITS** **Tenderers submitting Sworn Affidavits must ensure that the affidavits meet the following key pointers to ensure their validity:** (a) Name/s of deponent as they appear in the identity document and the identity number. (b) Designation of the deponent as the Director/ Member must be indicated in order to know that person is duly authorised to depose of an affidavit **(mark the applicable**

	option). (c) Name of enterprise as per enterprise registration documents issued by CIPC, where applicable, and enterprise business address. (d) Amounts as per Table 2 must be inserted **(No blank spaces to be left).** (e) Indicate total revenue for the year under review and whether it is based on audited financial statements or management accounts **(mark the applicable option).** (f) Financial year end as per the enterprise's registration documents, which was used to determine the total revenue (financial year end to be stipulated by day/ month/ year). (g) Date deponent signed and date of Commissioner of Oath must be the same. (The sworn affidavit must be signed in the presence of the Commissioner of Oath. Furthermore the Commissioner must also sign ad stamp). (h) Commissioner of Oath cannot be an employee or ex officio of the enterprise because, a person cannot by law, commission a sworn affidavit in which they have an interest. If the relevant documentation/ information as stipulated in the enquiry is not submitted and/or does not meet the above requirements; tenderers will be disqualified.

Schedule F.5: Declaration of Interest – State Employees (MBD 4 amended)

1. No bid will be accepted from:
   1.1 persons in the service of the state[1], or
   1.2 if the person is not a natural person, of which any director, manager or principal shareholder or stakeholder is in the service of the state, or
   1.3 from persons, or entities of which any director, manager or principal shareholder or stakeholder, has been in the service of the City of Cape Town (CCT) during the previous twelve (12) months, or
   1.4 from an entity who has employed a former CCT employee who was at a level of T14 of higher at the time of leaving the CCT's employ and involved in any of the CCT's bid committees for the bid submitted, if:
      1.4.1 the CCT employee left the CCT's employment voluntarily, during the previous twelve (12) months;
   1.5 a person who was a CCT employee, or an entity that employs a CCT employee, if
      1.5.1 the CCT employee left the CCT's employment whilst under investigation for alleged misconduct, or
      1.5.2 was facing disciplinary action or potential disciplinary action by the CCT, or
      1.5.3 was involved in a dispute against the CCT during the previous thirty six (36) months.

2. Any person, having a kinship with persons in the service of the state, including a blood relationship, may make an offer or offers in terms of this invitation to bid. In view of possible allegations of favouritism, should the resulting bid, or part thereof, be awarded to persons connected with or related to persons in service of the state, it is required that the tenderer or their authorised representative declare their position in relation to the evaluating/adjudicating authority.

3. In order to give effect to the above, the following questionnaire must be completed and submitted with the bid.

   3.1 Full Name of tenderer or his or her representative: _____

   3.2 Identity Number: _____

   3.3 Position occupied in the Company (director, trustee, shareholder[2]): _____

   3.4 Company or Close Corporation Registration Number: _____

   3.5 Tax Reference Number: _____

   3.6 VAT Registration Number: _____

   3.7 The names of all directors / trustees / shareholders members, their individual identity numbers and state employee numbers must be indicated in paragraph 4 below.

   3.8 Are you presently in the service of the state? **YES / NO**
      3.8.1 If yes, furnish particulars: _____

   3.9 Have you been in the service of the state for the past twelve months? **YES / NO**
      3.9.1 If yes, furnish particulars: _____

   3.10 Do you have any relationship (family, friend, other) with persons in the service of the state and who may be involved with the evaluation and or adjudication of this bid? **YES / NO**
      3.10.1 If yes, furnish particulars: _____

   3.11 Are you, aware of any relationship (family, friend, other) between any other tenderer and any persons in the service of the state who may be involved with the evaluation and or adjudication of this bid? **YES / NO**
      3.11.1 If yes, furnish particulars: _____

   3.12 Are any of the company's directors, trustees, managers, principle shareholders or stakeholders in service of the state? **YES / NO**
      3.12.1 If yes, furnish particulars: _____

3.13 Are any spouse, child or parent of the company's directors, trustees, managers, principle shareholders or stakeholders in service of the state? **YES / NO**
3.13.1 If yes, furnish particulars: _____

3.14 Do you or any of the directors, trustees, managers, principle shareholders, or stakeholders of this company have any interest in any other related companies or business whether or not they are bidding for this contract? **YES / NO**
3.14.1 If yes, furnish particulars: _____

3.15 Have you, or any of the directors, trustees, managers, principle shareholders, or stakeholders of this company been in the service of the CCT in the past twelve months? **YES / NO**
3.15.1 If yes, furnish particulars: _____

3.16 Do you have any employees who was in the service of the CCT at a level of T14 or higher at the time they left the employ of the CCT, and who was involved in any of the CCT's bid committees for this bid? **YES / NO**
3.16.1 If yes, furnish particulars: _____

4. Full details of directors / trustees / members / shareholders

Full Name	Identity Number	State Employee Number

If the above table does not sufficient to provide the details of all directors / trustees / shareholders, please append full details to the tender submission.

The tenderer hereby certifies that the information set out in this schedule and/or attached hereto is true and correct, and acknowledges that failure to properly and truthfully complete this schedule may result in steps being taken against the tenderer, the tender being disqualified, and/or (in the event that the tenderer is successful) the cancellation of the contract, restriction of the tenderer or the exercise by the CCT of any other remedies available to it.

_____ _____

Signature Date
Print name:
On behalf of the tenderer (duly authorised)

[1]MSCM Regulations: "in the service of the state" means to be –

(a) a member of –
(i) any municipal council;
(ii) any provincial legislature; or
(iii) the national Assembly or the national Council of provinces;

(b) a member of the board of directors of any municipal entity;
(c) an official of any municipality or municipal entity;
(d) an employee of any national or provincial department, national or provincial public entity or constitutional institution within the meaning of the Public Finance Management Act, 1999 (Act No.1 of 1999);
(e) an executive member of the accounting authority of any national or provincial public entity; or
(f) an employee of Parliament or a provincial legislature.

[2] Shareholder" means a person who owns shares in the company and is actively involved in the management of the company or business and exercises control over the company.

Schedule F.6: Conflict of Interest Declaration

1. The tenderer shall declare whether it has any conflict of interest in the transaction for which the tender is submitted. (**Please mark with X**)

YES		NO	

1.1 If yes, the tenderer is required to set out the particulars in the table below:

2. The tenderer shall declare whether it has directly or through a representative or intermediary promised, offered or granted:

2.1 Any inducement or reward to the CCT for or in connection with the award of this contract; or

2.2 Any reward, gift, favour or hospitality to any official or any other role player involved in the implementation of the supply chain management policy. (**Please mark with X**)

YES		NO	

If yes, the tenderer is required to set out the particulars in the table below:

Should the tenderer be aware of any corrupt or fraudulent transactions relating to the procurement process of the CCT, please contact the following:

The CCT's anti-corruption hotline at 0800 32 31 30 (toll free)

The tenderer hereby certifies that the information set out in this schedule and/or attached hereto is true and correct, and acknowledges that failure to properly and truthfully complete this schedule may result in steps being taken against the tenderer, the tender being disqualified, and/or (in the event that the tenderer is successful) the cancellation of the contract, restriction of the tenderer or the exercise by the CCT of any other remedies available to it.

_____ _____

Signature
Print name:
On behalf of the tenderer (duly authorised)

Date

Schedule F.7: Declaration of Tenderer's Past Supply Chain Management Practices (MBD 8)

Where the entity tendering is a partnership/joint venture/consortium, each party to the partnership/joint venture/consortium must sign a declaration in terms of the Municipal Finance Management Act, Act 56 0f 2003, and attach it to this schedule.

1 The tender offer of any tenderer may be rejected if that tenderer or any of its directors/members have:

a) abused the municipality's / municipal entity's supply chain management system or committed any fraudulent conduct in relation to such system;
b) been convicted for fraud or corruption during the past five years;
c) willfully neglected, reneged on or failed to comply with any government, municipal or other public sector contract during the past five years; or
d) been listed in the Register for Tender Defaulters in terms of section 29 of the Prevention and Combating of Corrupt Activities Act (No 12 of 2004) or Database of Restricted Suppliers.

2 In order to give effect to the above, the following questionnaire must be completed and submitted with the bid.

Item	Question	Yes	No
2.1	**Is the tenderer or any of its directors/members listed on the National Treasury's Database of Restricted Suppliers as companies or persons prohibited from doing business with the public sector?** (Companies or persons who are listed on this Database were informed in writing of this restriction by the Accounting Officer/Authority of the institution that imposed the restriction after the *audi alteram partem* rule was applied). **The Database of Restricted Suppliers now resides on the National Treasury's website (www.treasury.gov.za) and can be accessed by clicking on its link at the bottom of the home page.**	Yes ☐	No ☐
2.1.1	If so, furnish particulars:		
2.2	Is the tenderer or any of its directors/members listed on the Register for Tender Defaulters in terms of section 29 of the Prevention and Combating of Corrupt Activities Act (No 12 of 2004) or Database of Restricted Suppliers? **The Register for Tender Defaulters can be accessed on the National Treasury's website (www.treasury.gov.za) by clicking on its link at the bottom of the home page.**	Yes ☐	No ☐
2.2.1	If so, furnish particulars:		
2.3	Was the tenderer or any of its directors/members convicted by a court of law (including a court of law outside the Republic of South Africa) for fraud or corruption during the past five years?	Yes ☐	No ☐
2.3.1	If so, furnish particulars:		
Item	Question	Yes	No

2.4	Does the tenderer or any of its directors owe any municipal rates and taxes or municipal charges to the municipality / municipal entity, or to any other municipality / municipal entity, that is in arrears for more than three months?	Yes ☐	No ☐
2.4.1	If so, furnish particulars:		
2.5	Was any contract between the tenderer and the municipality / municipal entity or any other organ of state terminated during the past five years on account of failure to perform on or comply with the contract?	Yes ☐	No ☐
2.5.1	If so, furnish particulars:		

The tenderer hereby certifies that the information set out in this schedule and/or attached hereto is true and correct, and acknowledges that failure to properly and truthfully complete this schedule may result in steps being taken against the tenderer, the tender being disqualified, and/or (in the event that the tenderer is successful) the cancellation of the contract,, restriction of the tenderer or the exercise by the CCT of any other remedies available to it.

_____ _____

Signature
Print name:
On behalf of the tenderer (duly authorised)

Date

Schedule F.8: Authorisation for the Deduction of Outstanding Amounts Owed to the CCT

To: THE CITY MANAGER, City of Cape Town

From: _____
(Name of tenderer)

RE: AUTHORISATION FOR THE DEDUCTION OF OUTSTANDING AMOUNTS OWED TO THE CCT

The tenderer:

a) hereby acknowledges that according to SCM Regulation 38(1)(d)(i) the City Manager may reject the tender of the tenderer if any municipal rates and taxes or municipal service charges owed by the tenderer (or any of its directors/members/partners) to the CCT, or to any other municipality or municipal entity, are in arrears for more than 3 (three) months; and
b) therefore hereby agrees and authorises the CCT to deduct the full amount outstanding by the Tenderer or any of its directors/members/partners from any payment due to the tenderer; and
c) confirms the information as set out in the tables below for the purpose of giving effect to b) above;

Physical Business address(es) of the tenderer	Municipal Account number(s)	Inside the CCT municipal boundary (Yes/No)

If there is not enough space for all the names, please attach the information to **List of other documents attached by tenderer** schedule in the same format:

Name of Director / Member / Partner	Identity Number	Physical residential address of Director / Member / Partner	Municipal Account number(s)	Inside the CCT municipal boundary (Yes/No)

The tenderer hereby certifies that the information set out in this schedule and/or attached hereto is true and correct, and acknowledges that failure to properly and truthfully complete this schedule may result in steps being taken against the tenderer, the tender being disqualified, and/or (in the event that the tenderer is successful) the cancellation of the contract, restriction of the tenderer or the exercise by the CCT of any other remedies available to it.

_____ _____

Signature
Print name:
On behalf of the tenderer (duly authorised)

Date

Schedule F.9: Certificate of Independent Tender Determination

I, the undersigned, in submitting this tender number **31G/2026/27** and tender description: **THE SUPPLY, INSTALLATION AND REPAIR OF ALUMINIUM SWOPPABLE BODIES, CANOPIES AND STORAGE COMPARTMENTS IN CITY OF CAPE TOWN VEHICLES** in response to the tender invitation made by THE CCT, do hereby make the following statements, which I certify to be true and complete in every respect:

I certify, on behalf of: _____ (Name of tenderer) that:

1. I have read and I understand the contents of this Certificate;

2. I understand that this tender will be disqualified if this Certificate is found not to be true and complete in every respect;

3. I am authorised by the tenderer to sign this Certificate, and to submit this tender, on behalf of the tenderer;

4. Each person whose signature appears on this tender has been authorised by the tenderer to determine the terms of, and to sign, the tender on behalf of the tenderer;

5. For the purposes of this Certificate and this tender, I understand that the word 'competitor' shall include any individual or organisation other than the tenderer, whether or not affiliated with the tenderer, who:
   (a) has been requested to submit a tender in response to this tender invitation;
   (b) could potentially submit a tender in response to this tender invitation, based on their qualifications, abilities or experience; and
   (c) provides the same goods and services as the tenderer and/or is in the same line of business as the tenderer.

6. The tenderer has arrived at this tender independently from and without consultation, communication, agreement or arrangement with any competitor. However, communication between partners in a joint venture or consortium[1] will not be construed as collusive price quoting.

7. In particular, without limiting the generality of paragraphs 5 and 6 above, there has been no consultation, communication, agreement or arrangement with any competitor regarding:
   (a) prices;
   (b) geographical area where product or service will be rendered (market allocation);
   (c) methods, factors or formulas used to calculate prices;
   (d) the intention or decision to submit or not to submit a tender;
   (e) the submission of a tender which does not meet the specifications and conditions of the tender; or
   (f) tendering with the intention not to win the contract.

8. In addition, there have been no consultations, communications, agreements or arrangements with any competitor regarding the quality, quantity, specifications and conditions or delivery particulars of the products or services to which this tender invitation relates.

9. The terms of this tender have not been and will not be disclosed by the tenderer, directly or indirectly, to any competitor, prior to the date and time of the official tender opening or of the awarding of the contract.

10. I am aware that, in addition and without prejudice to any other remedy provided to combat any restrictive practices related to tenders and contracts, tenders that are suspicious will be reported to the Competition Commission for investigation and possible imposition of administrative penalties in terms of section 59 of the Competition Act, Act 89 of 1998, and/o/r may be reported to the National Prosecuting Authority (NPA) for criminal investigation, and/or may be restricted from conducting business with the public sector for a period not exceeding 10 (ten) years in terms of the Prevention and Combating of Corrupt Activities Act, Act 12 of 2004, or any other applicable legislation.

_____ _____

Signature
Print name: Date
On behalf of the tenderer (duly authorised)

([1] Consortium: Joint venture or Consortium means an association of persons for the purpose of combining their expertise, property, capital, efforts, skill and knowledge in an activity for the execution of a contract.)

Schedule F.10: Proposed Deviations And Qualifications By Tenderer

The Tenderer should record any **proposed** deviations or qualifications they may wish to make to the tender documents in this Returnable Schedule. Alternatively, a tenderer may state such proposed deviations and qualifications in a covering letter attached to his tender and reference such letter in this schedule. Any proposed deviations or qualifications contained in a covering letter which is not referenced in this schedule will not be considered.

The Tenderer's attention is drawn to clause 2.3.7.2 of the Standard Conditions of Tender referenced in the Tender Data regarding the CCT's handling of material deviations and qualifications.

If no deviations or qualifications are proposed, the schedule hereunder is to be marked NIL and signed by the Tenderer.

PAGE	CLAUSE OR ITEM	PROPOSED DEVIATION OR QUALIFICATION

List relevant documentation attached in Schedule F.10 below.

_____ _____

Signature
Print name:
On behalf of the tenderer (duly authorised)

Date

Schedule F.11: List of Other Documents Attached By Tenderer

The tenderer has attached to this schedule, the following additional documentation:		
	Date of Document	**Title of Document or Description (refer to clauses / schedules of this tender document where applicable)**
1.		
2.		
3.		
4.		
5.		
6.		
7.		
8.		
9.		
10.		
11.		
12.		
13.		
14.		
15.		
16.		
17.		

Attach additional pages if more space is required.

_____ _____

Signature
Print name:
On behalf of the tenderer (duly authorised)

Date

Schedule F.12: Record of Addenda to Tender Documents

We confirm that the following communications received from the CCT before the submission of this tender offer, amending the tender documents, have been taken into account in this tender offer:

	Date	Title or Details
1.		
2.		
3.		
4.		
5.		
6.		
7.		
8.		
9.		
10.		

Attach additional pages if more space is required.

_____ _____

Signature
Print name:
On behalf of the tenderer (duly authorised)

Date

Schedule F.13: Information to Be Provided With the Tender

1. **Body Builder certificate called "Certificate of Registration for Manufacturer/Importer/Builder" is to be supplied with submission at the time of tender closing. Failure to comply will result in the tender being non responsive.**

2. **Submit all technical drawings with all relevant dimensions for all items except items 1.9, 1.10 and 1.11 in category 1 and item 2.5 in category 2 as per the pricing schedule. OEM brochures, technical drawings etc. must be in the English language and properly assembled in an appropriate lever arch file/document holder/binder with clear labels indicating the various sections. Tenderers shall ensure that all relevant information has been submitted with the tender offer, or within the stipulated days of being requested to do so.**

3. **Submit and fully complete Schedule 13A – Technical detail. Tenderers shall ensure that all relevant information has been submitted with the tender offer, or within the stipulated days of being requested to do so.**

_____ _____

Signature
Print name:
On behalf of the tenderer (duly authorised)

Date

Schedule F.13A: Technical Detail

CATEGORY 1: VARIOUS ALUMINIUM STORAGE COMPARTMENTS

The tenderer is to indicate here the equipment offered which will satisfy the technical specifications as listed below. All items offered in the Price Schedule above are to be manufactured from aluminium with supply and fitment prices tendered separately.

1.1. 7 drawer with flip up lid

Unit offered – Make		…….
Dimensions (see clause 4.3) -	Width: 1030 – 1040 mm	
	Depth: 440 – 460 mm	……W……D …….H
	Height: 525 – 560 mm	
Total Mass		……Kg

1.2. 8 drawer 2 compartment

Unit offered – Make		…….
Dimensions (see clause 5.3) -	Width: 1030 – 1040 mm	
	Depth: 480 – 500 mm	……W……D …….H
	Height: 840 – 860 mm	
Total Mass		……Kg

1.3. 5 drawer with hinged flip up lid

Unit offered – Make		…….
Dimensions (see clause 6.2) -	Width: 680 – 700 mm	
	Depth: 450 – 465 mm	……W……D …….H
	Height: 540 – 550 mm	
Total Mass		…… Kg

1.4. Aluminium chest toolbox

Unit offered – Make	…….
Aluminium Toolbox 2000 x 600 x 500mm Mass	……Kg
Aluminium Toolbox 1500 x 600 x 500mm Mass	……Kg
Aluminium Toolbox 1300 x 600 x 500mm Mass	……Kg

1.5. Link stick Holder

Link stick holder 130 x 130 x 2000mm	……Kg
Link stick holder 200 x 130 x 2000mm	……Kg

13. SPARES

13.1. The tenderer must ensure that essential spares are available ex stock in Cape Town,South Africa. State geographical location of spares outlets.

……
……
……

13.2. List of accredited agencies for spares.

……
……
……

14. FITMENT AND REPAIR WORKSHOP (for information purposes only)

14.1. The fitment and repair workshop utilized for the duration of this contract must be situated as per clause 36 (including sub clauses) of the special conditions of contract.

14.2. State geographical location of the fitment and repair workshop

……

……

14.3. Should the tenderer be sub-contracting the fitment and repairs of all the items tendered for, a contractual agreement between the two parties should be submitted. Is there a sub contracting agreement in place? (please circle appropriote answers)
Yes / No
If yes, has the sub-contracting agreement been included with the submission? ……..Yes / No

14.4. The tenderer is to take full responsibility of all work performed by the subcontractor. The City of Cape Town must be notified with the necessary documentation of any changes to the agreement or subcontractors being utilized.

Schedule F.13A: Technical Detail

CATEGORY 2: VARIOUS ALUMINIUM SWOP BODY SUBFRAMES, CANOPIES AND ACCESSORIES

2.1. COMPARATIVE EVALUATION TABLE

Tables below will be used for comparative evaluation purposes and must be completed by the tenderer. The masses provided in the tables below are based on typical vehicles used operationally in conjunction with benchmarked fuel and passenger masses etc.Please fill in the masses of the products offered in the spaces provided

2.1.3. One (1) Ton LWB LDV GVM UNLADEN

	3100	**kg**
Chassis cab tare with load box removed (x)	1785	kg
Aluminium Panel Swop Body complete (y)	……kg	
Total unladen (x+y=A)	……kg	
Driver plus 2 passengers (@75Kg per person)	225	kg
Fuel	80	kg
Aluminium Panel Swop Body payload (Toolboxes, spares, etc) of 350kg	350	kg
Total Payload (B)	**655**	**kg**
Total mass of laden vehicle (A + B)	……kg	

	FRONT AXLE	**REAR AXLE**
Mass distribution (A + B) over front and rear axle	……kg	……kg
	FRONT AXLE	**REAR AXLE**

2.1.2. 2.5 Ton Double Cab truck 4x2 GVM UNLADEN

	5200	**kg**
Chassis cab tare	2280	kg
Aluminium Panel Swop body complete fitted (not greater than 850 kg)	……kg	
Total unlade (A)	……kg	
Driver plus 5 passengers (@75kg per person)	450	kg
Fuel	80	kg
Aluminium Panel Swop body payload (Toolboxes, spares, etc.) of 450kg	450	kg
Total Payload (B)	**980**	**kg**
Total mass of laden vehicle (A + B)	……kg	

	FRONT AXLE	**REAR AXLE**
GA1 / GA2	2900 kg	5000 kg
Mass distribution(A + B) over front and rear axle	……kg	……kg

Schedule F.14: Appeal Application

OFFICIAL RECEIPT
(Valid only if printed by official cash receipting machine)

IRISITI ESESIKWENI
(Isemthethweni kuphela xa ishicilelwe ngumatshini wokukhupa irisiti osesikweni.)

AMPTELIKE KWITANSIE
(Geldig alleenlik indien deur amptelike kontantvangs masjien gedruk.)

GL DATA CAPTURE RECEIPT
(CASHIER TO RETAIN A COPY)

RECEIPT NO: _____

DATE: _____

SAP GL:

8	1	0	1	0	0

PROFIT CENTRE:

1	3	0	5	0	0	0	1

NAME/COMPANY NAME:

AMOUNT:

						R	3	0	0	-	0	0

SERVICE DEPARTMENT DETAILS-

DEPARTMENT: LEGAL SERVICES; APPEALS UNIT

EMAIL; MSA.Appeals@capetown.gov.za

CIVIC CENTRE IZIKO LOLUNTU BURGERSENTRUM
12 HERTZOG BOULEVARD CAPE TOWN 8001 P O BOX 298 CAPE TOWN 8000
www.capetown.gov.za

Making progress possible. Together.