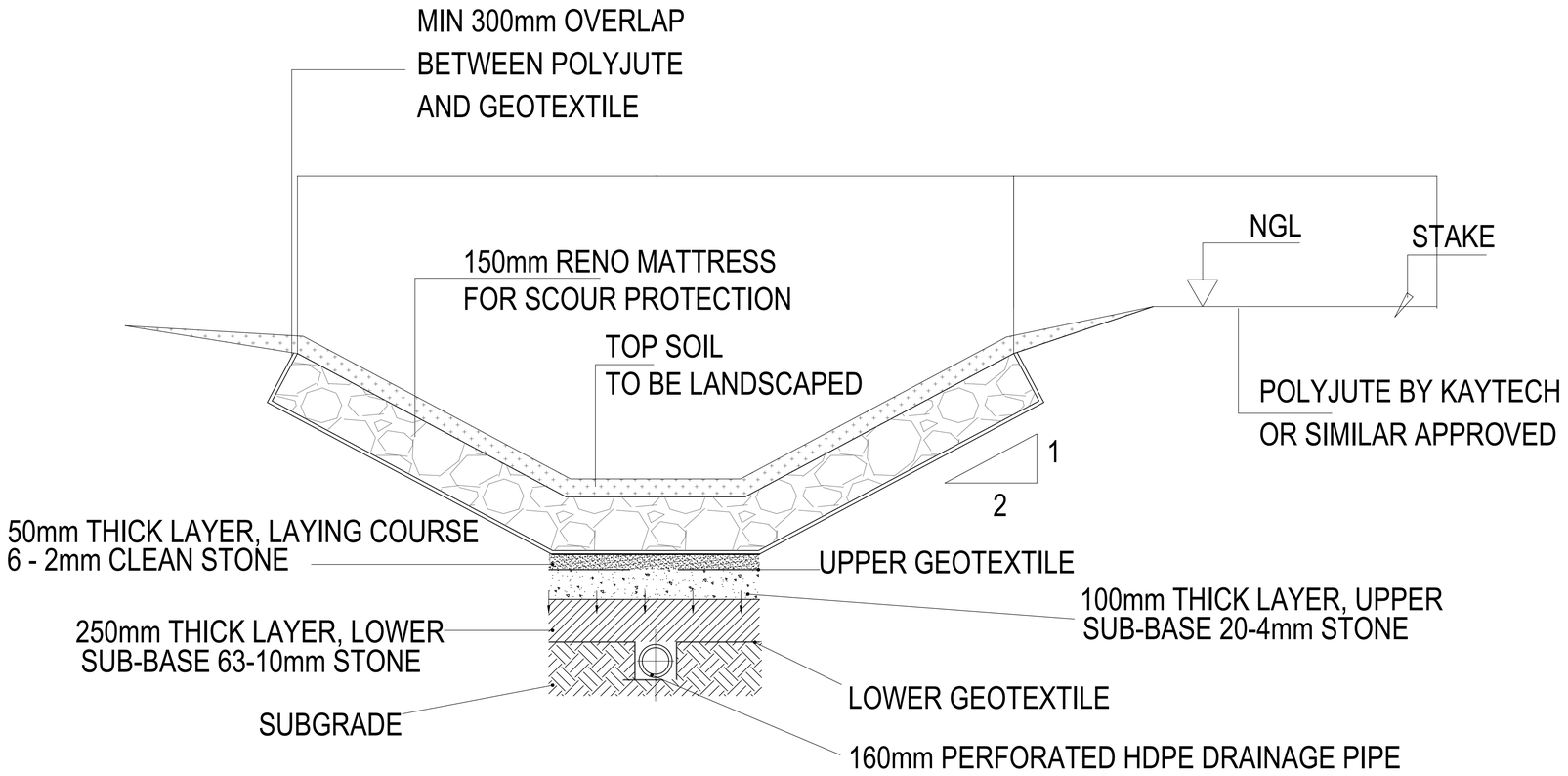

TYPICAL CROSS–SECTION THROUGH
BIO–SWALE DRAINAGE SYSTEM
SCALE 1:10

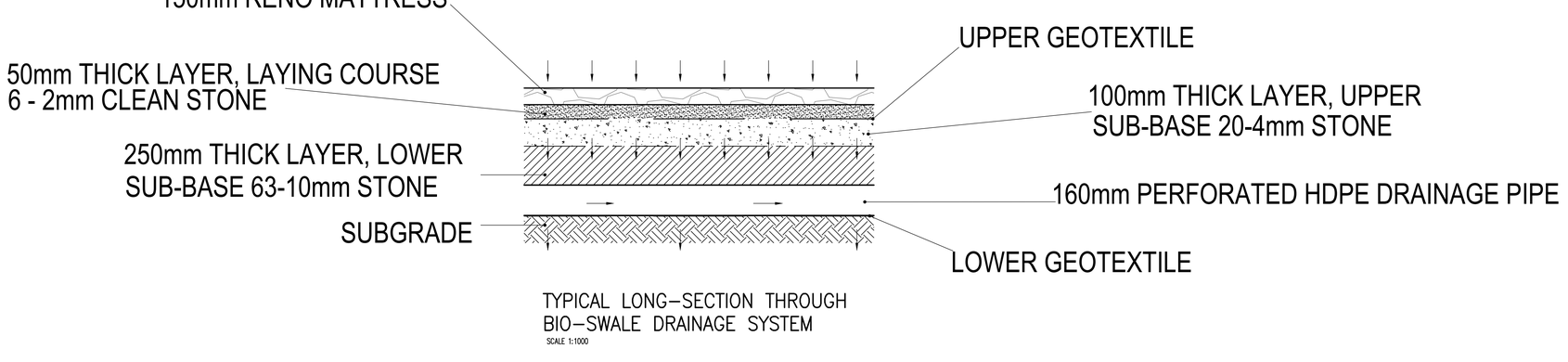

TYPICAL LONG–SECTION THROUGH
BIO–SWALE DRAINAGE SYSTEM
SCALE 1:1000

IF IN DOUBT ASK

NOTES AND SPECIFICATIONS

GENERAL

1. ALL MATERIAL AND WORKMANSHIP MUST COMPLY WITH THE REQUIREMENTS OF THE LATEST RELEVANT SABS REQUIREMENTS.
2. ALL DIMENSIONS ARE IN MILLIMETERS (UNLESS OTHERWISE SPECIFIED).
3. DO NOT SCALE FROM THIS DRAWING.
4. ALL DIMENSIONS MUST BE CHECKED AND APPROVED ON SITE.
5. ALL CONSTRUCTION TO BE DONE IN ACCORDANCE WITH THE STANDARD SPECIFICATIONS FOR MUNICIPAL CIVIL ENGINEERING WORKS.
6. THIS DRAWING MUST BE READ IN CONJUNCTION WITH THE ARCHITECT DRAWING (IF APPLICABLE).
7. THE CONSULTANT REMAINS RESPONSIBLE TO ENSURE THAT ALL THE GUIDELINES, STANDARD DRAWINGS, STANDARDS AND SPECIFICATIONS OF THE WATER AND SANITATION DEPARTMENT OF THE CITY OF TSHWANE ARE COMPLIED WITH.
8. FINAL POSITION OF SERVICES TO BE DETERMINED ON SITE.

NOTES

1. ALL IMPORTED FILL TO CLASSIFY AS G7 OR BETTER.
2. ALL LEVELS SHOWN ARE BULK EARTHWORKS LEVELS UNLESS OTHERWISE AGREED.
3. BATTER SLOPES TO BE 2:1 UNLESS OTHERWISE AGREED
4. ALL FILL TO BE COMPACTED TO MINIMUM 93% MOD AASHTO UNLESS OTHERWISE NOTED.
5. SETTING OUT DIMENSIONS TO BE CONFIRMED ON SITE.
6. CONTRACTOR TO ENSURE THAT ALL SITE ACTIVITIES ARE IN ACCORDANCE WITH OSH ACT. 1993 CONSTRUCTION REGULATIONS 2003.
7. ALL WORKS TO COMPLY WITH THE REQUIREMENTS OF SABS 1200D.
8. ACCURACY OF WORK TO COMPLY WITH SABS 1200D DEGREE OF ACCURACY Ⅱ.
9. TESTING
   a) ONE MODIFIED AASHTO MAXIMUM DENSITY DETERMINATION TO BE CARRIED OUT FOR EACH SET OF TESTS ON HOMOGENEOUS MATERIAL
   b) SETS OF DENSITY TEST TO COMPRISE:
      ORDINARY FILL / SUBGRADE 4 TESTS PER 2000m²
      SELECTED LAYERS 4 TESTS PER 1500m²
      SUB - BASE 4 TESTS PER 1000m²
   c) ACCEPTANCE CRITERIA REFER TO TABLE 2 SABS 1200DM
10. NOTE EXISTING PAVING BLOCKS TO BE REMOVED AND BASE MATERIAL TO BE RIPPED AND RECOMPACTED TO 95% MOD. AASHTO

LEGEND

AMENDMENTS

ALPHABETICAL LETTERS (A,B,C...) - FOR INFORMATION ONLY.
NUMERIC NUMBERS (1,2,3...) - FOR CONSTRUCTION

No.	DATE	ISSUED BY	DESCRIPTION
0	09/10/2026	S.M	ISSUED FOR INFORMATION

ASSOCIATED DRAWINGS

DRAWING NUMBER	DRAWING TITLE

CLIENT

SANBI
Biodiversity for Life
South African National Biodiversity Institute

2 CUSSONIA AVENUE
BRUMMERIA
PRETORIA
0001
TEL: +27 12 843 5000
FAX: +27 12 804 3211
Website: www.sanbi.org

CONSULTANT

TRIVIRON
INFRASTRUCTURE

TRIVIRON HOUSE
WHITBY MANOR OFFICE ESTATE
167 14th ROAD
NOORDWYK
MIDRAND, 1687
TEL: +27 11 318 8393
FAX: +27 86 677 8643
E-mail: pmadmin@triviron.co.za

PROJECT TITLE :

THOHOYANDOU BOTANICAL GARDEN

DRAWING TITLE

SUBSOIL DRAINAGE TYPICAL DETAIL

ENGINEER (CONSULTANT)

INITIALS AND SURNAME	SIGNATURE	Pr. Reg No.	DATE
			09/10/2026

CLIENT REPRESENTATIVE

INITIALS AND SURNAME	SIGNATURE	DESIGNATION	DATE
			09/10/2026

DESIGNED	DESIGN APPROVED	DRAWN	DRAWING CHECKED
S.M	A.B	S.M	A.B

DATE	SHEET NUMBER	SCALE
09/10/2026	SHEET 1 OF 1	1:1000

ISSUED FOR	PROJECT NUMBER	PAPER SIZE
INFORMATION	TPM006-2026	A1

DRAWING NUMBER	REVISION
TPM006-2026-SW01	0

\\Tsknvfw\Triviron Serv 2018\TRIVIRON HOLDINGS - 2018\TPM - Civil and Structural Engineering\TPM26005 - SANBI\5. Project Stage\Design - Drawings\Working Drawings\04. Stormwater\TM26006 - TYPICAL DETAILS.dwg | SPHIWE MAHLANGU | 2026/11/12 10:45:21