THE MSUNDUZI MUNICIPALITY

HEAD: SUPPLY CHAIN MANAGEMENT
DR D.N. GAMBU (NDLOVU)

333 Church Street, Private Bag X205,
Pietermaritzburg, 3200
Tel: 033-392 2472, Fax: 033-392 2532

SUPPLY AND DELIVERY CONTRACT No. E18 OF 2026

ANNUAL SUPPLY AND DELIVERY OF CONSUMER DISTRIBUTION UNITS (CDU) AND ACCESSORIES

Tenderer's Name:																					
Postal Address:																					
																Postal Code					
Tel. No.											Cell. No.										
Contact Person:																					
E Mail Address:																					
CSD NUMBER : MAAA											TAX REF. NUMBER										

Tenders contained in sealed envelopes and marked with the **"SUPPLY AND DELIVERY CONTRACT No. E18 OF 2026"** and **"CONTRACT DESCRIPTION"** at the Msunduzi Municipality's Central Stores, 2 Abattoir Road (off Kershaw Street), Pietermaritzburg, 3201 (**coordinates -29.6126297;30.3610014**), not later than **12h00** on **Tuesday, 26 January 2027 when** they will be opened in public. Only Tenders placed in the Tender Box before the closing time above will be accepted.

THE MSUNDUZI MUNICIPALITY

TENDER SUBMISSION CHECKLIST

The Checklist below is attached hereto to assist Tenderers with the completion of the tender document. Tenderers are required to ***TICK*** the relevant boxes for verification purposes. Where information is not applicable to the tender, the symbols ***N/A*** must be inserted in the space provided.

It must be noted that the Council shall not be held liable for any loss or damage incurred to the Tenderer should the Tenderer fail to fulfil the requirements of the Tender.

No.	Description	Tenderer to Tick (√)	For Official Use Only	
1	Has the Tender Document been completed in **handwriting** and signed? **(No correction fluid used)**		***D***	
2	Has all tendered rates been priced in **handwritten** and corrections counter-signed? **(No correction fluid used)**		***D***	
3	Has all tendered amounts been arithmetically checked and the correct total amounts carried forward to the Summary Page and Tender Form?			
4	Has all information as required in terms of the Tender Document been submitted with the tender?		***D***	
5	Has the no "Site Inspection/Tender Briefing" meeting been attended and has the "Site Inspection/Tender Briefing" Certificate been completed and signed at the meeting?	**n/a**	***D***	
6	Have all Declarations contained in the Tender Document been completed and signed by the Tenderer, and before a Commissioner of Oaths (if applicable)?		***D***	
7	Has the "Tender Form" been completed and signed?		***D***	
8	Has the "Preference Points Claim Form in terms of the Preferential Procurement Regulations 2022" been completed in its entirety and signed?			
9	Is a valid Original Tax Clearance Certificate attached to the Tender Document or has a Tax Clearance Status Verification Pin been provided?		***D***	
10	Has the CSD Supplier Number and Unique Registration Reference Number been submitted with the Tender Document?		***D***	

****** D: Failure to comply with these Sections will prejudice the tender.***

Name of Tenderer : _____

Signature / Date : _____

THE MSUNDUZI MUNICIPALITY

SUPPLY AND DELIVERY CONTRACT No. E18 OF 2026

ANNUAL SUPPLY AND DELIVERY OF CONSUMER DISTRIBUTION UNITS (CDU) AND ACCESSORIES

1. COVER PAGE ……....1
2. TENDER SUBMISSION CHECKLIST ……2
3. CONTENTS ……3
4. TENDER NOTICE ……4
5. STANDARD CONDITIONS OF TENDER ……6
6. STANDARD CONDITIONS OF CONTRACT ……22
7. LEGISLATION ….....25
8. STANDARD SPECIFICATIONS….....26
9. SPECIFICATIONS ….....32
10. PRICING SCHEDULES ….....33

11. **DATA SHEETS 1 - 9**

11.1 INVITATION TO BID DOCUMENT 36
11.2 AUTHORITY TO SIGN……37
11.3 DECLARATION OF MUNICIPAL FEES 38
11.4 DECLARATION OF INTEREST 41
11.5 BIDDERS PAST SUPPLY CHAIN MANAGEMENT PRACTICES 43
11.6 CERTIFICATE OF INDEPENDENT BID DETERMINATION……..... 46
11.7 DECLARATION FOR PROCUREMENT ABOVE R10 MILLION …… 48

12. **TENDER FORM AND ANNEXURES**

12.1 TENDER FORM 51
12.2 ANNEXURE “A” – ALTERATIONS BY TENDERER..... 52
12.3 ANNEXURE “B” – OCCUPATIONAL HEALTH AND SAFETY ACT 54
12.4 ANNEXURE “C” – PREFERENTIAL PROCUREMENT POLICY..... 59
12.5 ANNEXURE “D” – TAX CLEARANCE CERTIFICATE 60
12.6 ANNEXURE “E” – CIPC REGISTRATION CERTIFICATE 61
12.7 ANNEXURE “F” – CSD REGISTRATION REPORT..... 62
12.8 ANNEXURE “G” – SUBMISSION OF TENDER - CD/USB-FLASH DRIVE 63

13. **TENDERERS PLEASE NOTE: -**

13.1 Tenderers are advised to check the number of pages and should any be missing or duplicated, or the reproduction thereof indistinct, or any descriptions ambiguous, or if this document contains any obvious errors they shall inform the Head: Supply Chain Management or the Engineer at once and have same rectified. No liability whatsoever will be incurred by the Council in respect of errors in any tender due to the Tenderer’s failure to observe this requirement.

13.2 The Tender Notice was advertised in The Witness newspaper on **Tuesday, 24 November 2026.**

13.3 The tender closes at the Tender Box located at the Msunduzi Municipality’s Central Stores, 2 Abattoir Road (off Kershaw Street), Pietermaritzburg, 3201, at 12h00 on **Tuesday, 26 January 2027**.

THE MSUNDUZI MUNICIPALITY

SUPPLY AND DELIVERY CONTRACT No. E18 OF 2026
ANNUAL SUPPLY AND DELIVERY OF CONSUMER DISTRIBUTION UNITS (CDU) AND ACCESSORIES

TENDER NOTICE

The Msunduzi Municipality hereby invites suitably experienced tenderers to submit quotations for the above works.

Tender documents shall be available from the Supply Chain Management Unit Offices, 5th Floor, A. S. Chetty Centre, 333 Church Street, Pietermaritzburg, from **12h00** on **Tuesday, 24 November 2026**. A non-refundable tender fee in the amount **R330.48** (Including VAT) per document shall be levied. Only cash or EFT transactions will be accepted. Tender documents can be downloaded and printed at the tenderer's cost from the National Treasury e-Tender Publication Portal on **www.etenders.gov.za**

For any technical related enquiries, please contact Poovan Naidoo (Electricity) on direct Telephone No. 076 481 8418 or e-mail address poovan.naidoo@msunduzi.gov.za

For any procurement related enquiries, please contact Phiwe Mthalane (Supply Chain Management Unit) on direct Telephone No. 033 – 392 2486 or e-mail address Phiwe.Mthalane@msunduzi.gov.za

Sealed quotation endorsed on the envelope **"SUPPLY AND DELIVERY CONTRACT No. E18 OF 2026"** must be placed in the Tender Box located at the Msunduzi Municipality's Central Stores, 2 Abattoir Road (off Kershaw Street), Pietermaritzburg, 3201 (coordinates -29.6126297; 30.3610014), not later than **12h00**, on **Tuesday, 26 January 2027**, when it will be publicly opened. Only quotations placed in the Tender Box shall be accepted.

The Validity period Four (4) months commencing from the closing date of tender..

EVALUATION CRITERIA

- Assessment of samples as per attached check list. The bidders samples who have met the required specifications will proceed to the next stage of evaluation.
- In terms of regulation 6 of the Preferential Procurement Regulations pertaining to the Preferential Procurement Policy Framework Act, 2000 (Act 5 of 2000) as amended and approved in 2022, responsive bids will be adjudicated by the Municipality on the 80/20 Specific goals system in terms of which points are awarded to bidders on the basis of: The bid price (maximum 80 points), Specific goals (maximum 20 points)

The allocation of Preference Points will be according to the following Specific Goals:

Specific goals	**Description**	**Max Points Awarded**
Black Owned Enterprise (BOE)"	≥ 51% Black Owned Enterprise or 51% management Control by South African Black People.	10
Business Enterprises owned by Women	≥ 51% Woman Owned Enterprise and Controlled by one or more woman or 51% Management control by one or more woman.	5
Location of a Business Enterprise	Business Situated Within the Msunduzi Municipality's Area of Jurisdiction	5
Total Preference Points		**20**

The Msunduzi Municipality does not bind itself to accept the lowest or any quotation and reserves the right to accept the whole or any part of a quotation. Each Service Provider will be informed of the quotation result. The Msunduzi Municipality expects businesses within the Pietermaritzburg and Midlands Region to support its contract and BEE/SMME initiatives.

MR S. F. MNDEBELE (MUNICIPAL MANAGER)

THE MSUNDUZI MUNICIPALITY

STANDARD CONDITIONS OF TENDER

1. DOCUMENTS

This document comprises of the Standard Conditions of Tender, Standard Conditions of Contract (N/A), Special Conditions of Contract (N/A), Legislation, Definitions, Specifications, Pricing Schedule, Tender Form, Drawings (N/A), Data Sheets and Annexures thereto.

2. SUBMISSION OF TENDERS

Tenders must be made out on the Tender Form annexed hereto. Service Providers are advised that this document must be completed by being hand written or typed and originaly signed by Pen and submitted in its entirety. Failure to comply with this condition shall result in the tender being disqualified.

Service Providers using Courier Companies or any other mode of transport to deliver their tender documents must ensure that the tender documents are delivered to the Tender Box located at the Msunduzi Municipality's Central Stores, 2 Abattoir Road (off Kershaw Street), Pietermaritzburg, 3201, before the close of tenders. The Council shall not be held liable for any tender document which is not timeously delivered, mislaid or incorrectly delivered due to the negligence of the Courier Company or any other party involved in the delivery of the tender documents, including any employee of the Council.

Sealed tenders endorsed with the appropriate Contract Number and Contract Title must reach the Msunduzi Municipality's Central Stores, 2 Abattoir Road (off Kershaw Street), Pietermaritzburg, 3201, not later than the closing date and time stated in the public advertisement inviting tenders, when they will be opened in public. Tenders shall remain valid for four (4) calendar months from the date of opening, except for the initial five (5) working days grace period after the close of tenders within which period a Service Provider may be permitted to withdraw its tender subject to an application with good and sufficient reasons being submitted in writing to obtain approval of such withdrawal, at the sole discretion of the Senior Manager: Supply Chain Management.

All literature submitted must be securely attached to the tender. The Council shall not be held liable for any loss or damages sustained due to the Service Provider's failure to comply with this condition.

In the case of a Service Provider withdrawing its tender after the expiry of the grace period, the Council may refuse to receive or consider, for such period as it may think fit, any further tenders from that Service Provider.

3. COMMUNICATION WITH MEMBERS OF THE COUNCIL OR COUNCIL EMPLOYEES

Without detracting from any prevailing law, no Service Provider shall offer, promise or give any person or persons connected with the adjudication, or awarding of the tender, any gratuity, bonus, discount or consideration of any kind in connection with the obtaining of a contract. Nor shall any Service Provider communicate with any member of the Council or a Council employee on a question affecting the awarding of a contract which is the subject of a tender, during the period between the closing date of tenders and the date of notification of the successful Service Provider; provided always that the Senior Manager: Supply Chain Management may, in exceptional circumstances, obtain additional information from a Service Provider to enable her to formulate her recommendation to Council.

Any attempt to contravene this condition, which is brought to the notice of the Supply Chain Management shall result in the disqualification of the Service Provider.

Prospective Service Providers are further advised that s118 of the Municipal Finance Management Act prohibits the interference, by any person, with the supply chain management system of the Municipality and the amendment of or tampering with any tender, quotation, contract or tender after its submission.

4. IMPORT PERMITS

The Council will not undertake to secure any import permits or currency for the import of any goods or materials required for the execution of this contract. The Service Provider must apply directly for any import permits or currency needed. However, the Council will furnish the successful Service Provider with a supporting statement, if required.

5. REGISTRATION WITH THE CENTRAL SUPPLIER DATABASE (CSD)

The National Treasury's Central Supplier Database (CSD) has been open for registration from 01 September 2015. The CSD serves as one single source of supplier information to all spheres of government. Within this system, suppliers are required to register once when they do business with the state. This will significantly reduce the administrative burden for businesses, especially small and medium sized enterprises. The database interfaces with the South African Revenue Service (SARS), the Companies and Intellectual Property Commission (CIPC) and the payroll system. It will electronically verify a supplier's tax status and enable public sector officials doing business with the state to be identified.

All prospective suppliers can register any time on the CSD website **www.csd.gov.za** Prospective suppliers may also visit the Provincial Treasury Database office situated at Treasury House, Ground Floor, 145 Chief Albert Luthuli Road, Pietermaritzburg, from 08h00 to 15h00, Mondays to Fridays, for any assistance with on-line registration on CSD.

For further information or enquiries, please contact 033 – 897 4516 / 033 – 897 4212 / 033 – 897 4624 / 033 – 897 4535 / 033 – 897 4676 / 033 – 897 4509 or Toll-Free at 0800 201 049 during office hours or via e-mail at **database@kzntreasury.gov.za**.

With effect from 01 July 2016, the Msunduzi Municipality will not award any tender to a supplier not registered as a prospective supplier on the CSD. Negotiations for the tender award will only be concluded with the qualify Service Provider(s) who is/are registered on the CSD on or after 01 April 2016.

In order for Council to verify your Company's registration with CSD, Service Providers are required to furnish the following information for verification purposes:

CSD Supplier Number	
Unique Registration Reference Number	

6. TAX CLEARANCE CERTIFICATE REQUIREMENTS

It is a condition of tender that the taxes of the successful Service Provider must be in order, or that satisfactory arrangements have been made with the South African Revenue Service (SARS) to meet the Service Provider's tax obligations.

Service Providers shall be required to submit, together with the tender document, a valid Tax Clearance Certificate and a Tax Compliance Status Verification Pin issued by SARS. Failure to submit a valid Tax Clearance Certificate and a Tax Compliance Status Verification Pin, the Council reserves the right to verify the same on National Treasury's Central Supplier's Database.
Should the Tax status becomes non-compliant prior to the final award of the contract being

made, the Council reserves the right to request the Service Provider to rectify their tax matters. In this instance, the Service Provider shall be given seven (7) working days written notice in which to comply. Should the Service Provider fail to comply with this request, the Council further reserves the right to make no award to the Service Provider and the Council shall not be held liable for any loss or damages sustained by the Service Provider.

7. RATES

The prices, rates or percentages quoted in the proposal shall be deemed to include all costs, including but not limited to materials, plant, labour, patent rights and royalties, freight, insurance, customs, railage, delivery, etc, unless the Service Provider states otherwise in the proposal.

- **"Price"** means an amount of money tendered for goods or services and includes all applicable taxes less unconditional discounts.

- **Section 64(1) of the VAT Act states**: Any price charged by a vendor for a taxable supply is deemed to include VAT, whether or not explicitly stated. Thus, even if bidder B's invoice does not explicitly include VAT, the price is considered VAT inclusive.
- **NB**: when submitting this tender bidders are advised that regardless of the VAT status of being a VAT or non VAT vendor the price must include VAT
- Further to the above the price shall be deemed to be VAT inclusive regardless of whether the bidder is the VAT vendor or not.

8. INCOMPLETE TENDERING

Tenders may be rejected if they show any additional, conditional or incomplete offers or irregularities of any kind in either the Tender Form or the Pricing Schedule.

Partial awards ***may*** be made where this is perceived by the Supply Chain Management or the Bid Evaluation Committee. Council reserves the right to take into account the principle of the distribution of works in order to empower SMME's and or Local Suppliers.

Should there be any difference or discrepancy between the prices and particulars contained in the Tender Form and those contained in any covering letter or pricing schedule submitted by the Service Provider, the prices and particulars contained in the Tender Form shall prevail.

9. ACCEPTANCE OF ANY TENDER

9.1 The Council does not bind itself to accept the lowest or any tender and reserves the right to accept the whole or any part of a tender.

9.2 The procedure/s which shall be followed with the acceptance of a tender are as follows:

9.2.1 Where in the tender document, Service Providers are required to submit Works Insurance, Sureties, Public Liability Insurance or any other provisional criteria, a letter of Provisional Acceptance will be sent to the successful Service Provider/s stipulating which amount or rate/s have been accepted and the requirements for the final award.

9.2.2 In this instance, the Service Provider/s shall be required to satisfy the requirements of the Provisional Letter of Acceptance within fourteen (14) days from date of issue of the Provisional Letter of Acceptance.

9.2.3 Should the Service Provider/s, fails to comply with the requirements of such provisional acceptance within the period specified in same or any variation thereto, and the Council elects not to confirm the provisional acceptance of the tender on that ground, the Council may refuse to receive or consider for such period as it may think fit, any further tenders from that/those Service Provider(s).

9.2.4 Once the requirements of the Provisional Letter of Acceptance have been satisfied, a Final Letter of Acceptance will be sent by the Supply Chain Management to the successful Service Provider/s

9.2.5 Prior to the undertaking of any works, the successful Service Provider/s shall be required to enter into a Service Level Agreement (SLA) with the Council to address any post award qualification requirements as per the tender document.

9.2.6 Once the SLA has been concluded, the Tender, Provisional Letter of Acceptance, the Final Letter of Acceptance and the SLA, shall constitute a binding agreement between the Service Provider/s and the Council.

9.2.7 Should the Service Provider/s fail to enter into a contract when called upon to do so, then the Council may refuse to receive or consider for such period as it may think fit, any further tenders from that/those Service Provider/s.

9.3 Where no Insurances, Sureties or any other provisional criteria are required, a Final Letter of Acceptance stipulating which rate/s has been accepted will be sent by the Supply Chain Management to the successful Service Provider/s notifying the Service Provider/s of Council's intent to make an award of the contract.

9.4 Prior to the undertaking of any works, the successful Service Provider/s shall be required to enter into a Service Level Agreement (SLA) with the Council to address any post award qualification requirements as per the tender document.

9.5 Once the SLA has been concluded, the Tender, the Final Letter of Acceptance and the SLA, shall constitute a binding agreement between the Service Provider/s and the Council.

9.6 Should the Service Provider/s fail to enter into a contract when called upon to do so, then the Council may refuse to receive or consider for such period as it may think fit, any further tenders from that/those Service Provider/s.

Unless otherwise stipulated in the covering letter submitted with the tender, the Service Provider shall have waived, renounced and abandoned any conditions printed or written upon any stationery used for the purpose of, or in connection with, the submission of the tender which are in conflict with the Council's Conditions of Tender and the Standard Conditions of Contract. The Service Provider is warned that any material divergence from the official conditions or specification may render the tender liable to disqualification.

10. DOMICILIUM CITANDI ET EXECUTANDI

For the purpose of the service of all documents and the giving of notice as may be required in terms of this contract, or as a result of any action arising in conjunction with it, the Council chooses City Hall, 169 Chief Albert Luthuli Street (formerly Commercial Road), Pietermaritzburg as its *domicilium citandi et executandi.*

The Service Provider's *domicilium citandi et executandi* shall be whatever street address is given in the Tender Form attached hereto. Either party may, at any time, give one (1) month notice, in writing, of a change of its *domicilium citandi et executandi* provided that such address shall be within the Republic of South Africa.

11. DATA SHEETS

Service Providers should complete, in full, all the Data Sheets attached to this document. These include, but are not limited to, the following:

- Declaration of Interest (MBD 4);
- Authority to Sign Document;
- Pricing Schedule (MBD 3.1 / 3.2 / 3.3 as applicable);
- Declaration of Bidder's Past Supply Chain Management Practices (MBD 8);
- Certificate of Independent Bid Determination (MBD 9); and
- Any other applicable Data Sheets or forms contained within the tender documentation.

Where Data Sheets and/or any other documentation are required to be commissioned, such documents must be duly stamped and signed by a Commissioner of Oaths, where applicable. Failure to complete and submit the required documentation in its entirety may result in the disqualification of the bid and render the offer non-responsive.

Completion of Tender Form

It is a compulsory requirement that the Tender Form be fully completed and signed by an authorised representative of the bidder. Failure to comply with this provision will render the bid unresponsive (invalid) and such bids will not be considered for adjudication.

12. PROHIBITION ON AWARDS TO PERSONS IN THE SERVICE OF THE STATE

The Supply Chain Management Municipal Regulations read in conjunction with Msunduzi Supply Chain Management policy states that the Council may not make any award to a person:

(a) Who is in the service of the state;
(b) If that person is not a natural person, of which and director, manager, principal shareholder or stakeholder is a person in the service of the state; or
(c) Who is an advisor or consultant contracted with the municipality or municipal entity.

13. MUNICIPAL FEES

All Service Providers are to sign the Declaration herein declaring that their Municipal Fees are in order, or that proper arrangements have been made with the Council. Service Providers must include the relevant account numbers in the declaration.

14. APPEALS AND/OR OBJECTIONS

Any Service Provider aggrieved by decisions or actions taken by the Municipality must lodge within fourteen (14) calendar days from the day of receipt of a regret letter, a written objection or complaint to the Municipal Manager / Supply Chain Management. The appeal must be submitted in writing with the grounds of appeal within the stipulated fourteen (14) days. No appeal/objection will be entertained should the afore-mentioned condition not be adhered to, and the Municipality shall not be held liable for any loss or damages sustained by the Service Provider due to the Service Provider's failure to adhere to the above condition.

15. PREFERENCE POINTS CLAIMED IN TERMS OF THE PREFERENTIAL PROCUREMENT REGULATIONS 2022

Service Providers claiming preference points shall be required to complete Annexure "B" hereto in its entirety and to fully comply with the General Conditions, Definitions and Directives stated therein.

In terms of Regulation 4(2); 5(2); 6(2) and 7(2) of the Preferential Procurement Regulations, 2022, Preference Points must be awarded for Specific Goals stated in the tender.

Service Providers are required to submit proof or documentation required in terms of this tender to claim points for Specific Goals. Failure to do so shall result in no Preference Points being awarded to the Service Provider and the Council shall not be held liable for any loss or damages in this regard.

16. JOINT VENTURE AGREEMENTS AND CONSORTIUMS

Service Providers intending to tender in the form of Joint Ventures/Consortiums **should submit** the following documentation together with the tender:

(1) Tax Compliance Status Verification Pins issued by SARS of all parties of the Joint Venture/Consortium.

(2) CSD Reports of all parties of the Joint Venture/Consortium.

(3) Signed copies of:

(a) The Declaration of Interest Form,
(b) The Declaration of Bidder's Past Supply Chain Management Practices Form, and
(c) The Certificate of Independent Bid Determination Form.

(4) An undertaking duly signed by all parties of the Joint Venture/Consortium indicating their intention to enter into an agreement for the purposes of this contract.

Further to the above, the name of the Joint Venture/Consortium should appear on the relevant pages of the document.

17. ADJUDICATION CRITERIA

The tender shall be evaluated on a Two Stage Evaluation System – Stage One: Functionality and Stage Two: 80/20 Point System in accordance with the Msunduzi Municipality's Supply Chain Management Policy (incorporating Preferential Procurement) as prescribed in terms of the Preferential Procurement Regulations 2022, pertaining to the Preferential Procurement Policy Framework Act, Act No. 5 of 2000.

18. COMBATIVE TENDERING

The Supply Chain Management Regulations states that Combative tendering practices are unethical and illegal. These include but are not limited to:

(i) Suggestions to fictious lower quotations,
(ii) Reference to non-existent competition,
(iii) Exploiting errors in tenders,
(iv) Soliciting tenders from Service Providers whose names appear on the list of restricted Service Providers/Suppliers/Persons, and
(v) Submission of two tenders by a Service Provider.

Any attempt by a Service Provider to contravene this condition which is brought to the notice of the Municipal Manager or the Senior Manager: Supply Chain Management shall result in the disqualification of the tender. The Council further reserves the right to take any other action as it may deem necessary.

19. ALTERATIONS BY TENDERER

If a tenderer wishes to submit alternative proposals for consideration or wishes to change the Conditions of Contract, Specifications, Quantities or Drawings, or to qualify the tender in any way, such changes and/or proposals are to be listed in Annexure “A” hereto, failing which the tender will be deemed to be unqualified. It must be clearly understood that the Council will be under no obligation to accept any such qualification.

THE MSUNDUZI MUNICIPALITY
STANDARD CONDITIONS OF CONTRACT

1. DEFINITIONS AND INTERPRETATIONS

The following definitions shall apply:-

"Council" means the Msunduzi Municipality.

"Engineer" means the General Manager: Community Services of the day of the Msunduzi Municipality or the said Manager's duly appointed Representative.

"Head: Supply Chain Management" means the Head: Supply Chain Management of the day of the Msunduzi Municipality or the Head: Supply Chain Management's duly appointed Representative.

"Contractor" means the person, firm or company whose tender has been accepted by the Msunduzi Municipality and includes the supplier's heirs, executors, administrators, trustees, judicial managers or liquidators, as the case may be, but not, except with the written consent of the Council, any assignee of the Supplier.

"Contract Document" means the Standard Conditions of Tender, Standard Conditions of Contract, Special Conditions (if any), Specifications, Schedule of Quantities/Equipment, Priced Schedule of Rates and Prices, Drawings (if any), Tender Form and Annexures thereto and the final Letter of Acceptance.

"Contract Price" means the sum named in the tender, subject to such additions thereto or deductions therefrom as may be made from time to time under the provisions hereinafter contained.

"Special Conditions" means any addition to or departure from or amendment of these Standard Conditions as set out in Annexure "A": Alterations by Tenderer hereof.

"Drawings" means the drawings referred to in the Specification and any modification of such drawings approved in writing by the Engineer and such other drawings as may from time to time be furnished or approved in writing by the Engineer.

"Goods" means the equipment, plant, vehicles or materials to be supplied in accordance with the Contract.

"Preferential Procurement Policy" means the Preferential Procurement Policy Framework Act, 2000 (Act No 5 of 2000).

"SARS" means the South African Revenue Services.

2. QUALITY OF MATERIALS AND WORKMANSHIP AND TESTS

All materials and workmanship shall be of the respective kinds described in the contract and in accordance with the specification and shall be subjected to such tests, carried out by such persons, as the Engineer may direct at the place of manufacture or fabrication or at the delivery site or at all or any of such places. The Contractor shall provide such assistance, instruments, machines, labour and materials as are normally required for examining, measuring and testing any work and the quality, mass or quality, mass or quantity of any materials for testing as may be required by the Engineer. The Contractor may be present at any tests which the Engineer decides to carry out.

3. SAMPLES FOR QUALITY CONTROL

If samples are required in terms of the specification, such samples shall be supplied by the Contractor at his/her own cost.
All samples approved by the Engineer will be retained by him/her as standards for the duration of the contract.
The Council reserves the right to purchase any sample submitted at the tender price. Samples not so purchased will be recoverable by the Contractor at his/her expense.

4. REMOVAL OF IMPROPER MATERIALS

All materials delivered to the delivery site will be inspected by the Engineer and should any be delivered which, in the opinion of the Engineer, are inferior in quality or workmanship to the deposited sample or to the standard required in the Specification or be found to be damaged on delivery, such goods shall be immediately removed by the Contractor.

No payment will be made for any materials nor for any loss incurred by the Contractor as a consequence of such rejection.

5. QUANTITY

The Council does not guarantee to purchase any specific quantity and orders will be placed for materials as and when they are required. The tendered price shall apply to all purchases regardless of the quantity ordered. Should the Contractor wish to place any limit on the maximum quantity to be supplied, this must be clearly stated in the tender.

6. DELIVERY

Prices shall include for the delivery of the materials as detailed in the specifications. The Contractor shall be responsible for all damages or breakages in transit until the materials have been accepted by the Engineer at the delivery site.

Immediately after forwarding any materials, an advice note shall be sent in duplicate to the Engineer, Private Bag X205, Pietermaritzburg, giving the size and mass of each article, where applicable, and the date of despatch.

All ordered materials shall be delivered within the period stated in the tender. If a Tenderer is unable to comply with this clause, the delivery period offered must be stated.

7. PENALTY FOR LATE DELIVERY

Upon any delay in delivery beyond the tendered delivery period, the Council shall be entitled forthwith to purchase services of the same description as and in lieu of those specified to be supplied, or forthwith to cancel the contract and to purchase elsewhere such materials as may be required during the contract period and the Contractor shall bear any difference in price between any materials so purchased and the tendered price.

The amount of such difference shall be paid by the Contractor to the Council immediately on demand, or the Council may deduct such difference from moneys (if any) otherwise payable to the Contractor in respect of materials or services already delivered under this or any other contract.

8. TERMINATION OF THE CONTRACT

Should the Contractor (for whatever reason) fail to execute the works in accordance with the terms and conditions stated herein, the Council reserves the right to cancel the contract forthwith without prejudice to Council and the Council shall not be held liable for any loss or damages resulting from such cancellation.

Further to the above, the Council reserves the right to enforce Clause 7 above including any other remedies it may deem necessary.

9. TERMS OF PAYMENT

Payment will be made by the Chief Financial Officer (CFO) within thirty (30) days on receipt of a certificate of payment issued by the Engineer and will be made by means of a cheque drawn upon the Council's bankers in Pietermaritzburg. No cash payments shall be made.

Where the value of the works exceed R3 000.00 excluding VAT, the Contractor must quote the Council's VAT Registration No. 4600107835 on all Tax Invoices for payment purposes.

Where offers of discounts eg for payment within thirty (30) days of rendering accounts, are made by Contractor, these will be taken into account in the adjudication of tenders. Contractors shall be required to have a bank account in the legal name of the Contractor as indicated on the Tax Clearance Certificate. No payment whatsoever will be made should the Contractor fail to comply with this requirement and the Council shall not be held liable for any loss or damages sustained by the Contractor in this regard.

10. PRICE ADJUSTMENT/ESCALATION

$$E = \frac{V \times (Ie - 1)}{Io}$$

(a) In all cases where a tendered price is offered subject to adjustment, such adjustment shall be calculated l in accordance with the following formula:-

Where:

E	=	the amount of adjustment
V	=	tendered price/value
Ie	=	index applicable at the invoice date, and
Io	=	the base index

unless the Contractor expressly stipulates and sets out in detail an alternative formula in terms of which prices will escalate.

Where Contractors have linked their prices to manufacturers/suppliers price increase, full disclosure of the rates/prices must be submitted together with the tender.

(b) Notwithstanding the provisions of paragraph (a), the Council shall not be liable for adjustment unless the Contractor specifies a price index (or indices) in respect of the materials to be supplied.

(c) For the purpose of calculating the amount of adjustment in terms of any formula, the base index shall be the index for ***October 2022*** regardless of the actual due tender date.

(d) The index for the previous month shall apply up to and including the 15th day of a month, thereafter the current month's index shall apply.

(e) The applicable index (indexes) is: _____

In any case where a Contractor has complied with the conditions set out above, the Council shall nonetheless not be liable to pay for adjustment unless the Contractor, in submitting an account, submits, on each occasion the Contractor does so, a separate account reflecting the adjustment amount claimed together with all calculations and documents necessary to verify the claim.

Upon receipt of the claim account referred to above, the Council shall not however be obliged to settle the account until the amount claimed is verified by the Council's Auditors in terms of the preceding paragraphs.

The Contractor must please submit claims before 31 July for the previous financial year ending 30 June. No claims submitted after this date will be entertained.

11. GOVERNMENT CONTROLLED PRICES

Where the tendered price of any item placed on contract is controlled by the various Control Boards constituted under the Marketing Act or by the Price Controller, such price shall, in the event of any amendment to the price ruling at the time the tender was submitted being sanctioned by the Price Controller, be subject to a like increase or decrease as the case may be. Contractors must state clearly which items are subject to such control; unless this is done no payments will be made in the excess of the tendered prices. In the event of price control over any item on contract being withdrawn during the currency of the contract, the contract price applicable to such item thereafter shall not be higher than the price in operation immediately prior to the withdrawal of price control.

If the Contractor claims escalation, Clause 10 does not apply.

12. FORWARD COVER

The Contractor will be deemed by submission of a tender to hold or to have arranged forward foreign exchange cover on all imported goods or materials, with the cost thereof included in the price schedule. In any case which a Contractor tenders a price subject to exchange rate fluctuations, the exchange rate/s and the date/s thereof at which the goods or materials are offered are based must be clearly indicated on Annexure “A”: Alterations by Tenderer. If no exchange rate/s is indicated, the tender prices shall be considered not subject to any exchange rate fluctuations.

13. INSURANCE AND RAILAGE RATES ETC

Should there be any increase in the statutory rates of freight, insurance and railage, a pro rata increase or decrease shall be made in the price of the material delivered. The contractor shall notify the Municipal Manager, or the Chief Financial Officer, or the Head: Supply Chain Management as the case may be of any variation in rates as soon as the Contractor is aware of them.

A claim for increased freight, insurance and railage will be admitted on production of the original papers showing clearly that the amount has been paid by the contractor.

14. ASSIGNMENT AND SUBLETTING

Neither the Supplier nor the Council shall assign the contract or any part thereof or any benefit or interest therein or thereunder without the written consent of the other.

The Supplier shall not sub-let the whole or any part of this contract without the written consent of the Engineer and such consent, if given, shall not relieve the Supplier from any liability or obligation under the contract.

15. SECRECY OF INFORMATION

Subject to the provisions of the Promotion of Access to Information Act, the information revealed in this tender document is to be classified as confidential. Accordingly, the Engineer reserves the right to request references and generally examine bona fides and available facilities of any company of firm wanting to participate in this contract.

16. LAW TO APPLY

The contract shall in all respects be construed in accordance with the law of the Republic of South Africa, and any difference that may arise between the Council and the Contractor in regard to the contract shall be settled in the Republic of South Africa.

17. PATENT RIGHTS

The Contractor shall pay all royalties and expenses and be liable for all claims in respect of the use of patent rights, trade marks or other protected rights, and shall hold the Council indemnified and harmless against any claims for loss or damage to (including legal expenses) arising therefrom.

18. SEQUESTRATION OR SURRENDER OF CONTRACTOR'S ESTATE

In the event of an order being made for sequestration of the Contractors estate, whether provisional or final, or in the event of an application being made for such order, or in the event of the Contractor making application for the surrender of the Contractors estate, or if the Contractor shall enter into, make or execute any deed of assignment or other composition or arrangement with, or assignment for the benefit of the Contractors creditors, or purport to do so, or if the Contractor, being a company, shall pass a resolution, or if the Court shall make an order for the liquidation of such company, the Council shall have the right, summarily and without recourse to law, to terminate the contract without payment of any compensation to the Contractor, and without prejudice to the right of the Council to sue the Contractor for any damages sustained by it in consequence of one or the other of the afore-mentioned events.

19. CONTRACT TO BE IN CONFORMITY WITH BY-LAWS AND ANY OTHER APPLICABLE LAWS

The contract shall be carried out subject to and in conformity with any law, regulation or By-law which is of application thereto and shall be conditional upon any necessary consent required by law being obtained.

THE MSUNDUZI MUNICIPALITY

STANDARD CONDITIONS OF CONTRACT FOR SUPPLIES CONTRACTS

1. DEFINITIONS

The following definitions shall apply:

"Council" means the Msunduzi Municipality.

"Engineer" means the Deputy Municipal Manager: Electricity Supply Services of the day of the Msunduzi Municipality or the said Manager's duly appointed Representative.

"Head: Supply Chain Management" means the Head: Supply Chain Management of the day of the Msunduzi Municipality or the Head: Supply Chain Management's duly appointed Representative.

"Contractor" means the person, firm or company whose tender has been accepted by the Msunduzi Municipality and includes the supplier's heirs, executors, administrators, trustees, judicial managers or liquidators, as the case may be, but not, except with the written consent of the Council, any assignee of the Supplier.

"Contract Document" means the Conditions of Tender, these Standard Conditions, Special Conditions (if any), Specifications, Schedule of Quantities/Equipment, Drawings, Priced Schedule of Rates and Prices (if any), Tender Form and Annexures thereto and the final Letter of Acceptance.

"Contract Price" means the sum named in the tender, subject to such additions thereto or deductions therefrom as may be made from time to time under the provisions hereinafter contained.

"Special Conditions" means any addition to or departure from or amendment of these Standard Conditions as set out in Annexure A hereof.

"Drawings" means the drawings referred to in the Specification and any modification of such drawings approved in writing by the Engineer and such other drawings as may from time to time be furnished or approved in writing by the Engineer.

"Goods" means the equipment, plant, vehicles or materials to be supplied in accordance with the Contract.

"Preferential Procurement Policy" means the Preferential Procurement Policy Framework Act, 2000 (Act No 5 of 2000).

"SARS" Means the South African Revenue Services.

2. QUALITY OF MATERIALS AND WORKMANSHIP AND TESTS

All materials and workmanship shall be of the respective kinds described in the contract and in accordance with the specification and shall be subjected to such tests, carried out by such persons, as the Engineer may direct at the place of manufacture or fabrication or at the delivery site or at all or any of such places. The Contractor shall provide such assistance, instruments, machines, labour and materials as are normally required for examining, measuring and testing any work and the quality, mass or quality, mass or quantity of any materials for testing as may be required by the Engineer. The Contractor may be present at any tests which the Engineer decides to carry out.

3. SAMPLES FOR QUALITY CONTROL

If samples are required in terms of the specification, such samples shall be supplied by the Contractor at his own cost. All samples approved by the Engineer will be retained by him as standards for the duration of the contract. The Council reserves the right to purchase any sample submitted at the tender price. Samples not so purchased will be recoverable by the Contractor at his own expense.

4. REMOVAL OF IMPROPER MATERIALS

All materials delivered to the delivery site will be inspected by the Engineer and should any be delivered which, in the opinion of the Engineer, are inferior in quality or workmanship to the deposited sample or to the standard required in the Specification or be found to be damaged on delivery, such goods shall be immediately removed by the Contractor. No payment will be made for any materials nor for any loss incurred by the Contractor as a consequence of such rejection.

5. QUANTITY

The Council does not guarantee to purchase any specific quantity and orders will be placed for materials as and when they are required. The tendered price shall apply to all purchases regardless of the quantity ordered. Should the Contractor wish to place any limit on the maximum quantity to be supplied, this must be clearly stated in the tender.

6. DELIVERY

Prices shall include for the delivery of the materials as detailed in the specifications. The Contractor shall be responsible for all damages or breakages in transit until the materials have been accepted by the Engineer at the delivery site.

Immediately after forwarding any materials, an advice note shall be sent in duplicate to the Engineer, Private Bag X205, Pietermaritzburg, giving the size and mass of each article, where applicable, and the date of despatch. All ordered materials shall be delivered within the period stated in the tender. If a Tenderer is unable to comply with this clause, the delivery period offered must be stated.

7. PENALTY FOR LATE DELIVERY

Upon any delay in delivery beyond the tendered delivery period, the Council shall be entitled forthwith to purchase services of the same description as and in lieu of those specified to be supplied, or forthwith to cancel the contract and to purchase elsewhere such materials as may be required during the contract period and the Contractor shall bear any difference in price between any materials so purchased and the tendered price.

The amount of such difference shall be paid by the Contractor to the Council immediately on demand, or the Council may deduct such difference from moneys (if any) otherwise payable to

the Contractor in respect of materials or services already delivered under this or any other contract.

8. TERMINATION OF THE CONTRACT

Should the Contractor (for whatever reason) fail to execute the works in accordance with the terms and conditions stated herein, the Council reserves the right to cancel the contract forthwith without prejudice to Council and the Council shall not be held liable for any loss or damages resulting from such cancellation. Further to the above, the Council reserves the right to enforce Clause 7 above including any other remedies it may deem necessary.

9. TERMS OF PAYMENT

Payment will be made by the Chief Financial Officer (CFO) within thirty (30) days on receipt of a certificate of payment issued by the Engineer and will be made by means of a cheque drawn upon the Council's bankers in Pietermaritzburg. No cash payments shall be made.

Where the value of the works exceeds R3 000.00 excluding VAT, the Contractor must quote the Council's VAT Registration No. 4600107835 on all Tax Invoices for payment purposes.

Where offers of discounts e.g. for payment within thirty (30) days of rendering accounts, are made by Contractor, these will be taken into account in the adjudication of tenders. Contractors shall be required to have a bank account in the legal name of the Contractor as indicated on the Tax Clearance Certificate.

No payment whatsoever will be made should the Contractor fail to comply with this requirement and the Council shall not be held liable for any loss or damages sustained by the Contractor in this regard.

10. PRICE ADJUSTMENT/ESCALATION

(b) In all cases where a tendered price is offered subject to adjustment, such adjustment shall be calculated in accordance with the following formula: -

$$E = \frac{V \times (Ie - 1)}{Io}$$

Where:

E	=	the amount of adjustment
V	=	tendered price/value
Ie	=	index applicable at the invoice date, and
Io	=	the base index

unless the Contractor expressly stipulates and sets out in detail an alternative formula in terms of which prices will escalate.

Where Contractors have linked their prices to manufacturers/suppliers price increase, full disclosure of the rates/prices must be submitted together with the tender.

(b) Notwithstanding the provisions of paragraph (a), the Council shall not be liable for adjustment unless the Contractor specifies a price index (or indices) in respect of the materials to be supplied.

(c) For the purpose of calculating the amount of adjustment in terms of any formula, the base index shall be the index for ***July 2024*** regardless of the actual due tender date.

(d) The index for the previous month shall apply up to and including the 15th day of a month, thereafter the current month's index shall apply.

(e) The applicable index (indexes) is: _____

In any case where a Contractor has complied with the conditions set out above, the Council shall nonetheless not be liable to pay for adjustment unless the Contractor, in submitting an account, submits, on each occasion the Contractor does so, a separate account reflecting the adjustment amount claimed together with all calculations and documents necessary to verify the claim.

Upon receipt of the claim account referred to above, the Council shall not however be obliged to settle the account until the amount claimed is verified by the Council's Auditors in terms of the preceding paragraphs.

The Contractor must please submit claims before 31 July for the previous financial year ending 30 June. No claims submitted after this date will be entertained.

11. GOVERNMENT CONTROLLED PRICES

Where the tendered price of any item placed on contract is controlled by the various Control Boards constituted under the Marketing Act or by the Price Controller, such price shall, in the event of any amendment to the price ruling at the time the tender was submitted being sanctioned by the Price Controller, be subject to a like increase or decrease as the case may be. Contractors must state clearly which items are subject to such control; unless this is done no payments will be made in the excess of the tendered prices. In the event of price control over any item on contract being withdrawn during the currency of the contract, the contract price applicable to such item thereafter shall not be higher than the price in operation immediately prior to the withdrawal of price control.

If the Contractor claims escalation, Clause 10 does not apply.

12. FORWARD COVER

The Contractor will be deemed by submission of a tender to hold or to have arranged forward foreign exchange cover on all imported goods or materials, with the cost thereof included in the price schedule. In any case which a Contractor tenders a price subject to exchange rate fluctuations, the exchange rate/s and the date/s thereof at which the goods or materials are offered are based must be clearly indicated on Annexure “A”: Alterations by Tenderer. If no exchange rate/s is indicated, the tender prices shall be considered not subject to any exchange rate fluctuations.

13. INSURANCE AND RAILAGE RATES ETC

Should there be any increase in the statutory rates of freight, insurance and railage, a pro rata increase or decrease shall be made in the price of the material delivered. The contractor shall notify the Municipal Manager, or the Chief Financial Officer, or the Head: Supply Chain Management as the case may be of any variation in rates as soon as the Contractor is aware of them.

A claim for increased freight, insurance and railage will be admitted on production of the original papers showing clearly that the amount has been paid by the contractor.

14. ASSIGNMENT AND SUBLETTING

Neither the Supplier nor the Council shall assign the contract or any part thereof or any benefit or interest therein or thereunder without the written consent of the other.

The Supplier shall not sub-let the whole or any part of this contract without the written consent of the Engineer and such consent, if given, shall not relieve the Supplier from any liability or obligation under the contract.

15. SECRECY OF INFORMATION

Subject to the provisions of the Promotion of Access to Information Act, the information revealed in this tender document is to be classified as confidential. Accordingly, the Engineer reserves the right to request references and generally examine bona fides and available facilities of any company of firm wanting to participate in this contract.

16. LAW TO APPLY

The contract shall in all respects be construed in accordance with the law of the Republic of South Africa, and any difference that may arise between the Council and the Contractor in regard to the contract shall be settled in the Republic of South Africa.

17. PATENT RIGHTS

The Contractor shall pay all royalties and expenses and be liable for all claims in respect of the use of patent rights, trade marks or other protected rights, and shall hold the Council indemnified and harmless against any claims for loss or damage to (including legal expenses) arising therefrom.

18. SEQUESTRATION OR SURRENDER OF CONTRACTOR'S ESTATE

In the event of an order being made for sequestration of the Contractors estate, whether provisional or final, or in the event of an application being made for such order, or in the event of the Contractor making application for the surrender of the Contractors estate, or if the Contractor shall enter into, make or execute any deed of assignment or other composition or arrangement with, or assignment for the benefit of the Contractors creditors, or purport to do so, or if the Contractor, being a company, shall pass a resolution, or if the Court shall make an order for the liquidation of such company, the Council shall have the right, summarily and without recourse to law, to terminate the contract without payment of any compensation to the Contractor, and without prejudice to the right of the Council to sue the Contractor for any damages sustained by it in consequence of one or the other of the afore-mentioned events.

19. CONTRACT TO BE IN CONFORMITY WITH BY-LAWS AND ANY OTHER APPLICABLE LAWS

The contract shall be carried out subject to and in conformity with any law, regulation or By-law which is of application thereto and shall be conditional upon any necessary consent required by law being obtained.

THE MSUNDUZI MUNICIPALITY

LEGISLATION

1.0 GENERAL

1.1 Contractors will be deemed by virtue of submitting a tender to have undertaken to be aware of and comply fully for all purposes under this contract with all current legislation and related regulations. The following Acts as amended from time to time, are listed for the attention of the Contractor, without prejudice and without in any way relieving the Contractor of the obligation to continuously comply with all the laws of South Africa for the entire duration of this contract, the cost of so doing being expressly included in the contract sum. It is the sole duty of the Contractor to ensure that it acquaints itself and comply with all applicable legislation. **The council shall not be liable in any way whatsoever for any errors or omissions in the legislation listed herein.**

1.2 **THE OCCUPATIONAL, HEALTH AND SAFETY ACT (ACT 85 OF 1993) (OHS ACT)**

The OHS Act covers inter alia "any work in connection with -

a) the erection, maintenance, alteration, renovation, repair, demolition or dismantling of an addition to a building;
b) the installation, erection or dismantling of machinery;
c) the construction, maintenance, demolition or dismantling of any bridge, dam, canal, railway, street, runway, sewer or water reticulation system or work on any similar project;
d) the moving of earth, clearing of land or making of an excavation or work on any similar project." (General Administrative Regulations Clause 1).

It is recorded that the subject of this contract falls within the scope of the foregoing work definition, and that the Employer in terms of this contract is the Mandator and that the Contractor is the Mandatory in terms of the OHS Act.

1.3 The arrangements and procedures to ensure compliance by the Mandatory with the provisions of the OHS Act referred to in the Agreement, in Annexure B, between the Employer and the Contractor in this contract are:

1.3.1 The Mandatory shall keep a record of all incidents in terms of Clause 10 (1) of the General Administration Regulations (GAR).

1.3.2 The Mandatory shall cause every incident to be investigated in terms of Clause 10 (2) of the GAR.

1.3.3 The Mandatory shall cause all such records to be examined by a Safety Committee in terms of Clause 10 (3) of the GAR.

1.3.4 The Mandatory shall on demand furnish the divisional inspector with such returns as may be required in terms of Clause 14 of the GAR.

1.3.5 The Mandatory shall charge a full-time employee designated in writing by the Mandatory with the duty of supervising the performance of the work (or the Mandatory may personally undertake this duty) in terms of Clause 11 of the General Safety Regulations.

1.3.6 The Mandatory shall before commencing or carrying out the work, inform the divisional inspector in writing of:-

a) the address of the premises on which such work will be carried out,
b) the nature of such work,
c) the date on which it is expected that such work will be commenced, and
d) the date on which it is expected that such work will be completed;

all in terms of Clause 15c of the GAR

1.3.7 The Mandatory shall comply with all other aspects of the OHS Act relative to the nature of the works and shall scrupulously observe and execute any instruction given by an official inspector with reference thereto.

2.0 THE COMPENSATION FOR OCCUPATIONAL INJURIES AND DISEASES ACT (ACT 130 of 1993) (COID ACT)

2.1 Contractors are required to register as employers in terms of the COID Act.

2.2 Contractors must pay the assessments due in terms of the COID Act relative to their employee records including all sub-contractors and community based labour.

2.3 In this specific contract the Contractor further acknowledges that the Employer shall have the right, without prejudice, to deduct any shortfall in compensation due to any employee of the Contractor (or sub-contractor) from monies due or which may become due to the Contractor, and so effect settlement of the matter.

3.0 THE LABOUR RELATIONS ACT (ACT 66 of 1995) (LR ACT)

3.1 Contractors are required to register as employers in terms of the LR Act.

3.2 Contractors are required to pay all employee and employer contributions to the Unemployment Benefits Fund, other than in respect of casual employees defined as persons who work for less than eight hours in any one week, or in respect of persons who by virtue of lawful reasons are exempt therefrom.

4.0 THE BASIC CONDITIONS OF EMPLOYMENT ACT (ACT 3 of 1983) (BCE ACT)

4.1 Contractors in their capacity as employers are required to comply with the provisions of the BCE Act with special reference to their employees' terms and conditions of employment.

5.0 THE INCOME TAX ACT (ACT 58 of 1962)

5.1 Contractors in their capacity both as business enterprises and employers are obliged to register and comply with the requirements of the Receiver of Revenue.

6.0 THE VALUE ADDED TAX ACT (ACT 89 of 1991)

6.1 Contractors in their capacity as business enterprises are required, if their annual turnover exceeds or is expected to exceed R150 000 by the end of February each year, to register as VAT vendors with the Receiver of Revenue for the purpose of paying, recovering, charging and returning VAT to the State via the Receiver of Revenue.

6.2 It is recorded that the Employer in this contract is registered as a VAT vendor.

7.0 THE ENGINEERING PROFESSION ACT OF SOUTH AFRICA (ACT 114 of 1990)

7.1 Where work undertaken in connection with this contract falls within the meaning of "kinds of work reserved for professional engineers" as fully set out in the Engineering Profession Act of South Africa 1990, or any amendments thereof, only persons registered in terms of the above

Act, may assume full responsibility, according to competency under the Act, for the respective sections and phases of such work, as described in the Act, particularly in regard to design, supervision of construction and installation, and commission where applicable.

7.2 The Tenderer shall submit a certificate with the tender certifying compliance with all these requirements in connection with the preparation and submission of the tender and shall give an undertaking to comply in full during the contract period. Where applicable the Tenderer shall submit at the time of tendering the name(s), qualifications and address(es) of the Professional Engineer(s) responsible for the various disciplines and portions of the work comprising this contract.

8.0 NON-COMPLIANCE

8.1 The Employer in this contract will not under any circumstances be, or become party to, any act or omission by the Contractor and/or the Contractor's Sub-contractors and/or employees, which contravenes South African law.

8.2 Notwithstanding anything to the contrary in this tender document, and in addition to any other remedies the Council may have, if at any time during this contract, the Council discover any contravention of the laws expressly mentioned herein or any other applicable law, then the Council shall have the right to cancel this contract forthwith. In such event, the Council shall not be liable for any loss or damages caused by such cancellation.

THE MSUNDUZI MUNICIPALITY

SUPPLY AND DELIVERY CONTRACT No. E18 OF 2026

ANNUAL SUPPLY AND DELIVERY OF CONSUMER DISTRIBUTION UNITS (CDU) AND ACCESSORIES

1.0 SCOPE OF WORK

This Contract Calls for the Supply and Delivery of Consumer Distribution Unit and accessories in line with the requirements of the technical specifications, as and when required.

2.0 DETAIL SPECIFICATION

2.1 ITEM 1: FREE STANDING POLYETHYLENE OR GLASS REINFORCED POLYESTER SQUARE CONSUMER DISTRIBUTION UNIT (CDU)

Refer to drawings PSN 100A to PSN 100E

The weatherproof consumer distribution units shall be made of glass reinforced polyester which shall comply in all respects with the latest revision of SANS Specification 141 - 1971 for Type S Laminated Products that are resistant to prolonged contact with soil and moisture. The gel coat shall be pigmented to a colour which is an acceptable match to colour No. C37 Light Stone of SANS1091.

2.1.1 **EXTERIOR SURFACE**

The gel coat shall be Crystic Gelcoat 65 PA4 and pigmented to the raw material manufacturer's specification and shall be of uniform thickness as per Clause 3.2 of SANS 141. The gel coat shall be backed by one layer of surface tissue.

2.1.2 LAMINATE **THICKNESS**

The laminate will consist of 3 layers of 450 g/sq m strand mat bound with Crystic 7256 PS for general purpose orthophthalic polyestic resin that contains no fillers or dilutants. The resin to glass ratio shall not be less than 2,5:1 and not more than 3:1. The laminate shall be of uniform thickness throughout and shall have a smooth finish externally. **All edges of the trimmed and drilled laminate are to be sealed with resin to prevent ingress of moisture.**

2.1.3 FRAMEWORK (****Refer to drawing PSN 100C**)**

The internal framework shall be hot dipped galvanised in accordance with SANS 763 or latest revision thereof. This galvanising shall be done on completion of all fabrication of the framework. All set screws, nuts and bolts, spring washers used assembly of CDU must be of stainless steel unless otherwise stated. Backing board to be 10mm thick plywood and to include a DIN rail to accommodate up to six (6) circuit breakers.

2.1.4 STUDBAR (****Refer to drawing PSN 100E**)**

The cdu busbars to be manufactured from 10mm thick Tufnol. The busbar to have three brass studs for the phases and one stainless steel stud for the neutral. All studs to have three nuts and two washers on either side of the busbar. A braided copper link, with 12mm copper lugs crimped on each end, capable of carrying a current of 200A shall be installed on the neutral stud as indicated on drawing

2.1.5 INTERNAL **CONSTRUCTION**

The internal construction of the unit required for terminating and supporting the cables shall be In accordance with **Drawing No's PSN 100A to PSN 100E**. As indicated on the Drawings, brass studs shall be used for the phase connections but a stainless-steel stud shall be used for the neutral connection. A copper link capable of carrying a current of 200A continuously shall be installed onto the neutral stud, as indicated on the Drawings. The link shall be the copper braid type having 12mm copper lugs crimped on each end. **THE busbars are to be manufactured from 10mm Tufnol.**

2.1.6 **METAL FASTENINGS AND CATCHES**

Metal fastenings and catches shall be non-corrodible material. The fastenings for the locking mechanism that are secured to the cover mechanism must not be moulded into the cover and have no visible fastening devices on the exterior.

2.1.7 VENTILATION

The ventilation holes or louvres shall be so designed that it will be impossible to push wire through them into the interior of the kiosk, and must prevent the entry of vermin.

2.1.8 DANGER **NOTICE**

A triangular danger notice in accordance with SANS 1186 - 1978 Type WW7, as shown on the Drawings, is to be moulded into the front door, visible from at least 2 meters away.

2.2 ITEM 2: FREE STANDING GLASS REINFORCED POLYESTER SLIM LINE CONSUMER DISTRIBUTION UNIT (SLIM CDU)

Refer to drawings PSN 100F to PSN 100G

The weatherproof consumer distribution units shall be made of glass reinforced polyester which shall comply in all respects with the latest revision of SANS Specification 141 - 1971 for Type S Laminated Products that are resistant to prolonged contact with soil and moisture. The gel coat shall be pigmented to a colour which is an acceptable match to colour No. C37 Light Stone of SANS 1091.

2.2.1 **EXTERIOR SURFACE**

The gel coat shall be Crystic Gelcoat 65 PA4 and pigmented to the raw material manufacturer's specification and shall be of uniform thickness as per Clause 3.2 of SANS 141. The gel coat shall be backed by one layer of surface tissue.

2.2.2 **LAMINATE THICKNESS**

The laminate will consist of 3 layers of 450 g/sq m strand mat bound with Crystic 7256 PS for general purpose orthophthalic polyestic resin that contains no fillers or dilutants. The resin to glass ratio shall not be less than 2,5:1 and not more than 3:1. The laminate shall be of uniform thickness throughout and shall have a smooth finish externally. **All edges of the trimmed and drilled laminate are to be sealed with resin to prevent ingress of moisture.** Tenderers must state the mass of the unit cover and of the combined unit inclusive of the internal structure.

2.2.3 **FRAMEWORK**

The internal framework shall be hot dipped galvanised in accordance with SANS 763 or latest revision thereof. This galvanising shall be done on completion of all fabrication of the framework. All set screws, nuts and bolts, spring washers used assembly of CDU must be of stainless steel unless otherwise stated.

2.2.4 **STUDBAR (**Refer to drawing PSN 100E**)**

The cdu busbars to be manufactured from 10mm thick Tufnol. The busbar to have three brass studs for the phases and one stainless steel stud for the neutral. All studs to have three nuts and two washers on either side of the busbar. A braided copper link, with 12mm copper lugs crimped on each end, capable of carrying a current of 200A shall be installed on the neutral stud as indicated on drawing.

2.2.5 **METAL FASTENINGS AND CATCHES**

Metal fastenings and catches shall be non-corrodible material. The fastenings for the locking mechanism that are secured to the cover mechanism must not be visible from the exterior.

2.2.6 **VENTILATION**

The ventilation holes or louvres shall be so designed that it will be impossible to push wire through them into the interior of the kiosk, and must prevent the entry of vermin.

2.2.7 **DANGER NOTICE**

A triangular danger notice in accordance with SANS 1186 - 1978 Type WW7, shown on the Drawings, is to be moulded into the front door to be visible from at least 2 m away.

2.3 ITEM 3: GLASS REINFORCED POLYESTER MINIATURE CDU (MOWER BOX)

****Refer to drawing PSN 100H****

The weather-proof consumer distribution units known as miniature CDUs shall be made of glass reinforced polyester which shall comply in all respects with the latest revision of SANS Specification 141 - 1971 for Type S Laminated Products that are resistant to prolonged contact with soil and moisture. The gel coat shall be pigmented to a colour which is an acceptable match to colour Mid Brunswick green.

2.3.1 **INTERNAL CONSTRUCTION**

The internal construction of the unit required for terminating and supporting the cables shall be in accordance with **Drawing PSN 100H**. As indicated on the Drawings, Masonite mounting board for clip tray or din rail, Pre-punched gland plates.

2.3.2 **METAL FASTENINGS AND CATCH**

Metal fastenings and catches shall be non-corrodible material.

2.3.3 **DANGER NOTICE**

A trilingual danger notice in accordance with SANS 1186 - 1978 Type WW7, as shown on the Drawings, is to be moulded into the front door

3.0 PROJECT CHAMPION

For any **technical related enquiries regarding these specifications**, Tenderers must contact the following Project Champion:

Name : Poovan Naidoo
Email address : poovan.naidoo@msunduzi.gov.za
Contact details : 076 481 8418

4.0 CONTRACT PERIOD

The contract period shall be 36 months from the date of appointment.

5.0 PLACE OF DELIVERY AND DELIVERY PERIOD

Delivery shall be made to the Msunduzi Municipality Central Stores, 02 Abattoir Road, Pietermaritzburg within seven (7) days of an official Order being placed.
Failure to abide by delivery period will result in penalties being charged for late delivery. Refer to clause 8 below.
The supplier shall be responsible for all damages or breakages in transit until the materials have been accepted by the Storeman at the delivery site.

6.0 SAMPLES

Samples are required for every item being tendered for. Samples are to be clearly marked by item number and supplier name by means of a tag attached to the item.
Samples not clearly marked will not be accepted and item tendered will be disqualified.

All samples submitted by the tenderers will be retained by the Msunduzi Municipality until the adjudication process has been completed.
All samples submitted by the successful tenderers will be retained by the Msunduzi Municipality

General Stores until expiry date of the contract.
Samples are to be delivered to the Electricity Department workshops situated at 111 Havelock Rd for the attention of the Manager Underground Mains.

The samples will be accepted between 08h00 and 16h00 weekdays until the date and time of the close of tender.

Tenderers who do not submit samples timeously or who do not submit any Samples, their tender will be disqualified.

Tenderers will only be evaluated on the specific samples submitted. Tendered prices for items where no samples were delivered will be liable for rejection.

The attached check list must be completed and will also be used as an evaluation tool.

7.0 INSURANCES REQUIRED

Public Liability Insurance to the value of R 1 million for any single claim for the period of the contract.

8.0 PENALTIES

Failure to deliver within 14 days of receiving an official Purchase Order, a penalty of 0.1% per calendar day of the order value including VAT will be imposed.

9.0 COMPLIANCE WITH ANY LEGISLATION, BYLAWS, ETC.

All works to be undertaken under the Contract shall be compliant in accordance and/or governed by:-

9.1 The Occupational, Health and Safety Act (Act № 85 of 1993) (OHS Act).
9.2 The Labour Relations Act (Act 66 of 1995)
9.3 The Compensation for Occupational Injuries and Diseases (COID) Act (Act № 130 of 1993).
9.4 The Basic Conditions of Employment Act (Act № 3 of 1983) (BCE Act).
9.5 The Income Tax Act (Act № 58 of 1962).
9.6 The Value Added Tax Act (Act № 89 of 1991).
9.7 SABS / SANS / IEC Standards
9.8 SCM Policies

10.0 GUARANTEE/WARRANTY/DEFECTS LIABILITY PERIOD

A 12 month guarantee / shelf life were applicable is required.

11.0 INSPECTION OF CONTRACTOR'S PREMISES

Not applicable

12.0 ESCALATION

SEIFSA Indices

13.0 MATERIALS

All Items to conform to equivalent standards as listed under Paragraph 6: Detailed Specifications were applicable.

14.0 DRAWINGS

Tenderers must refer to the attached drawings PSN 100A to PSN 100H. Pictures are for Illustration purposes only, and the actual product may vary in physical appearance as per manufacturer enhancements.
Drawings are supplied – PSN 100A to PSN 100H as attached.
ANNEXURE H

15.0 ANY OTHER IMPORTANT INFORMATION

15.1 Msunduzi Municipality will enter into a Service Level Agreement (SLA) with the successful service providers.

15.2 Msunduzi Municipality reserves the right to verify all information submitted.

15.3 The Msunduzi Municipality reserves the right to award this tender to more than one tenderer in order of preference.

15.4 The Msunduzi Municipality reserves the right to award this tender in full or in part per item.

16.0 MANDATORY REQUIREMENTS

Not applicable

17.0 EVALUATION CRITERIA

17.1 **Assessment of samples as per attached check list. The bidders samples who have met the required specifications will proceed to the next stage of evaluation.**

17.2 In terms of regulation 6 of the Preferential Procurement Regulations pertaining to the Preferential Procurement Policy Framework Act, 2000 (Act 5 of 2000) as amended and approved in 2022, responsive bids will be adjudicated by the Municipality on the 80/20 Specific goals system in terms of which points are awarded to bidders on the basis of: The bid price (maximum 80 points), Specific goals (maximum 20 points)

Item No.	CRITERIA	BASIS OF POINTS ALLOCATION	CLAIMABLE POINTS	VERIFICATION DOCUMENT (Signed references with contact details)
1.	**Black Owned Enterprise (BOE)"**	Black Owned Enterprise (BOE)" in this context refers to a "black-owned enterprise" with at least 51% South African black ownership and/or more than 51% management control by South African black people	10 Points	Companies and Intellectual Property Commission (CIPC) OR Central Supplier Database (CSD)
2.	**Business Enterprises owned by Women**	A woman-owned business that is a continuing, independent, for profit business which performs a commercially useful function, and is at least fifty-one percent (**51%**) owned and controlled by one or more women; or, in the case of any publicly owned business, at least fifty-one percent (**51%**) of the stock of which is owned and controlled by	5 Points	Companies and Intellectual Property Commission (CIPC) OR Central Supplier Database (CSD)

		one (1) or more women and whose management and daily business operations are under the control of one (1) or more women.		
3.	**Location of a Business Enterprise**	means Business location is defined as a place or structure occupied by a firm or enterprise to run its operations. This includes any structure or establishment used in conducting a business within the Msunduzi municipality jurisdiction	5 Points	Utility Bill or Lease agreement document

THE MSUNDUZI MUNICIPALITY

SUPPLY AND DELIVERY CONTRACT No. E18 OF 2026

ANNUAL SUPPLY AND DELIVERY OF CONSUMER DISTRIBUTION UNITS (CDU) AND ACCESSORIES

PRICING SCHEDULE

- Prices must include for the delivery of the materials as detailed in the specifications
- The quantities in the price schedule are estimated and are not guaranteed purchasing quantity.

ITEM 1: FREE STANDING GLASS REINFORCED POLYESTER SQUARE CONSUMER DISTRIBUTION UNIT (CDU) 550mm X 550mm

Item No.	Description	Unit Price (Excl. VAT)	Estimated Annual Quantity Required
1	Supply & Delivery of Glass Reinforced Polyester CDU (complete) as per drawings PSN 100 A to 100E	**R**	**600**
1 A	Supply and Delivery of Replacement Lockable Removable Cover (Lid) only to fit Item 1.	**R**	**500**
1 B	Supply And Delivery of Replacement Stud Bar only as per drawing PSN 100E for Item 1.	**R**	**500**
1 C	Supply and Delivery of Replacement Locking Rod only as per drawing PSN 100 E for Item 1.	**R**	**100**
1 D	Replacement Masonite Panel (300mm x 300mm) including pre- mounted Din Rail.	**R**	**50**
1 E	Machined key to open Locking Rod	**R**	**60**
	Total excluding VAT for Items 1 to 1 E	**R**	
	VAT	**R**	
	Grand Total	**R**	

ITEM 2: FREE STANDING GLASS REINFORCED POLYESTER SLIM- LINE CONSUMER DISTRIBUTION UNIT (CDU) 550mm X 350mm

Item No.	Description	Unit Price (Excl. VAT)	Estimated Annual Quantity Required
2	Supply & Delivery of Glass Reinforced Polyester Slim- Line CDU (complete) as per drawings PSN 100 F to 100 G	**R**	**50**
2 A	Supply and Delivery of Replacement Lockable Removable Cover (Lid) only to fit Item 2.	**R**	**50**
2 B	Supply And Delivery of Replacement Stud Bar only as per drawing PSN 100E for Item 2.	**R**	**100**
2 C	Supply and Delivery of Replacement Locking Rod only as per drawing PSN 100 E for Item 2.	**R**	**100**
2 D	Machined key to open Locking Rod	**R**	**60**
	Total excluding VAT for Items 2 to 2 D	**R**	
	VAT	**R**	
	Grand Total	**R**	

ITEM 3: GLASS REINFORCED POLYESTER MINIATURE CDU (MOWER BOX)

Item No.	Description	Unit Price (Excl. VAT)	Estimated Annual Quantity Required
3	Supply & Delivery of Glass Reinforced Polyester Mower Box as per drawing PSN 100H	**R**	**300**
3 A	Supply and Delivery of Replacement Lockable Removable Cover (Lid) only to fit Item 2.	**R**	**200**
	Total excluding VAT for Items 3 And 3 A	**R**	
	VAT	**R**	
	Grand Total	**R**	

Note:
When submitting this tender, tenderers are advised that regardless of the VAT status of being a VAT or non VAT vendor, the price must include for VAT.

Further to the above, the price shall be deemed to be VAT inclusive regardless of whether the tenderer is a VAT vendor or not.

SIGNED ON BEHALF OF THE TENDERER:

Name of Service Provider…….

Name of Signatory:……..…

Capacity of Signatory:…….……

Signature …….. Date …….

E-mail Address……

THE MSUNDUZI MUNICIPALITY

SUPPLY AND DELIVERY CONTRACT No. E18 OF 2026

ANNUAL SUPPLY AND DELIVERY OF CONSUMER DISTRIBUTION UNITS (CDU) AND ACCESSORIES

DATA SHEET 1: INVITATION TO BID DOCUMENT

PART A

YOU ARE HEREBY INVITED TO BID FOR REQUIREMENTS OF THE MSUNDUZI MUNICIPALITY					
BID NUMBER:	SSE18 OF 2026	CLOSING DATE:	26 January 2027	CLOSING TIME:	12H00
DESCRIPTION	ANNUAL SUPPLY AND DELIVERY OF CONSUMER DISTRIBUTION UNITS (CDU) AND ACCESSORIES				
THE SUCCESSFUL TENDERER WILL BE REQUIRED TO FILL IN AND SIGN A WRITTEN CONTRACT FORM					

BID RESPONSE DOCUMENTS MUST BE DEPOSITED IN THE BID BOX AT:

Msunduzi Municipality's Central Stores
2 Abattoir Road (off Kershaw Street),
PIETERMARITZBURG 3201
3201

SUPPLIER INFORMATION				
NAME OF TENDERER				
POSTAL ADDRESS				
STREET ADDRESS				
TELEPHONE NUMBER	CODE		NUMBER	
CELLPHONE NUMBER				
FACSIMILE NUMBER	CODE		NUMBER	
E-MAIL ADDRESS				
VAT REGISTRATION NUMBER				
TAX COMPLIANCE STATUS	TCS PIN:			
CSD REGISTRATION No.	MAAA			

ARE YOU THE ACCREDITED REPRESENTATIVE **IN SOUTH AFRICA FOR THE GOODS /SERVICES /WORKS OFFERED?**	☐Yes ☐No [IF YES ENCLOSE PROOF]	ARE YOU A FOREIGN BASED SUPPLIER FOR **THE GOODS /SERVICES /WORKS OFFERED?**	☐Yes ☐No [IF YES, ANSWER PART B:3]
TOTAL NUMBER OF ITEMS OFFERED		**TOTAL BID PRICE**	**R**
SIGNATURE OF TENDERER	.....	**DATE**	
CAPACITY UNDER WHICH THIS BID IS SIGNED			

BIDDING PROCEDURE ENQUIRIES MAY BE DIRECTED TO:		**TECHNICAL INFORMATION MAY BE DIRECTED TO:**	
DEPARTMENT	SCM UNIT	CONTACT PERSONS	Poovan Naidoo
CONTACT PERSON	Phiwe Mthalane	TELEPHONE NUMBER	076 481 84187858
TELEPHONE NUMBER		CELLULAR NUMBER	n/a
FACSIMILE NUMBER	N/A	E-MAIL ADDRESS	SEE BELOW
E-MAIL ADDRESS	phiwe.mthalane@msunduzi.gov.za	poovan.naidoo@msunduzi.gov.za	

PART B

1.	**BID SUBMISSION:**
1.1.	BIDS MUST BE DELIVERED BY THE STIPULATED TIME TO THE CORRECT ADDRESS. LATE BIDS WILL NOT BE ACCEPTED FOR CONSIDERATION.
1.2.	**ALL BIDS MUST BE SUBMITTED ON THE OFFICIAL FORMS PROVIDED–(NOT TO BE RE-TYPED) OR ONLINE**
1.3.	THIS BID IS SUBJECT TO THE PREFERENTIAL PROCUREMENT POLICY FRAMEWORK ACT AND THE PREFERENTIAL PROCUREMENT REGULATIONS, 2017, THE GENERAL CONDITIONS OF CONTRACT (GCC) AND, IF APPLICABLE, ANY OTHER SPECIAL CONDITIONS OF CONTRACT.
2.	**TAX COMPLIANCE REQUIREMENTS**
2.1	TENDERERS MUST ENSURE COMPLIANCE WITH THEIR TAX OBLIGATIONS.
2.2	TENDERERS ARE REQUIRED TO SUBMIT THEIR UNIQUE PERSONAL IDENTIFICATION NUMBER (PIN) ISSUED BY SARS TO ENABLE THE ORGAN OF STATE TO VIEW THE TAXPAYER'S PROFILE AND TAX STATUS.
2.3	APPLICATION FOR THE TAX COMPLIANCE STATUS (TCS) CERTIFICATE OR PIN MAY ALSO BE MADE VIA E-FILING. IN ORDER TO USE THIS PROVISION, TAXPAYERS WILL NEED TO REGISTER WITH SARS AS E-FILERS THROUGH THE WEBSITE WWW.SARS.GOV.ZA.
2.4	FOREIGN SUPPLIERS MUST COMPLETE THE PRE-AWARD QUESTIONNAIRE IN PART B:3.
2.5	TENDERERS MAY ALSO SUBMIT A PRINTED TCS CERTIFICATE TOGETHER WITH THE BID.
2.6	IN BIDS WHERE CONSORTIA / JOINT VENTURES / SUB-CONTRACTORS ARE INVOLVED, EACH PARTY MUST SUBMIT A SEPARATE TCS CERTIFICATE / PIN / CSD NUMBER.
2.7	WHERE NO TCS IS AVAILABLE BUT THE TENDERER IS REGISTERED ON THE CENTRAL SUPPLIER DATABASE (CSD), A CSD NUMBER MUST BE PROVIDED.
3.	**QUESTIONNAIRE TO BIDDING FOREIGN SUPPLIERS**
3.1.	IS THE ENTITY A RESIDENT OF THE REPUBLIC OF SOUTH AFRICA (RSA)? ☐ YES ☐ NO
3.2.	DOES THE ENTITY HAVE A BRANCH IN THE RSA? ☐ YES ☐ NO
3.3.	DOES THE ENTITY HAVE A PERMANENT ESTABLISHMENT IN THE RSA? ☐ YES ☐ NO
3.4.	DOES THE ENTITY HAVE ANY SOURCE OF INCOME IN THE RSA? ☐ YES ☐ NO
3.5.	IS THE ENTITY LIABLE IN THE RSA FOR ANY FORM OF TAXATION? ☐ YES ☐ NO
	IF THE ANSWER IS "NO" TO ALL OF THE ABOVE, THEN IT IS NOT A REQUIREMENT TO REGISTER FOR A TAX COMPLIANCE STATUS SYSTEM PIN CODE FROM THE SOUTH AFRICAN REVENUE SERVICE (SARS) AND IF NOT REGISTER AS PER 2.3 ABOVE.

NB: FAILURE TO PROVIDE ANY OF THE ABOVE PARTICULARS MAY RENDER THE BID INVALID.
NO BIDS WILL BE CONSIDERED FROM PERSONS IN THE SERVICE OF THE STATE.

SIGNATURE OF TENDERER: ……

CAPACITY UNDER WHICH THIS BID IS SIGNED: ……

DATE: …….

THE MSUNDUZI MUNICIPALITY

SUPPLY AND DELIVERY CONTRACT No. E18 OF 2026

ANNUAL SUPPLY AND DELIVERY OF CONSUMER DISTRIBUTION UNITS (CDU) AND ACCESSORIES

DATA SHEET 2: AUTHORITY TO SIGN DOCUMENT

I/We*, the undersigned, am/are* duly authorised to sign the tender document on behalf of

.....

by virtue of the Articles of Association/Resolution of the Board of Directors*, of which a certified copy is attached, or .....

Full Name of Signatory: .....

Capacity of Signatory: .....

Signature: .....

Date: .....

Witnesses:-

(1) Full Name: .....

Signature: .....Date.....

(2) Full Name: .....

Signature: .....Date.....

* ***Delete whichever is inapplicable or complete as indicated if none are applicable.***

THE MSUNDUZI MUNICIPALITY

SUPPLY AND DELIVERY CONTRACT No. E18 OF 2026

ANNUAL SUPPLY AND DELIVERY OF CONSUMER DISTRIBUTION UNITS (CDU) AND ACCESSORIES

DATA SHEET 3 – DECLARATION OF MUNICIPAL FEES

I/We do hereby declare that the Municipal Fees of ***(Full Name of Tenderer)***

_____

_____

Is/are, as at the date of the tender closing, fully paid up, or arrangements have been concluded with the Municipality to pay the said Fees:-

DESCRIPTION	**ACCOUNT No.**
Electricity	_____
Water	_____
Rates	_____

(Attach a copy of the current Utility Bill)

I/We acknowledge that should it be found that the Municipal Fees are not up to date, the Council may take such remedial action as it required, including termination of contract, and any income due to the Contractor shall be utilised to offset any monies due to the Council.

NB: If the Contractor is leasing the premises, a copy of the Lease Agreement must be submitted for adjudication purposes.

Full Name of Signatory.....

Capacity of Signatory.....

I.D. Number.....

Duly Authorised to sign on behalf of :- .....

Physical Address.....

.....

Signature……..Date……..……

THE MSUNDUZI MUNICIPALITY

SUPPLY AND DELIVERY CONTRACT No. E18 OF 2026

ANNUAL SUPPLY AND DELIVERY OF CONSUMER DISTRIBUTION UNITS (CDU) AND ACCESSORIES

DATA SHEET 4: DECLARATION OF INTEREST

1. No bid will be accepted from persons in the service of the state[1].

2. Any person, having a kinship with persons in the service of the state, including a blood relationship, may make an offer or offers in terms of this invitation to bid. In view of possible allegations of favouritism, should the resulting bid, or part thereof, be awarded to persons connected with or related to persons in service of the state, it is required that the bidder or their authorised representative declare their position in relation to the evaluating/adjudicating authority.

3 In order to give effect to the above, the following questionnaire must be completed and submitted with the bid.

3.1 Full Name of bidder or his or her representative:……..

3.2 Identity Number: …….

3.3 Position occupied in the Company (director, trustee, shareholder[2])

……..

3.4 Company Registration Number: …….

3.5 Tax Reference Number:……

3.6 VAT Registration Number: ……

3.7 The names of all directors / trustees / shareholders members, their individual identity numbers and state employee numbers must be indicated in paragraph 4 below.

3.8 Are you presently in the service of the state? **YES / NO**

3.8.1 If yes, furnish particulars. ….……

……

[1]MSCM Regulations: "in the service of the state" means to be –
(a) a member of –
  (i) any municipal council;
  (ii) any provincial legislature; or
  (iii) the national Assembly or the national Council of provinces;
(b) a member of the board of directors of any municipal entity;
(c) an official of any municipality or municipal entity;
(d) an employee of any national or provincial department, national or provincial public entity or constitutional institution within the meaning of the Public Finance Management Act, 1999 (Act No.1 of 1999);

(e) a member of the accounting authority of any national or provincial public entity; or
(f) an employee of Parliament or a provincial legislature.

² Shareholder" means a person who owns shares in the company and is actively involved in the management of the company or business and exercises control over the company.

3.9 Have you been in the service of the state for the past twelve months? **YES/ NO**

3.9.1 If yes, furnish particulars……..……..

…….

3.10 Do you have any relationship (family, friend, other) with persons in the service of the state and who may be involved with the evaluation and or adjudication of this bid? **YES/ NO**

3.10.1 If yes, furnish particulars……

……

3.11 Are you, aware of any relationship (family, friend, other) between any other bidder and any persons in the service of the state who may be involved with the evaluation and or adjudication of this bid? **YES / NO**

3.11.1 If yes, furnish particulars……

…….....

3.12 Are any of the company's directors, trustees, managers, principle shareholders or stakeholders in service of the state? **YES/ NO**

3.12.1 If yes, furnish particulars.…….

3.13 Are any spouse, child or parent of the company's directors, trustees, managers, principle shareholders or stakeholders in service of the state? **YES / NO**

3.13.1 If yes, furnish particulars.…….

3.14 Do you or any of the directors, trustees, managers, principle shareholders, or stakeholders of this company have any interest in any other related companies or business whether or not they are bidding for this contract? **YES / NO**

3.14.1 If yes, furnish particulars:……..

……..

4. Full details of Directors / Trustees / Members / Shareholders.

Full Name	Identity Number	State Employee Number

CERTIFICATION

I, the undersigned (Name) ……

Certify that the information furnished on this Declaration Form is correct. I accept that the state may act against me should this Declaration prove to be false.

Signature……..…Date……

THE MSUNDUZI MUNICIPALITY

SUPPLY AND DELIVERY CONTRACT No. E18 OF 2026

ANNUAL SUPPLY AND DELIVERY OF CONSUMER DISTRIBUTION UNITS (CDU) AND ACCESSORIES

DATA SHEET 5: DECLARATION OF BIDDER'S PAST SUPPLY CHAIN MANAGEMENT PRACTICES

1 This Municipal Bidding Document must form part of all bids invited.

2 It serves as a declaration to be used by municipalities and municipal entities in ensuring that when goods and services are being procured, all reasonable steps are taken to combat the abuse of the supply chain management system.

3 The bid of any bidder may be rejected if that bidder, or any of its directors have:

a. abused the municipality's / municipal entity's supply chain management system or committed any improper conduct in relation to such system;
b. been convicted for fraud or corruption during the past five years;
c. willfully neglected, reneged on or failed to comply with any government, municipal or other public sector contract during the past five years; or
d. been listed in the Register for Tender Defaulters in terms of section 29 of the Prevention and Combating of Corrupt Activities Act (No 12 of 2004).

4 In order to give effect to the above, the following questionnaire must be completed and submitted with the bid.

Item	Question	Yes	No
4.1	Is the bidder or any of its directors listed on the National Treasury's Database of Restricted Suppliers as companies or persons prohibited from doing business with the public sector? (Companies or persons who are listed on this Database were informed in writing of this restriction by the Accounting Officer/Authority of the institution that imposed the restriction after the *audi alteram partem* rule was applied). **The Database of Restricted Suppliers now resides on the National Treasury's website(www.treasury.gov.za) and can be accessed by clicking on its link at the bottom of the home page.**	Yes ☐	No ☐
4.1.1	If so, furnish particulars:		
4.2	Is the bidder or any of its directors listed on the Register for Tender Defaulters in terms of section 29 of the Prevention and Combating of Corrupt Activities Act (No 12 of 2004)? **The Register for Tender Defaulters can be accessed on the National Treasury's website (www.treasury.gov.za) by clicking on its link at the bottom of the home page.**	Yes ☐	No ☐

4.2.1	If so, furnish particulars:		
4.3	Was the bidder or any of its directors convicted by a court of law (including a court of law outside the Republic of South Africa) for fraud or corruption during the past five years?	Yes ☐	No ☐
4.3.1	If so, furnish particulars:		
4.4	Does the bidder or any of its directors owe any municipal rates and taxes or municipal charges to the municipality / municipal entity, or to any other municipality / municipal entity, that is in arrears for more than three months?	Yes ☐	No ☐
4.4.1	If so, furnish particulars:		
4.5	Was any contract between the bidder and the municipality / municipal entity or any other organ of state terminated during the past five years on account of failure to perform on or comply with the contract?	Yes ☐	No ☐
4.7.1	If so, furnish particulars:		

CERTIFICATION

I, THE UNDERSIGNED (NAME) ……

……...……

Certify That The Information Furnished On This Declaration Form Is Correct. I Accept That The State May Act Against Me Should This Declaration Prove To Be False.

Signature……..…Date…….

THE MSUNDUZI MUNICIPALITY

SUPPLY AND DELIVERY CONTRACT No. E18 OF 2026

ANNUAL SUPPLY AND DELIVERY OF CONSUMER DISTRIBUTION UNITS (CDU) AND ACCESSORIES

DATA SHEET 6: CERTIFICATE OF INDEPENDENT BID DETERMINATION

1. This Municipal Bidding Document (MBD) must form part of all bids[1] invited.

2. Section 4 (1) (b) (iii) of the Competition Act No. 89 of 1998, as amended, prohibits an agreement between, or concerted practice by, firms, or a decision by an association of firms, if it is between parties in a horizontal relationship and if it involves collusive bidding (or bid rigging).[2] Collusive bidding is a *pe se* prohibition meaning that it cannot be justified under any grounds.

3. Municipal Supply Regulation 38 (1) prescribes that a supply chain management policy must provide measures for the combating of abuse of the supply chain management system, and must enable the accounting officer, among others, to:

   a. take all reasonable steps to prevent such abuse;

   b. reject the bid of any bidder if that bidder or any of its directors has abused the supply chain management system of the municipality or municipal entity or has committed any improper conduct in relation to such system; and

   c. cancel a contract awarded to a person if the person committed any corrupt or fraudulent act during the bidding process or the execution of the contract.

4 This MBD serves as a certificate of declaration that would be used by institutions to ensure that, when bids are considered, reasonable steps are taken to prevent any form of bid-rigging.

5 In order to give effect to the above, the attached Certificate of Bid Determination (MBD 9) must be completed and submitted with the bid.

[1] Includes price quotations, advertised competitive bids, limited bids and proposals.

[2] Bid rigging (or collusive bidding) occurs when businesses, that would otherwise be expected to compete, secretly conspire to raise prices or lower the quality of goods and / or services for purchasers who wish to acquire goods and / or services through a bidding process. Bid rigging is, therefore, an agreement between competitors not to compete.

CERTIFICATE OF INDEPENDENT BID DETERMINATION

I, the undersigned, in submitting the accompanying bid:

_____

(Bid Number and Description)

in response to the invitation for the bid made by:

_____

(Name of Municipality / Municipal Entity)

do hereby make the following statements that I certify to be true and complete in every respect:

I certify, on behalf of: _____ that:

(Name of Bidder)

1. I have read and I understand the contents of this Certificate;

2. I understand that the accompanying bid will be disqualified if this Certificate is found not to be true and complete in every respect;

3. I am authorized by the bidder to sign this Certificate, and to submit the accompanying bid, on behalf of the bidder;

4. Each person whose signature appears on the accompanying bid has been authorized by the bidder to determine the terms of, and to sign, the bid, on behalf of the bidder;

5. For the purposes of this Certificate and the accompanying bid, I understand that the word "competitor" shall include any individual or organization, other than the bidder, whether or not affiliated with the bidder, who:

    (a) has been requested to submit a bid in response to this bid invitation;

    (b) could potentially submit a bid in response to this bid invitation, based on their qualifications, abilities or experience; and

    (c) provides the same goods and services as the bidder and/or is in the same line of business as the bidder

6. The bidder has arrived at the accompanying bid independently from, and without consultation, communication, agreement or arrangement with any competitor. However communication between partners in a joint venture or consortium[3] will not be construed as collusive bidding.

7. In particular, without limiting the generality of paragraphs 6 above, there has been no consultation, communication, agreement or arrangement with any competitor regarding:

    (a) prices;

    (b) geographical area where product or service will be rendered (market allocation)

    (c) methods, factors or formulas used to calculate prices;

    (d) the intention or decision to submit or not to submit, a bid;

    (e) the submission of a bid which does not meet the specifications and conditions of the bid; or

(f) bidding with the intention not to win the bid.

8. In addition, there have been no consultations, communications, agreements or arrangements with any competitor regarding the quality, quantity, specifications and conditions or delivery particulars of the products or services to which this bid invitation relates.

9. The terms of the accompanying bid have not been, and will not be, disclosed by the bidder, directly or indirectly, to any competitor, prior to the date and time of the official bid opening or of the awarding of the contract.

[3] Joint venture or Consortium means an association of persons for the purpose of combining their expertise, property, capital, efforts, skill and knowledge in an activity for the execution of a contract.

10. I am aware that, in addition and without prejudice to any other remedy provided to combat any restrictive practices related to bids and contracts, bids that are suspicious will be reported to the Competition Commission for investigation and possible imposition of administrative penalties in terms of section 59 of the Competition Act No 89 of 1998 and or may be reported to the National Prosecuting Authority (NPA) for criminal investigation and or may be restricted from conducting business with the public sector for a period not exceeding ten (10) years in terms of the Prevention and Combating of Corrupt Activities Act No 12 of 2004 or any other applicable legislation.

……	……
Signature	Date
……	……
Position	Name of Bidder

THE MSUNDUZI MUNICIPALITY

SUPPLY AND DELIVERY CONTRACT No. E18 OF 2026

ANNUAL SUPPLY AND DELIVERY OF CONSUMER DISTRIBUTION UNITS (CDU) AND ACCESSORIES

DATA SHEET 7: DECLARATION FOR PROCUREMENT ABOVE R10 MILLION (ALL APPLICABLE TAXES INCLUDED)

For all procurement expected to exceed R10 million (all applicable taxes included), bidders must complete the following questionnaire:

**** Delete if not applicable***

1.0 Are you by law required to prepare annual financial statements for auditing?

***YES / NO**

1.1 If yes, submit audited annual financial statements for the past three years or since the date of establishment if established during the past three years.

……

……

2.0 Do you have any outstanding undisputed commitments for municipal services towards any municipality for more than three months or any other service provider in respect of which payment is overdue for more than 30 days?

***YES / NO**

2.1 If no, this serves to certify that the bidder has no undisputed commitments for municipal services towards any municipality for more than three months or other service provider in respect of which payment is overdue for more than 30 days.

2.2 If yes, provide particulars.

……

……

3.0 Has any contract been awarded to you by an organ of state during the past five years, including particulars of any material non-compliance or dispute concerning the execution of such contract?

***YES / NO**

3.1 If yes, furnish particulars.

……

……

4.0 Will any portion of goods or services be sourced from outside the Republic, and, if so, what portion and whether any portion of payment from the municipality/municipal entity is expected to be transferred out of the Republic?

***YES / NO**

4.1 4.1 If yes, furnish particulars

……

……

CERTIFICATION

I, THE UNDERSIGNED (NAME) ……

CERTIFY THAT THE INFORMATION FURNISHED ON THIS DECLARATION FORM IS CORRECT.

I ACCEPT THAT THE STATE MAY ACT AGAINST ME SHOULD THIS DECLARATION PROVE TO BE FALSE.

…….……..	…….……
Signature	Date
…….....	……..……
Position	Name of Bidder

THE MSUNDUZI MUNICIPALITY

SUPPLY AND DELIVERY CONTRACT No. E18 OF 2026

ANNUAL SUPPLY AND DELIVERY OF CONSUMER DISTRIBUTION UNITS (CDU) AND ACCESSORIES

TENDER FORM

The Municipal Manager
City Hall
PIETERMARITZBURG
3201

Dear Sir

Having examined the Conditions of Tender, Specifications, Tender, Legislation and Drawings of the above contract, I/we offer to supply and deliver the whole of the said Works in conformity with the Conditions of Tender, Specifications, Tender, Legislation and Drawings, save as amended by any modifications as set out in Pricing Schedule for the period commencing from date of award **(Including VAT)** being as follows:

R_____ In Words_____

_____

_____

ITEM 1 : FREE STANDING GLASS REINFORCED POLYESTER SQUARE CONSUMER DISTRIBUTION UNIT (CDU) 550mm X 550mm	R
ITEM 2 : FREE STANDING GLASS REINFORCED POLYESTER SLIM- LINE CONSUMER DISTRIBUTION UNIT (CDU) 550mm X 350mm	R
ITEM 3 : GLASS REINFORCED POLYESTER MINIATURE CDU (MOWER BOX)	R
TOTAL	R

In the event of there being any errors of extension or addition in the Pricing Schedule, I/we agree to their being corrected, the Unit Prices being taken as correct.

I/We undertake to complete and deliver the whole of the Works comprised in the Contract within the timeframes stated.

I/We confirm that I am/we are fully acquainted with the current South African laws and regulations applicable to this contract including inter alia those laws to which my/our attention has been drawn in the Legislation Section of this document.

I/We are affiliated to _____

My/Our VAT vendor registration number is _____

I/We bank at the _____

Branch of _____

Where I/we have a _____ account.

My/Our Tender Deposit receipt number as issued by the Council is _____
(Include a copy of the Tender Deposit Receipt if purchased at the Msunduzi Municipality)

It is agreed and understood that should there be any changes on the banking details provided for the entity, a duly signed resolution by all its directors and minutes whereby a resolution for changing the banking details was passed will be submitted to Council including the original letter from the bank confirming the details.

It is agreed and understood that this tender is valid for four (4) months commencing from the closing date of the tender and that it, together with your final letter of acceptance, shall constitute a binding Contract between us.

I/We understand that the Council is not bound to accept the lowest or any tender and reserves the right to accept the whole or any part of a tender received.

I/We understand that the Council is not bound to accept the lowest or any tender and acknowledge that the Head: Supply Chain Management may, if in her absolute discretion good and sufficient grounds are brought to her attention in writing within five (5) working days from the date hereof, decline to consider my/our offer.

I/We, the undersigned, warrants that I am/We are duly authorised to do so on behalf of the enterprise, certifies that the enterprise complies with all statutory and municipal requirements and that the information supplied in terms of this documents with additional information is correct and accurate and acknowledges that if the information supplied is found to be incorrect then the Msunduzi Municipality in addition to any remedies, it may have: may:-

i Recover from the Enterprise all costs, losses or damages incurred or sustained by the Municipality as result of the award of the contract, and /or

ii Cancel the contract and claim any damages which the Municipality may suffer by having to make less favourable arrangements after such cancellations, and/or

iii Impose a penalty on the Enterprise as provided in the Tender Document, and/or

iv Take any other action as may be deemed necessary.

I/we further undertake to submit documentary proof regarding any tendering issue to the Council when so required.

Full Name of Signatory.....

Capacity of Signatory.....

I.D. Number.....

Duly Authorised to sign on behalf of.....

Physical Address.....

.....

SIGNATURE.....DATE.....

ANNEXURE "A"

THE MSUNDUZI MUNICIPALITY

SUPPLY AND DELIVERY CONTRACT No. E18 OF 2026

ANNUAL SUPPLY AND DELIVERY OF CONSUMER DISTRIBUTION UNITS (CDU) AND ACCESSORIES

ALTERATIONS BY TENDERER

Should the Tenderer desire to make any departures from or modifications to the Standard Conditions of Contract or Specification, or to qualify his/her tender in any way, he/she shall set out his/her proposals clearly hereunder or, alternatively, state them in a covering letter attached to his/her tender and referred to hereunder, failing which the tender will be deemed to be unqualified.

If no departures or modifications are desired, the Schedule hereunder is to be marked NIL and signed by the Tenderer.

PAGE	SECTION OR ITEM	PROPOSED DEPARTURE/MODIFICATION

Signature …….. Date ……..……

ANNEXURE "B"

THE MSUNDUZI MUNICIPALITY

SUPPLY AND DELIVERY CONTRACT No. E18 OF 2026

ANNUAL SUPPLY AND DELIVERY OF CONSUMER DISTRIBUTION UNITS (CDU) AND ACCESSORIES

OCCUPATIONAL HEALTH AND SAFETY ACT (ACT No. 85 OF 1993)

SECTION 37(1)

Whenever an employee does or omits to do any act which would be an offence in terms of this Act for the employer of such employee or a user to do or omit to do, then, it is proved that –

(a) in doing or omitting to do the act the employee was acting without connivance or permission of the employer or any such user;

(b) it was not under any condition or in any circumstance within the scope of the authority of the employee to do or omit to do an act, whether lawful or unlawful, of the character of the act or omission charged; and

(c) all reasonable steps were taken by the employer or any such user to prevent any act or omission of the kind in question,

the employer or any such user himself shall be presumed to have done or omitted to do that act, and shall be liable to be convicted and sentenced in respect thereof; and the fact that he issued instructions forbidding any act or omission of the kind in question shall not, in itself, be accepted as sufficient proof that he took all reasonable steps to prevent the act or omission.

SECTION 37(2)

The provisions of subsection (1) shall "mutatis mutandi" apply in the case of a mandatary of any employer or user, except if the parties have agreed in writing to the arrangements and procedures between them to ensure compliance by the mandatory with the provisions of this Act.

ACCEPTANCE BY MANDATORY

In terms of the provisions of Section 37(2) of the Occupational Health and Safety Act 85 of 1993,

I, _____

(Name of PRINCIPAL CONTRACTOR / Representative) acting for and on behalf of _____

(Name of PRINCIPAL CONTRACTOR / Company) undertake to ensure that the requirements and provisions of the Health and Safety Specifications issued by the client at the following site: _____

(Name of Site) are complied with in the following manner:

- To produce, review, monitor and enforce a Health and Safety Plan which has been approved by the Client, an Agent for the Client or a Principal Contractor;
- To include a risk assessment in the Health and Safety Plan which identifies all hazards pertaining to the project;
- To ensure that all relevant documentation required by the Occupational Health and Safety Act and Regulations, including the Construction Regulations, the Compensation for Occupational Injuries and Diseases Act as well as any other statutory laws as amended from time to time is available on site in the health and safety file;
- Enforce precautionary measures stipulated in the risk assessments.

The person signing this agreement confirms that he/she has the authority to so sign and to bind his/her employer, the said Contractor.

Signature: _____ Date: _____

(on behalf of PRINCIPAL CONTRACTOR)

Signature: _____ Date: _____

(CLIENT- Msunduzi Municipality)

Print Name: _____

(Name of CLIENT Representative)

THE MSUNDUZI MUNICIPALITY

SUPPLY AND DELIVERY CONTRACT No. E10R OF 2026

APPOINTMENT OF SERVICE PROVIDERS FOR THE SUPPLY, DELIVERY AND OFF LOADING OF FIBREGLASS LADDERS AS AND WHEN REQUIRED

PREFERENCE POINTS CLAIM FORM IN TERMS OF THE PREFERENTIAL PROCUREMENT REGULATIONS 2022

This preference form must form part of all bids invited. It contains general information and serves as a claim form for preference points for specific goals.

NB: BEFORE COMPLETING THIS FORM, BIDDERS MUST STUDY THE GENERAL CONDITIONS, DEFINITIONS AND DIRECTIVES APPLICABLE IN RESPECT OF THE TENDER AND PREFERENTIAL PROCUREMENT REGULATIONS, 2022.

---

1. GENERAL CONDITIONS

1.1 The following preference point systems are applicable to all bids:

- The 80/20 system for requirements with a Rand value of up to R50 000 000 (all applicable taxes included); and
- The 90/10 system for requirements with a Rand value above R50 000 000 (all applicable taxes included).

1.2 The value of this bid is estimated to exceed R50 000 000 (all applicable taxes included) and therefore the 90/10 Preference Point System shall be applicable.

1.3 Points for this bid shall be awarded for:

(a) Price; and

(b) Specific Goals.

1.4 The maximum points for this bid are allocated as follows:

	POINTS
PRICE	**90**
SPECIFIC GOALS	**10**
Total points for Price and Specific Goals must not exceed	**100**

1.5 Failure on the part of a bidder to submit proof or documentation required in terms of this tender to claim points for specific goals, if the bidder did not submit proof or documentation required to claim for specific goals will be interpreted to mean that preference points for specific goals are not claimed.

1.6 The organ of state reserves the right to require of a Service Provider, either before a bid is adjudicated or at any time subsequently, to substantiate any claim in regard to preferences, in any manner required by the organ of state.

2. DEFINITIONS

(a) **"Broad-Based Black Economic Empowerment Act"** means the Broad-Based Black Economic Empowerment Act, 2003 (Act No. 53 of 2003);

(b) **"EME"** means an Exempted Micro Enterprise in terms of a code of good practice on black economic empowerment issued in terms of section 9 (1) of the Broad-Based Black Economic Empowerment Act;

(c) **"Functionality"** means the ability of a Service Provider to provide goods or services in accordance with specifications as set out in the tender documents.

(d) "**highest acceptable tender"** means a tender that complies with all specifications and conditions of tender and that has the highest price compared to other tenders;

(e) **"lowest acceptable tender"** means a tender that complies with all specifications and conditions of tender and that has lowest price compared to other tenders;

(f) **"price"** means amount of money tendered for good or services, and includes all applicable taxes less all unconditional discounts;

(g) **"QSE"** means a qualifying small business enterprise in terms of a code of good practice on black economic empowerment issued in terms of section 9 (1) of the Broad-Based Black Economic Empowerment Act;

(h) **"Rand Value"** means the total estimated value of a contract in Rand, calculated at the time of bid invitation;

(i) **"specific goals"** means specific goals as contemplated in section 2(1)(d) of the Act which may include contracting with persons, or categories of persons, historically disadvantaged by unfair discrimination on the basis of race, gender and disability including the implementation of programmes of the Reconstruction and Development Programme as published in Government Gazette No. 16085 dated 23 November 1994;

(j) **"tender"** means a written offer in the form determined by an organ of state in response to an invitation to provide goods or services through price quotations, competitive tendering process or any other method envisaged in legislation;

(k) **"tender for income-generating contracts"** means a written offer in the form determined by an organ of state in response to an invitation for the origination of income-generating contracts through any method envisaged in legislation that will result in a legal agreement between the organ of state and a third party that produces revenue for the organ of state, and includes, but is not limited to, leasing and disposal of assets and concession contracts, excluding direct sales and disposal of assets through public auctions;

3. FORMULAE FOR PROCUREMENT OF GOODS AND SERVICES

3.1 POINTS AWARDED FOR PRICE

3.1.1 THE 80/20 OR 90/10 PREFERENCE POINT SYSTEMS

A maximum of 80 or 90 points is allocated for price on the following basis:

80/20 **or** **90/10**

$$Ps = 80\left(1 - \frac{Pt - P\min}{P\min}\right) \quad \text{or} \quad Ps = 90\left(1 - \frac{Pt - P\min}{P\min}\right)$$

Where: -

Ps = Points scored for price of bid under consideration
Pt = Price of bid under consideration
Pmin = Price of lowest acceptable bid

3.2 FORMULAE FOR DISPOSAL OR LEASING OF STATE ASSETS AND INCOME GENERATING PROCUREMENT

3.2.1 POINTS AWARDED FOR PRICE

A maximum of 80 or 90 points is allocated for price on the following basis:

80/20 **or** **90/10**

$$Ps = 80\left(1 + \frac{Pt - P\max}{P\max}\right) \quad \text{or} \quad Ps = 90\left(1 + \frac{Pt - P\max}{P\max}\right)$$

Where: -

Ps = Points scored for price of bid under consideration
Pt = Price of bid under consideration
Pmax = Price of highest acceptable tender

4. POINTS AWARDED FOR SPECIFIC GOALS

4.1 In terms of Regulation 4(2); 5(2); 6(2) and 7(2) of the Preferential Procurement Regulations, preference points must be awarded for specific goals stated in the tender.

4.2 For the purpose of this tender points will be allocated in accordance with the specific goals as outlined in the Tender Document specification contained herein and must be supported by proof /documentation as stated therein.

4.3 In cases where organs of state intend to use Regulation 3(2) of the Regulations, which states that, if it is unclear whether the 80/20 or 90/10 preference point system applies, an organ of state must, in the tender documents, stipulate in the case of—

(a) an invitation for tender for income-generating contracts, that either the 80/20 or 90/10 preference point system will apply and that the highest acceptable tender will be used to determine the applicable preference point system; or

(b) any other invitation for tender, that either the 80/20 or 90/10 preference point system will apply and that the lowest acceptable tender will be used to determine the applicable preference point system, then the organ of state must indicate the points allocated for specific goals for both the 90/10 and 80/20 preference point system.

5. SUB-CONTRACTING

5.1 Will any portion of the contract be sub-contracted?

(***Tick applicable box***)

YES		NO	

5.1.1 If yes, indicate:

i) What percentage of the contract will be subcontracted.....……%?

ii) The name of the sub-contractor……

……

iii) Whether the sub-contractor is an EME or QSE

(Tick applicable box)

YES		NO	

iv) Specify, by ticking the appropriate box, if subcontracting with an enterprise in terms of Preferential Procurement Regulations,2022:

Designated Group: An EME or QSE which is at last 51% owned by:	**EME √**	**QSE √**
Black people		
Black people who are youth		
Black people who are women		
Black people with disabilities		
Black people living in rural or underdeveloped areas or townships		
Co-operative owned by black people		
Black people who are military veterans		
OR		
Msunduzi EME		
Msunduzi Manufacturing Enterprise		
Location of a Business Enterprise		

6. DECLARATION WITH REGARD TO COMPANY/FIRM

6.1 Name of company/firm…….

6.2 VAT registration number……

6.3 Company registration number……

6.4 TYPE OF COMPANY/ FIRM

- ☐ Partnership/Joint Venture / Consortium
- ☐ One-person business/sole propriety
- ☐ Close corporation
- ☐ Company
- ☐ (Pty) Limited
- ☐ Non-Profit Company

[TICK APPLICABLE BOX]

6.5 DESCRIBE PRINCIPAL BUSINESS ACTIVITIES

……
……
……

6.6 COMPANY CLASSIFICATION *[TICK APPLICABLE BOX]*

- ☐ Manufacturer
- ☐ Supplier
- ☐ Professional Service Provider
- ☐ Other Service Providers, e.g. transporter, etc.

6.7 MUNICIPAL INFORMATION

Municipality where business is situated…..……..……

Registered Account Number: ……...……

Stand Number: ……...……

6.8 Total number of years the company/firm has been in business……

6.9 I/we, the undersigned, who is / are duly authorised to do so on behalf of the company/firm, certify that the points claimed, based on specific goals as advised in the tender, qualifies the company/ firm for the preference(s) shown and I / we acknowledge that:

i) The information furnished is true and correct;

ii) The preference points claimed are in accordance with the General Conditions as indicated in paragraph 1 of this form;

iii) In the event of a contract being awarded as a result of points claimed as shown in paragraphs 1.4 and 5.2, the contractor may be required to furnish documentary proof to the satisfaction of the purchaser that the claims are correct;

iv) If the specific goals have been claimed or obtained on a fraudulent basis or any of the conditions of contract have not been fulfilled, the purchaser may, in addition to any other remedy it may have –

(a) disqualify the person from the bidding process;

(b) recover costs, losses or damages it has incurred or suffered as a result of that person's conduct;

(c) cancel the contract and claim any damages which it has suffered as a result of having to make less favourable arrangements due to such cancellation;

(d) recommend that the bidder or contractor, its shareholders and directors, or only the shareholders and directors who acted on a fraudulent basis, be restricted by the National Treasury from obtaining business from any organ of state for a period not exceeding 10 years, after the *audi alteram partem* (hear the other side) rule has been applied; and

(e) forward the matter for criminal prosecution.

WITNESSES: 1……..…… 2.…….....……

SIGNATURE(S) OF BIDDER(S)……. DATE: …….....

ADDRESS: ….....……...

.....……

THE MSUNDUZI MUNICIPALITY

SUPPLY AND DELIVERY CONTRACT No. E18 OF 2026

ANNUAL SUPPLY AND DELIVERY OF CONSUMER DISTRIBUTION UNITS (CDU) AND ACCESSORIES

TAX CLEARANCE CERTIFICATE

Tenderers are required to attach hereto a Valid Tax Clearance Certificate, and a Tax Compliance Status Verification Pin issued by SARS as required in terms of Regulation 16 of the Preferential Procurement Regulations, 2001 for adjudication purposes.

THE MSUNDUZI MUNICIPALITY

SUPPLY AND DELIVERY CONTRACT No. E18 OF 2026

ANNUAL SUPPLY AND DELIVERY OF CONSUMER DISTRIBUTION UNITS (CDU) AND ACCESSORIES

CIPC REGISTRATION CERTIFICATE

Tenderers are required to attach hereto proof of registration with the Companies and Intellectual Property Commission (CIPC) for adjudication purposes.

THE MSUNDUZI MUNICIPALITY

SUPPLY AND DELIVERY CONTRACT No. E18 OF 2026

ANNUAL SUPPLY AND DELIVERY OF CONSUMER DISTRIBUTION UNITS (CDU) AND ACCESSORIES

CENTRAL SUPPLIER DATABASE (CSD) REGISTRATION REPORT

Tenderers are required to attach hereto proof of registration with the Central Supplier Database (CSD).

A full Report is required for adjudication purposes.

THE MSUNDUZI MUNICIPALITY

SUPPLY AND DELIVERY CONTRACT No. E18 OF 2026

ANNUAL SUPPLY AND DELIVERY OF CONSUMER DISTRIBUTION UNITS (CDU) AND ACCESSORIES

COMPACT DISC (CD) OR USB-FLASH DRIVE

Tenderers are required to attach hereto a scanned copy of the completed tender document on either a Compact Disc (CD) or USB-Flash Drive for adjudication purposes.

The Compact Disc (CD) or USB-Flash Drive must be submitted in a sealed envelope and attached hereto.

SIGNED ON BEHALF OF THE SERVICE PROVIDER:

Name of Service Provider ……..

Name of Signatory: ……..…

Capacity of Signatory: ……

Signature …….. Date …….

All literature and attachments submitted must be securely attached to the tender. The Council shall not be held liable for any loss or damages sustained due to the Tenderer's failure to comply with this condition.

ANNEXURE "H"

THE MSUNDUZI MUNICIPALITY

SUPPLY AND DELIVERY CONTRACT No. E18 OF 2026

ANNUAL SUPPLY AND DELIVERY OF CONSUMER DISTRIBUTION UNITS (CDU) AND ACCESSORIES

DRAWINGS

ITEM 1

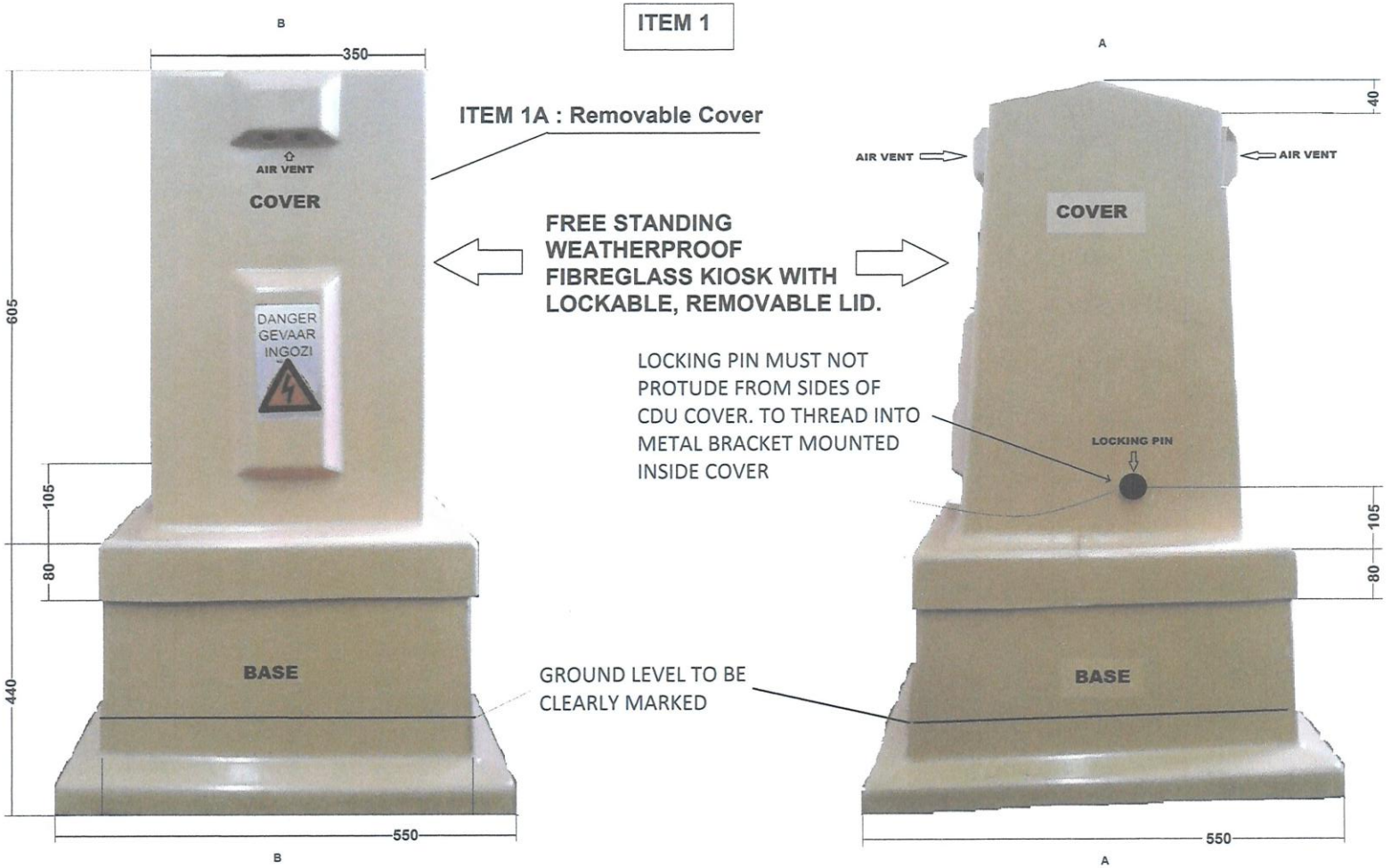

FRONT VIEW **SIDE VIEW**

	SIGN:	DATE:
DRAWN:	POOVAN NAIDOO	31/01/2017
CHECK:		
TECH:		
SM:		
BMO:		

	SIGN:	DATE:
	APPROVED	31/1/17
NOT TO SCALE	MAP REFERENCE:	
DRAWING No.	PSN 100A	

MSUNDUZI MUNICIPALITY
ELECTRICITY SUB-UNIT

STANDARD CONSUMER DISTRIBUTION UNIT (550 X 550mm)

ITEM 1

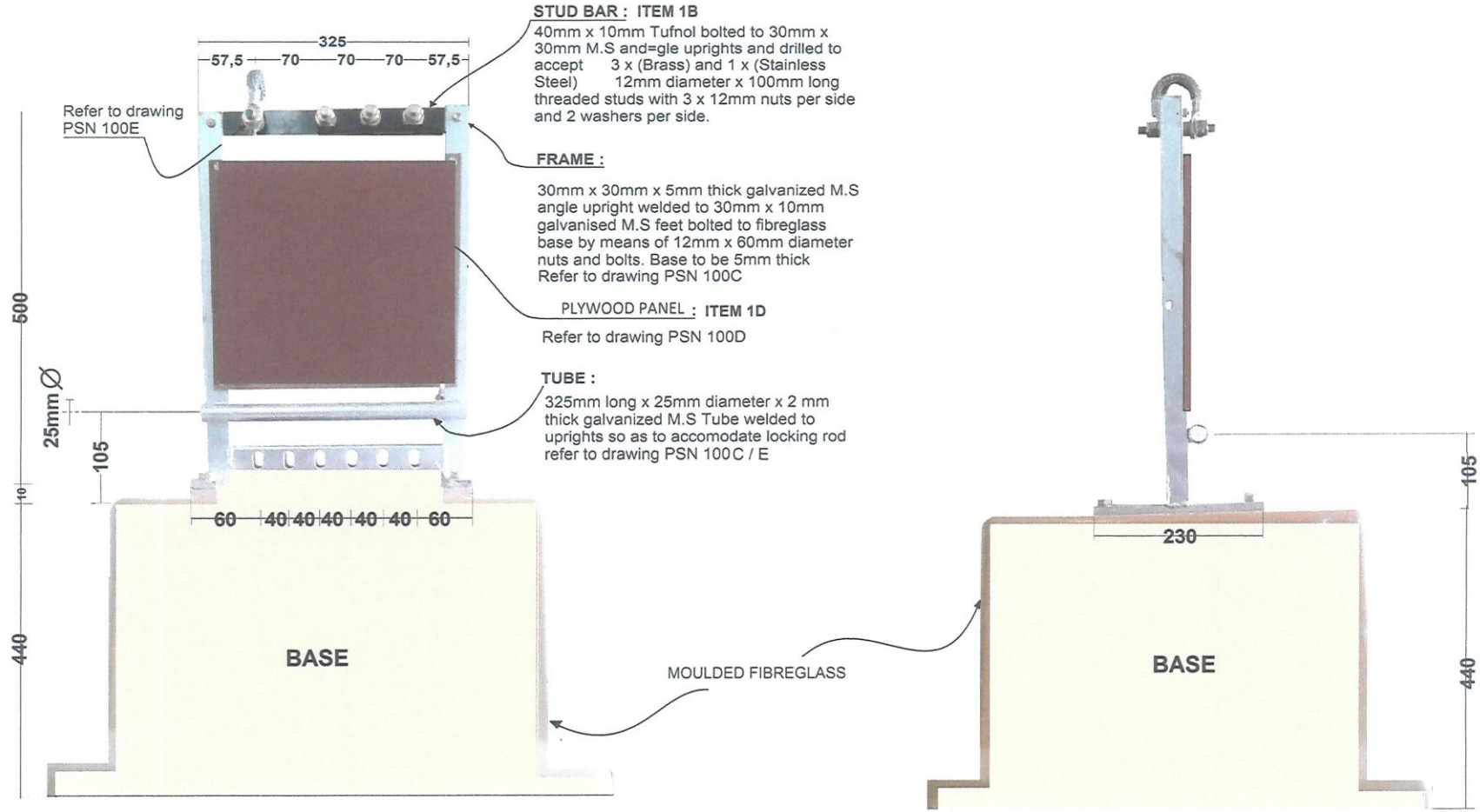

STUD BAR : ITEM 1B

40mm x 10mm Tufnol bolted to 30mm x 30mm M.S and=gle uprights and drilled to accept 3 x (Brass) and 1 x (Stainless Steel) 12mm diameter x 100mm long threaded studs with 3 x 12mm nuts per side and 2 washers per side.

FRAME :

30mm x 30mm x 5mm thick galvanized M.S angle upright welded to 30mm x 10mm galvanised M.S feet bolted to fibreglass base by means of 12mm x 60mm diameter nuts and bolts. Base to be 5mm thick Refer to drawing PSN 100C

PLYWOOD PANEL : **ITEM 1D**

Refer to drawing PSN 100D

TUBE :

325mm long x 25mm diameter x 2 mm thick galvanized M.S Tube welded to uprights so as to accomodate locking rod refer to drawing PSN 100C / E

SECTION A-A (COVER REMOVED)

SECTION B-B (COVER REMOVED

	SIGN:	DATE:
DRAWN:	POOVAN NAIDOO	31/01/2017
CHECK:		
TECH:		
SM:		
BMO:		

	SIGN:	DATE:
	IP Sinclair APPROVED	31/7/17
NOT TO SCALE	MAP REFERENCE:	
DRAWING No.	PSN 100B	

MSUNDUZI MUNICIPALITY
ELECTRICITY SUB-UNIT

STANDARD CONSUMER DISTRIBUTION UNIT (550 X 550mm)

ITEM 1

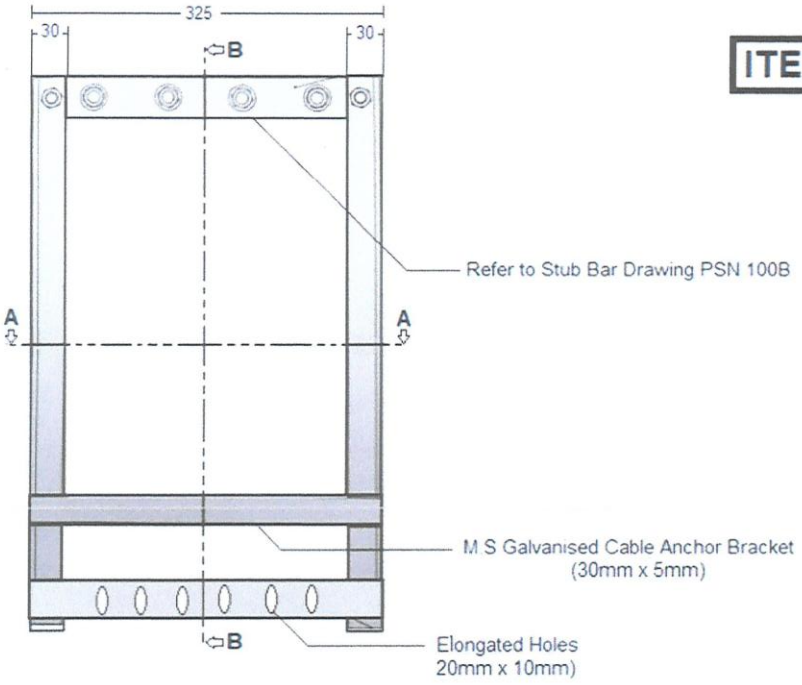

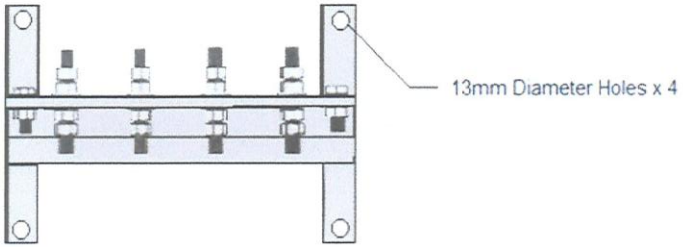

TOP VIEW

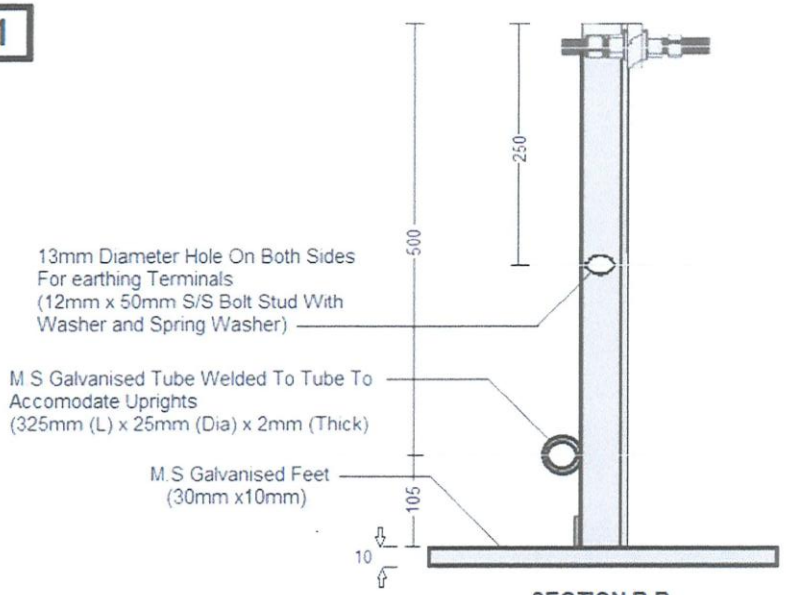

SECTION B-B

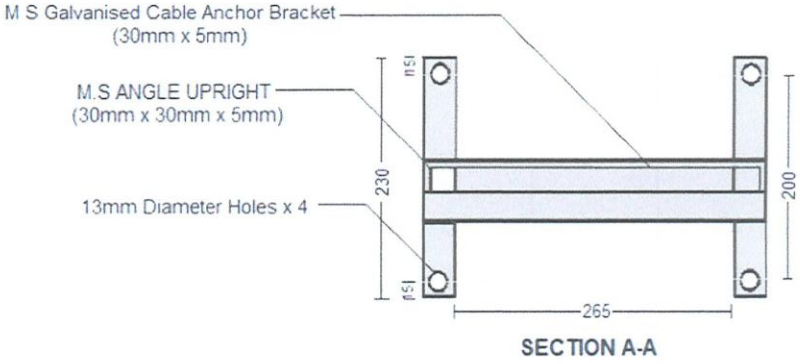

SECTION A-A

	SIGN:	DATE:
DRAWN:	POOVAN NAIDOO	31/01/2017
CHECK:		
TECH:		
SM:		
BMO:		

	SIGN:	DATE:
	IP Sinclair APPROVED	31/1/17
NOT TO SCALE	MAP REFERENCE:	
DRAWING No.	PSN 100C	

MSUNDUZI MUNICIPALITY
ELECTRICITY SUB-UNIT

STANDARD CONSUMER DISTRIBUTION UNIT (550 X 550mm)

ITEM 1 : 1D

STUD BAR : ITEM 1B
Refer to Drawing PSN 100E

FRAME
Refer to Drawing PSN 100C

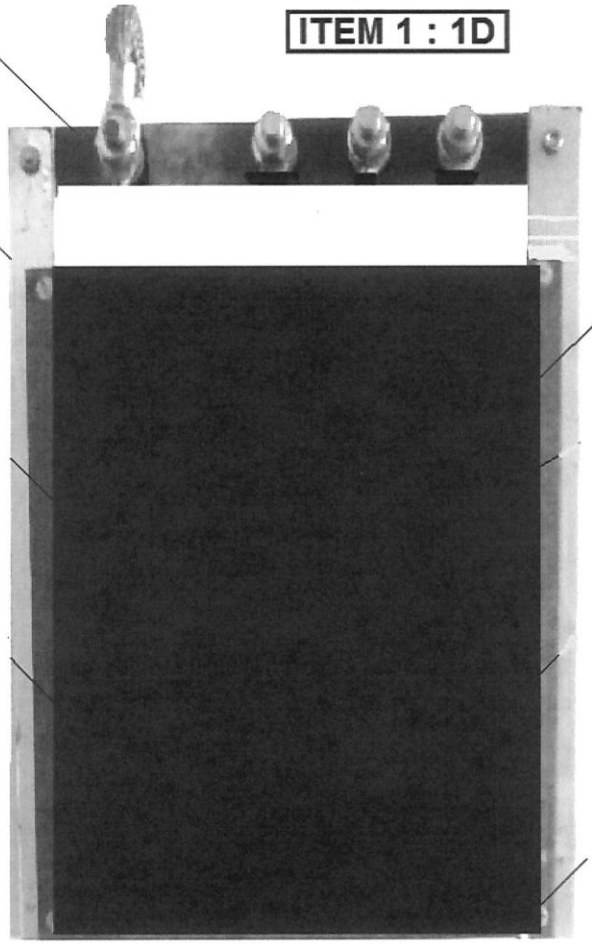

300mm x 300mm
10mm thick plywood or equivalent

PLYWOOD PANEL

	SIGN:	DATE:
DRAWN:	POOVAN NAIDOO	31/01/2017
CHECK:		
TECH:		
SM:		
BMO:		

	SIGN:	DATE:
	PS W APPROVED	31/7/17
NOT TO SCALE	MAP REFERENCE:	
DRAWING No.	PSN 100D	

MSUNDUZI MUNICIPALITY
ELECTRICITY SUB-UNIT
STANDARD CONSUMER DISTRIBUTION UNIT (550 X 550mm)

ITEM 1

To be manufactured from Sheet moulding compound, thermally set mix of resin, fibre and fillers or equivalent

MUST NOT BE METALLIC

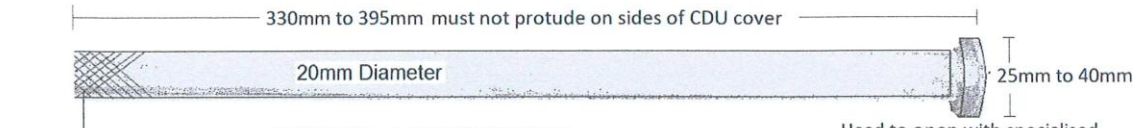

ITEM 1C : LOCKING ROD

threaded end to thread into CDU cover
No padlocking facility

Head to open with specialised tool or a machined key tool

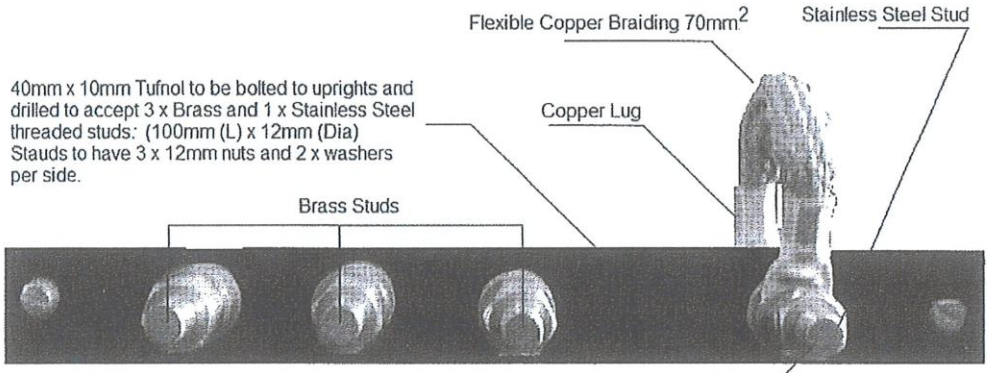

ITEM 1B : STUD BAR

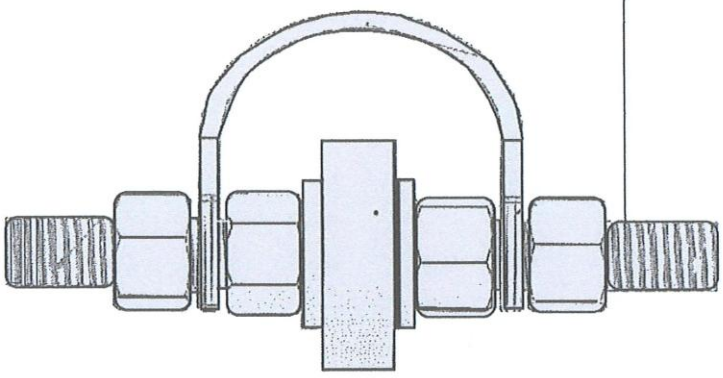

THREADED STUD

	SIGN: APPROVED	DATE: 31/7/17	MSUNDUZI MUNICIPALITY ELECTRICITY SUB-UNIT
NOT TO SCALE	MAP REFERENCE:		STANDARD CONSUMER DISTRIBUTION UNIT (550 X 550mm)
DRAWING No.	PSN 100 E		

ITEM 2

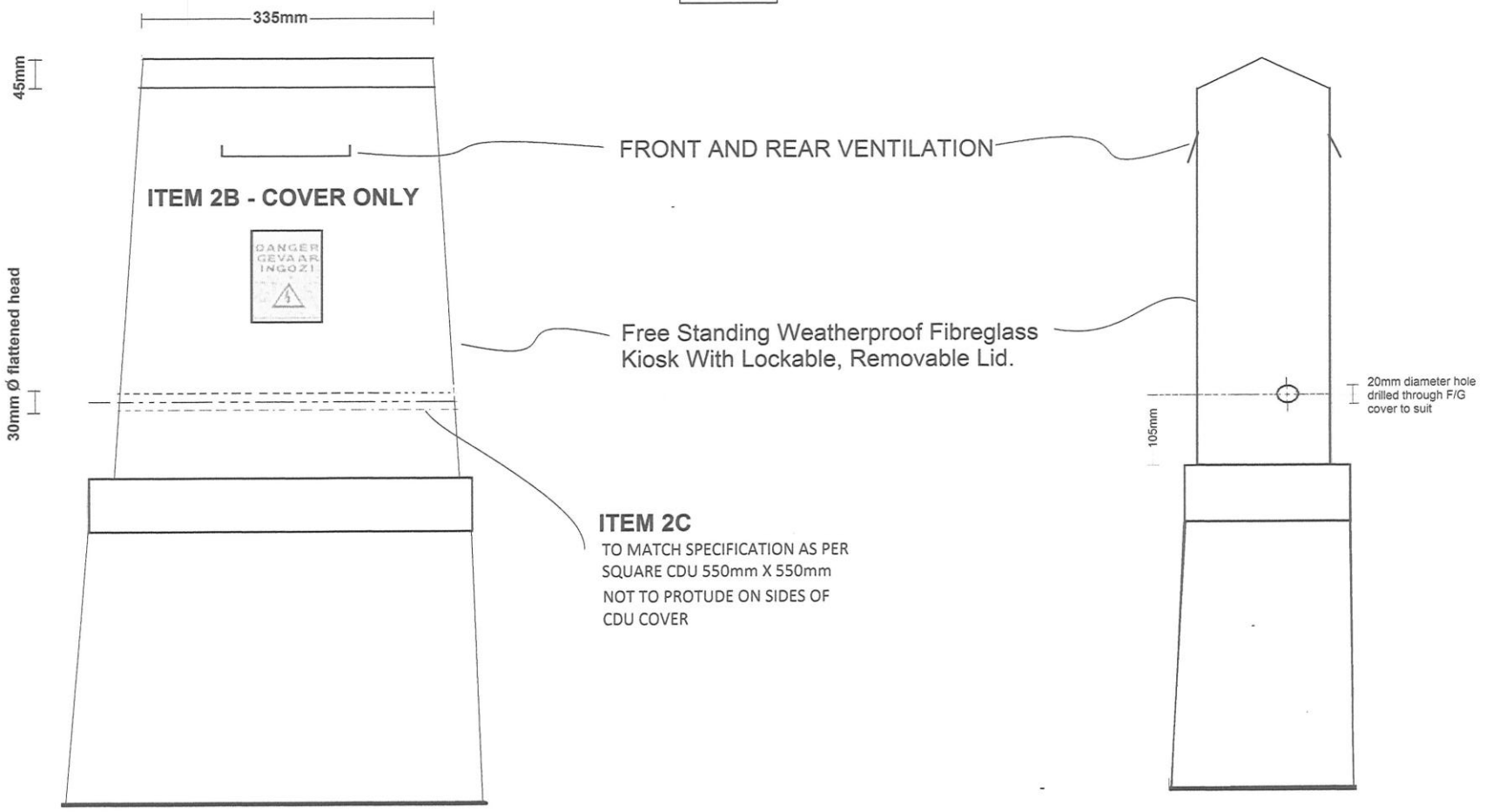

FRONT ELEVATION

SIDE ELEVATION

	SIGN:	DATE:
DRAWN:	POOVAN NAIDOO	31/01/2017
CHECK:		
TECH:		
SM:		
BMO:		

	SIGN:	DATE:
	PSuec	31/7/17
	APPROVED	
NOT TO SCALE	MAP REFERENCE:	
DRAWING No.	PSN 100F	

MSUNDUZI MUNICIPALITY
ELECTRICITY SUB-UNIT

SLIM-LINE CONSUMER DISTRIBUTION UNIT (300mm x 550mm)

ITEM 2

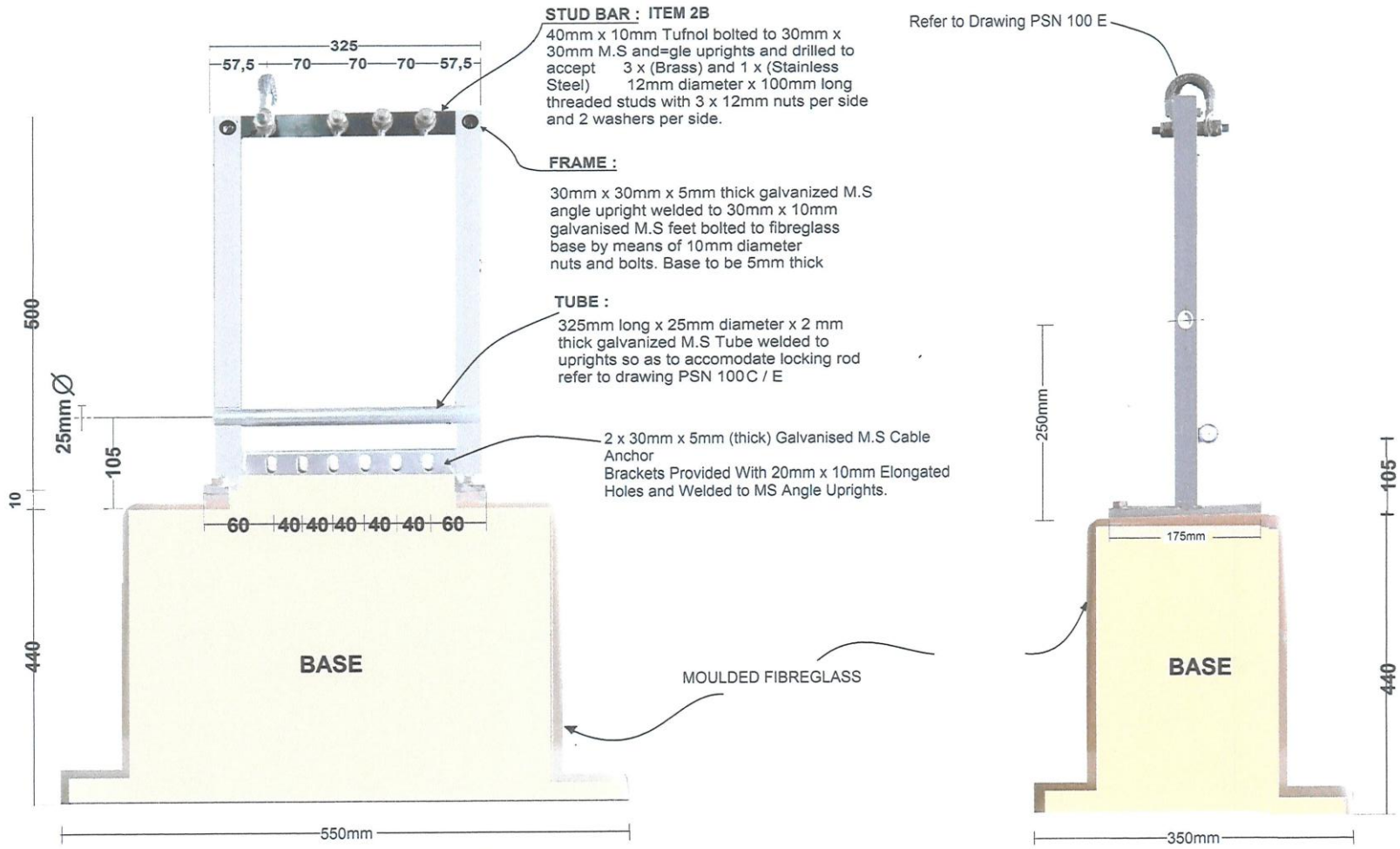

SECTION A-A (COVER REMOVED)

SECTION B-B (COVER REMOVED

	SIGN:	DATE:
DRAWN:	POOVAN NAIDOO	31/01/2017
CHECK:		
TECH:		
SM:		
BMO:		

	SIGN:	DATE:
	APPROVED	31/1/17
NOT TO SCALE	MAP REFERENCE:	
DRAWING No.	PSN 100G	

MSUNDUZI MUNICIPALITY
ELECTRICITY SUB-UNIT

SLIM-LINE CONSUMER DISTRIBUTION UNIT (300mm x 550mm)

ITEM 3

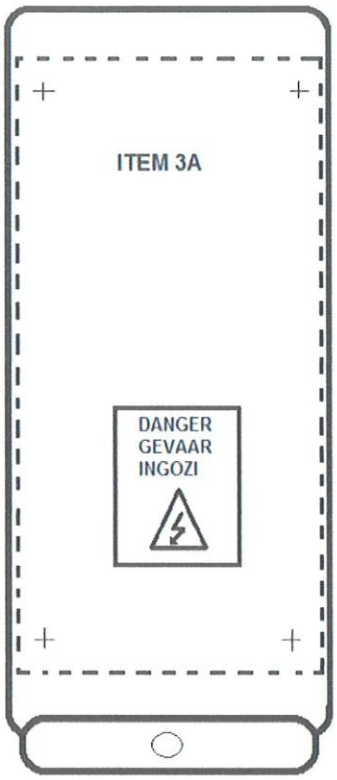

FRONT VIEW

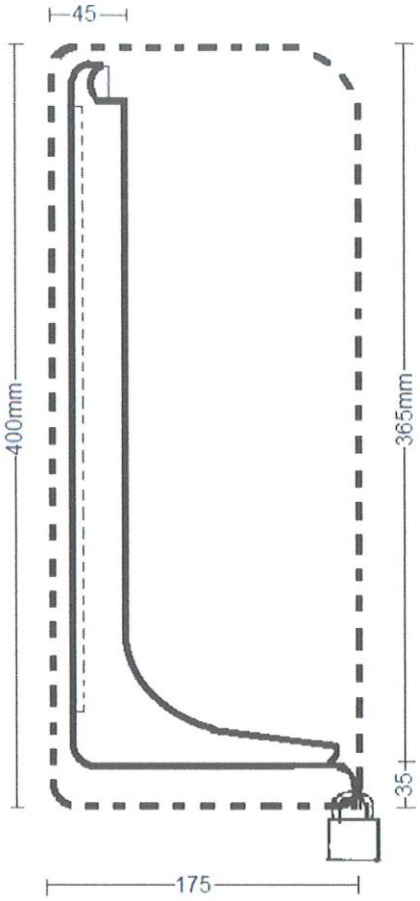

SECTION SIDE VIEW

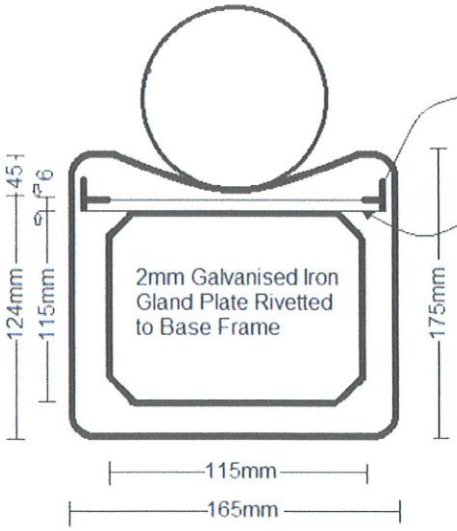

ANCHOR BRACKETS
20mm x 20 x 2 Galvanised Iron Anchor Brackets

MASONITE BOARD
6mm x 135 x 280 Screwed onto Angle Iron Anchor Brackets

TOP VIEW (COVER REMOVED)

	SIGN:	DATE:	MSUNDUZI MUNICIPALITY
DRAWN	Poovan Naidoo	31/7/17	ELECTRICITY SUB-UNIT
NOT TO SCALE	MAP REFERENCE:		MINIATURE CDU
DRAWING No.	PSN 100 H		STANDARD "MOWER" JUNCTION BOX

CDU Compliance Checklist

Technical Specifications Verification for Consumer Distribution Units (CDU, Slim CDU & Mower Box)

[ ] Please tick under status for conformation to specification

1. Item 1: Square Consumer Distribution Unit (CDU)

1.1 General & Exterior Surface

Status	Specification Requirement	Reference
[ ]	Conforms to approved drawings PSN 100A to PSN 100E.	*Ref: Item 1.0*
[ ]	Weatherproof GRP construction complying with SANS 141 - 1971 Type S (soil & moisture resistant).	*Ref: Item 1.0*
[ ]	Gel coat pigmented to colour C37 Light Stone (SANS 1091) or acceptable match.	*Ref: Item 1.0*
[ ]	Cystic Gelcoat 65 PA4 used, uniform thickness per SANS 141 Clause 3.2, backed by one layer of surface tissue.	*Ref: Item 6.1.1*
[ ]	No visible fastening devices on the exterior	*Ref: Item 6.1.6*

1.2 Laminate Thickness & Finish

Status	Specification Requirement	Reference
[ ]	3 layers of 450 g/sq m strand mat bound with Cystic 7256 PS orthophthalic polyester resin (no fillers/dilutants).	*Ref: Item 6.1.2*
[ ]	Resin-to-glass ratio strictly between 2.5:1 and 3:1.	*Ref: Item 6.1.2*

[ ]	Uniform thickness throughout with a smooth external finish.	*Ref: Item 6.1.2*
[ ]	All trimmed and drilled edges sealed with resin to prevent moisture ingress.	*Ref: Item 6.1.2*

1.3 Framework & Fastened Hardware

Status	Specification Requirement	Reference
[ ]	Internal framework hot-dipped galvanized per SANS 763 (post-fabrication). Refer to drawing PSN 100C.	*Ref: Item 6.1.3*
[ ]	All set screws, nuts, bolts, fastenings and spring washers manufactured from stainless steel and have no visible fastening devices on the cover.	*Ref: Item 6.1.3*
[ ]	Backing board is 10mm thick plywood (or equivalent) including DIN rail for up to 6 circuit breakers.	*Ref: Item 6.1.3*

1.4 Busbar, Studbar & Internal Construction

Status	Specification Requirement	Reference
[ ]	Busbars manufactured from 10mm thick Tufnol (Refer to drawing PSN 100E).	*Ref: Item 6.1.4/5*
[ ]	Three brass studs for phases and one stainless steel stud for neutral, complete with 3 nuts & 2 washers on each side.	*Ref: Item 6.1.4*
[ ]	Braided copper link (200A capacity) with 12mm crimped copper lugs installed on neutral stud.	*Ref: Item 6.1.4*
[ ]	Non-corrodible metal fastenings and catches; locking mechanism not visible from exterior.	*Ref: Item 6.1.6*
[ ]	Ventilation louvres designed to prevent wire insertion and vermin entry.	*Ref: Item 6.1.7*
[ ]	Triangular danger notice conforming to SANS 1186-1978 Type WW7 moulded into front door.	*Ref: Item 6.1.8*

2. Item 2: Slim Line Consumer Distribution Unit (Slim CDU)

Status	Specification Requirement	Reference
[ ]	Conforms to drawings PSN 100F to PSN 100G (GRP weatherproof construction per SANS 141-1971 Type S).	*Ref: Item 6.2*
[ ]	Gel coat: Cystic Gelcoat 65 PA4, pigmented to C37 Light Stone (SANS 1091), backed by surface tissue.	*Ref: Item 6.2.1*
[ ]	Laminate: 3 layers 450 g/sq m strand mat with Cystic 7256 PS resin (ratio 2.5:1 to 3:1). Edges resin sealed.	*Ref: Item 6.2.2*
[ ]	Tenderer stated mass of unit cover and combined unit inclusive of internal structure.	*Ref: Item 6.2.2*
[ ]	Framework hot-dipped galvanized per SANS 763; stainless steel fasteners used throughout.	*Ref: Item 6.2.3*
[ ]	Studbar/Busbar: 10mm Tufnol, 3 brass phase studs, 1 stainless steel neutral stud, 200A braided copper link.	*Ref: Item 6.2.4*
[ ]	Non-corrodible catches/fastenings with no visible exterior fastening devices.	*Ref: Item 6.2.5*
[ ]	Ventilation holes/louvres designed to prevent wire insertion and vermin entry.	*Ref: Item 6.2.6*
[ ]	Triangular danger notice conforming to SANS 1186-1978 Type WW7 moulded into front door.	*Ref: Item 6.2.7*

3. Item 3: Glass Reinforced Polyester Miniature CDU (Mower Box)

Status	Specification Requirement	Reference
[ ]	Conforms to drawing PSN 100H and weatherproof construction per SANS 141 - 1971 Type S (resistant to soil and moisture).	*Ref: Item 6.3*

[ ]	Gel coat pigmented to colour Mid Brunswick green (or acceptable match).	*Ref: Item 6.3*
[ ]	Internal construction for terminating and supporting cables in accordance with Drawing PSN 100H (Masonite mounting board for clip tray or DIN rail, pre-punched gland plates).	*Ref: Item 6.3.1*
[ ]	Metal fastenings and catches shall be of non-corrodible material.	*Ref: Item 6.3.2*
[ ]	Trilingual danger notice conforming to SANS 1186 - 1978 Type WW7 moulded into the front door.	*Ref: Item 6.3.3*

Tenderers Signature: **Name of Tenderer:**

_____ _____

Date: ____ / ____ / 2026