Eskom	Standard	Technology

Title: **SPECIFICATION FOR STEEL POLE OVERHEAD LINE SUPPORTS**

Unique Identifier:	**240-75883378**
Alternative Reference Number:	**34-1683**
Area of Applicability:	**Engineering**
Documentation Type:	**Standard**
Revision:	**2**
Total Pages:	**38**
Next Review Date:	**December 2029**
Disclosure Classification:	**Controlled Disclosure**

PCM Reference: **240-51017656**
SCOT Study Committee Number/Name: **DXSC11**

Content

Page

1. Introduction 5
2. Supporting clauses 5
   - 2.1 Scope 5
     - 2.1.1 Applicability 5
   - 2.2 Normative/informative references 5
     - 2.2.1 Normative 5
     - 2.2.2 Informative 5
   - 2.3 Definitions 6
     - 2.3.1 General 6
     - 2.3.2 Disclosure classification 7
   - 2.4 Abbreviations 7
3. Design of Steel Poles 7
   - 3.1 Applicable Design Standards 7
   - 3.2 Standard and Alternative Designs 7
   - 3.3 Deflection Limits 7
   - 3.4 Aesthetic and Geometric Considerations 8
     - 3.4.1 Slenderness limits 8
     - 3.4.2 Tube size limits 9
     - 3.4.3 Tube Taper limits 10
   - 3.5 Base Plate and Holding Down Bolt Arrangement 11
   - 3.6 Earthing 12
   - 3.7 Ladders and Steps 13
     - 3.7.1 Single stile ladders 13
     - 3.7.2 Twin Stile ladders 13
   - 3.8 Fall Arrest System 13
     - 3.8.1 Double lanyard fall arrest system 13
     - 3.8.2 Cable or rail based fall arrest system 13
   - 3.9 Jacking System 13
   - 3.10 Documentation 14
     - 3.10.1 Design Documentation 14
     - 3.10.2 Outline Drawings 14
     - 3.10.3 Fabrication Drawings 14
     - 3.10.4 Erection Instructions 15
   - 3.11 General Requirements 15
4. Fabrication of Steel Poles 15
   - 4.1 General Fabrication 15
   - 4.2 Steel Properties 16
   - 4.3 Dimensional Tolerances 16
     - 4.3.1 Pole Members 16
     - 4.3.2 Cross Arms 17
     - 4.3.3 Base Plates 17
   - 4.4 Attachment Points and Bolt Holes 17
   - 4.5 Marking 17
   - 4.6 Welding 18

ESKOM COPYRIGHT PROTECTED

When downloaded from the WEB, this document is uncontrolled and the responsibility rests with the user to ensure it is in line with the authorized version on the WEB.

4.6.1 Inspection and Testing of Welds 18
4.7 Quality Assurance and Inspections 18
4.8 Galvanising 19
4.9 Safety 19
5. Handling, Packing and Transport of Steel Poles 19
6. Erection of Steel Poles 20
6.1 Erection Tolerances 20
6.2 Tightening of Bolts 20
6.3 Assembly of Poles 20
6.4 General Erection Requirements 20
6.5 Theft prevention in High Risk Areas 20
7. Mechanical Testing 21
7.1 Type Test Requirements 21
7.2 Testing Setup 21
7.3 Loading 21
7.3.1 Load Measurements and Recording of Data 21
7.4 Tests and Acceptance Criteria 22
8. Authorization 23
9. Revisions 23
10. Development team 23
11. Acknowledgements 23
Annex A – - Technical Schedules A / B and Deviation Schedule 24
Annex B – Typical J-Bolt design for Gr. 4.8 J-bolts 28
Annex C – Typical Holding-down Bolt Arrangement and Earth Connection 29
Annex D – Annex D – Earth lug for accommodation of additional earthing 30
Annex E – Typical Jacking System Lug Arrangement 31
Annex F – Pole Fabrication Inspection Checklist 32
Annex G – Standard 132kV Keyhole attachments for post insulators 34
Annex H – Typical OPGW Down-lead Lug Arrangement 35
Annex I – Practical Raking Guidelines 36
Annex J – Removable steps 38

Figures

Figure 1: Determination of effective length factor 9
Figure 2: Determination of tube taper 11
Figure 3: Connection of reinforcing to Straight HD bolts (left) and J-Bolts (right) 12
Figure I.1: Layout and adjustment of base plate for raking 37

Tables

Table 1: Lower Slenderness Limits (Guideline) 8
Table 2: Lower Tube Diameter Limits (tapered, fabricated sections) 9
Table 3: Tube section length limit 10

ESKOM COPYRIGHT PROTECTED

When downloaded from the WEB, this document is uncontrolled and the responsibility rests with the user to ensure it is in line with the authorized version on the WEB.

Table 4: Standard fabrication sizes 10

Table 5: Minimum Tube Taper Limits (tapered, fabricated sections)..... 10

Table 6: Tests and Acceptance Criteria 22

ESKOM COPYRIGHT PROTECTED

When downloaded from the WEB, this document is uncontrolled and the responsibility rests with the user to ensure it is in line with the authorized version on the WEB.

1. Introduction

This document builds on and replaces the previous standard SCSSCABG2 Rev.0, Distribution Specification for Steel Mono-Pole Compact Towers. Whilst all relevant aspects of the latter document have been incorporated into this standard, this revision represents a complete re-compilation of the original standard.

The Scope has been extended to consider design and fabrication aspects as they relate to ACSE 48-11, The Design of Steel Transmission Pole Structures. The standard has also incorporated new requirements based on benchmarking with international practice. Fabrication aspects as detailed in SANS 10225 - The Design and Construction of Lighting Masts have previously been used by the industry for the fabrication of overhead line supports, and certain aspects of this standard have also been considered.

Specific Guidance with respect to the inspection of fabricated components, as well as the transport, assembly and erection of steel poles has also been included.

2. Supporting clauses

2.1 Scope

This specification is intended to serve as a guideline for the manufacture, testing and erection of steel pole structures.

This specification covers both free-standing and guyed steel poles, and includes structures consisting of both constant taper and tapered sections.

References to specification SCSSCABG2 Rev.1 may be assumed to refer to this document.

2.1.1 Applicability

This document shall apply throughout Eskom Holdings Limited Divisions.

2.2 Normative/informative references

Parties using this document shall apply the most recent edition of the documents listed in the following paragraphs.

2.2.1 Normative

[1] ASCE Standard 48-11: Design of Steel Transmission Pole Structures. Published by the American Society of Civil Engineers.

[2] AWS D1.1/D1.1M 2010: Structural Welding Code – Steel. Published by the American Welding Society

[3] SANS 10162-2005: The structural use of steel. Published by the South African Bureau of Standards

[4] SANS 10280: Overhead power lines for conditions prevailing in South Africa, Part 1: Safety, 2011

[5] SANS 121 / (ISO 1461): Hot dip galvanised coatings on fabricated iron and steel articles-specifications and test methods

[6] DIN EN ISO 898-1:1999: Mechanical properties of fasteners made of carbon steel and alloy steel. Part 1: Bolts, screws and studs.

[7] ISO 2063_1: Thermal spraying — Zinc, aluminium and their alloys

[8] Occupational Health and Safety Act 85 of 1993, incorporating the Construction Regulations, and Electrical Machinery Regulations. Published by South African Government Press, under auspices of the Department of Labour.

2.2.2 Informative

None

ESKOM COPYRIGHT PROTECTED

When downloaded from the WEB, this document is uncontrolled and the responsibility rests with the user to ensure it is in line with the authorized version on the WEB.

2.3 Definitions

2.3.1 General

Definition	Description
Broken conductor load	A load case used to model the effects on the structure after a failure of a complete phase conductor bundle.
Circumferential Weld	A weld joint directionally perpendicular to the longitudinal axis of a structural member. Commonly used to join two closed section shapes of a common diameter.
Complete Joint Penetration	A penetration by weld metal for the full thickness of the base metal in a joint with a groove weld.
Critical Weld	Welds occurring on the interface of tube sections and flange or base plates, or longitudinal welds within a slip joint zone are regarded as critical welds.
Ground Sleeve	A steel jacket that encapsulates a portion of a directly embedded pole immediately above and below the ground line.
Intermediate structure	Structure designed for a zero or low line deviation angle, occurring within a strain section.
Loading trees	The complete set of design loads indicating the location, magnitude and direction which a structure is required to withstand, as would be applied during tower testing.
Permanent set	The final deflected shape of the superstructure, following the removal of design loads, but excluding base rotation. Permanent set limits are ordinarily applicable during full scale tower testing. During testing, permanent set is measured at pole top, to the nearest 5mm.
Raking	The construction of strain poles in an off-plumb orientation, in order to reduce apparent pole deflection due to service loads.
Rapping plate	A strengthening plate (often diamond shaped) welded across a welding seam, also used for rapping (striking with a hammer) to assist in joint sliding.
Shop Detail or Fabrication Drawings	Drawings that are usually prepared by the fabricator which contain complete and detailed information necessary for the fabrication of the structure and components.
Slenderness ratio	The ratio of the effective length of a column to the least radius of gyration of its cross section (=KL/r). This ratio affords a means of classifying columns, for the determination of buckling capacity. See also ASCE 48-11.
Snug tight	The tightness of bolted fasteners, which is achieved by the full effort of a workman with an ordinary spud wrench. For multiple bolts in contact with the same plate, each nut is turned to refusal and the pattern is cycled and repeated so that all fasteners are snug.
Strain structure	An overhead line support employing strain assemblies at the end of a tension section, typically used for terminal, uplift or significant bend point supports.
Toughness	The ability of structural material to withstand dynamic loads and impact loads, as measured by the Charpy V-notch test.
Tube Taper	The reduction in outer diameter of a pole per unit length, reflected in mm/m.

ESKOM COPYRIGHT PROTECTED

When downloaded from the WEB, this document is uncontrolled and the responsibility rests with the user to ensure it is in line with the authorized version on the WEB.

2.3.2 Disclosure classification

Controlled disclosure: controlled disclosure to external parties (either enforced by law, or discretionary).

2.4 Abbreviations

None

3. Design of Steel Poles

3.1 Applicable Design Standards

The design of steel poles is to comply with the provisions of ASCE Standard 48-11.

Further design guidelines with reference to conditions in Southern Africa are stated in SANS 10280-2011.

Designers are to note the adoption of strength factors to untested structures in accordance with the latter standard and section 7 of this specification.

3.2 Standard and Alternative Designs

Where Eskom has provided standard designs for the overhead line structures, alternative designs by the fabricator (where allowed) must be designed to support the applied loading on the structure as provided by the standard design.

Eskom's engineer may provide loading trees to ensure structural compatibility with the original design requirements, and structures shall be designed to withstand applied loads for ultimate conditions as given by factored loads. Minor deviations to standard pole section lengths deemed necessary by the fabricator to facilitate the fabrication process and / or minimize wastage need not be regarded as an alternative design, however such deviations should be noted in the Deviation Schedule (see Annex A - Technical Schedules A / B and Deviation Schedule).

The geometry of poles shall be governed by provisions noted in section 3.4.

Alternative designs shall respect the basic tower top geometry, shielding angles, electrical clearances, phase arrangements, and insulation as provided in standard designs.

3.3 Deflection Limits

The following deflection limitations apply during tower testing:

- Ultimate wind loads: Allowable lateral deflection at pole top = 5.5% of pole height above ground level
- Broken conductor loads: Allowable lateral deflection at pole top = 7% of pole height above ground level
- Working loads: Allowable lateral deflection at pole top = 2.2% of pole height above ground level
- Permanent set deflection limits, after removal of ultimate load: Allowable lateral deflection at pole top = 1% of pole height above ground level.

A further deflection limit of 1.5% (applicable during construction after stringing) applies to the lateral deflection of the pole top from base center. This is not a design limit, and poles predicted by theoretical calculation to deflect past 1.0% under service load conditions may be raked as per section 0.

ESKOM COPYRIGHT PROTECTED

When downloaded from the WEB, this document is uncontrolled and the responsibility rests with the user to ensure it is in line with the authorized version on the WEB.

3.4 Aesthetic and Geometric Considerations

3.4.1 Slenderness limits

3.4.1.1 Lower height to width limits

Since tubular steel poles are often prescribed for use in environmentally sensitive or highly visible areas, the designer shall take care to ensure, as far as is reasonably practicable, to achieve aesthetically acceptable designs.

The use of thin-walled, large diameter sections can result in structurally efficient designs, albeit at the expense of aesthetic appeal. The following height to width (H_p/D_b) ratios are suggested as a guide to determine lower limits, where

H_p = total height of structure above ground

D_b= diameter at base (across flats)

Table 1: Lower Slenderness Limits (Guideline)

Maximum line deviation angle	Minimum H_p/D_b Ratio
Suspension structures	22
Moderate angles, up to 40 degrees	18
Heavy angles and terminal structures	14

3.4.1.2 Upper Slenderness limits

Poles with large slenderness ratios may be prone to buckling instability, service load deflections and wind induced vibration. In addition, vortex shedding of wind forces by structures and structure members can result in oscillation of slender arms, poles, or other elements. This phenomenon is exacerbated in structures employing long, constant diameter sections. For truss members subjected to tension-compression forces only, the recommended upper slenderness ratio (KL/r) of 200 as per ASCE 48-11 applies. For permanently loaded members carrying both compressive and flexural loads, the KL/r limit is 150. This limit may only be exceeded where testing and dynamic response analysis reveals no adverse structural effects or deflections beyond those specified in 4.3, and where compliance to the structural capacity in terms of ASCE 48-11 is demonstrated. K,L and r are defined as follows:

K= effective length factor, as defined by recommended value in 1

L = unbraced length (in mm)

r = radius of gyration (in mm)

ESKOM COPYRIGHT PROTECTED

When downloaded from the WEB, this document is uncontrolled and the responsibility rests with the user to ensure it is in line with the authorized version on the WEB.

where:

k = modification factor based on column end conditions (see below)

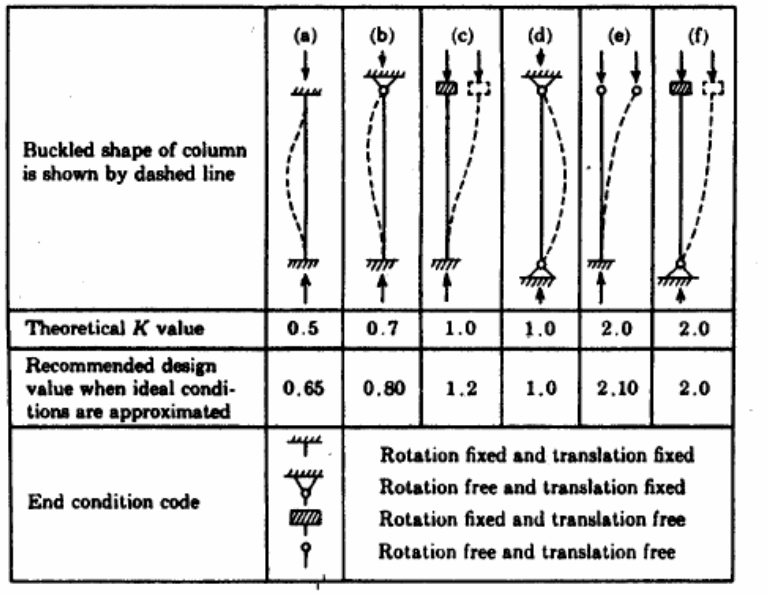

Figure 1: Determination of effective length factor

3.4.2 Tube size limits

3.4.2.1 Lower Tube Diameter Limits

The minimum diameter for small tapered tubes as governed by fabrication limitations is given in 2. The designer may adopt adjustment to these limits as advised by the relevant fabricator.

Table 2: Lower Tube Diameter Limits (tapered, fabricated sections)

Sheet Thickness (mm)	Min tube diameter across flats(mm)
4.5	150
5	200
6	250
8	300
10	325
12	350
14	375
16 and above	400

For small members, where closed tapered sections do not comply with the above limits, the designer may consider the use of standard rolled I, H, T open sections, and rolled circular hollow sections (CHS) as defined in the latest version of the South African Steel Construction Handbook.

ESKOM COPYRIGHT PROTECTED

When downloaded from the WEB, this document is uncontrolled and the responsibility rests with the user to ensure it is in line with the authorized version on the WEB.

3.4.2.2 Maximum Tube Length Limits

Tube section lengths should be based on transportation limits, available stock sizes, and galvanising bath limits.

While the transportation of outsized sections is possible, the following practical upper transportation limits are suggested:

Table 3: Tube section length limit

Transport Mode	Tube length limit (m)
Containerised (40 ft. container)	11.9
Break bulk / non containerised	13.7

The availability of standard sheet sizes impacts on the amount of wastage generated during fabrication. In South Africa, the following standard dimensions apply:

Table 4: Standard fabrication sizes

Flat section type	Standard fabrication sizes
Hot rolled sheets : 1,2mm to 12mm thick	Widths of 0.6m-1.8m, and lengths of up to 6m
Plates : 4.5mm to 150mm thick	8m x 2m, 10m x 2,4m, 12m x 3m and 13m x 2,4m.

For steel fabricated and galvanised in South Africa, the dimensions of galvanising baths need to be considered. This generally implies as length limit of 13.5m for diameters of up to 1.3m and 9.5m for diameters up to 1.8m.

3.4.3 Tube Taper limits

A minimum tube taper is required to prevent excessive slip at friction joints. Where slip joints are utilised, the taper limits in 5 apply. Where differing wall thicknesses are used between slip joints, the thicker of the two sections shall be used with reference to the table.

Note: These are lower limits. Higher slopes are commonly used in practice and will result in reduced slip.

Table 5: Minimum Tube Taper Limits (tapered, fabricated sections)

Sheet Thickness (mm)	Min tube taper (mm/m)
6mm and lower	17
7 to 10	18
11 to 20	20
20 and above	22

ESKOM COPYRIGHT PROTECTED

When downloaded from the WEB, this document is uncontrolled and the responsibility rests with the user to ensure it is in line with the authorized version on the WEB.

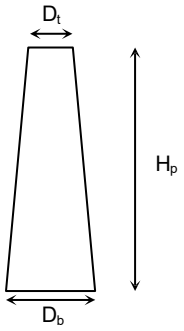

$$\text{Tube Taper} = \frac{D_b - D_t \text{ (in mm)}}{H_p \text{ (in m)}}$$

Figure 2: Determination of tube taper

3.5 Base Plate and Holding Down Bolt Arrangement

Base plates for alternative designs need not incorporate gussets. However, where gussets are used[1], these shall be designed to:

- Provide positive support to the base plate allowing a commensurate reduction in base plate thickness,
- Withstand local buckling in the gusset web itself, and
- Transfer stresses safely with no risk of punching into or deforming the pole shaft wall.

Gussets shall as far as possible be positioned at the apex of bend lines. Gussets placed away from the mast bend lines may require additional local strengthening of the pole wall.

The holding down (HD) bolt arrangement will respect minimum spacing distances specified in ASCE 48-11, as well as clear distances from the gusset and pole wall faces to enable tightening.

Alternative holding down (HD) bolt arrangements may incorporate bolts of a grade and/or diameter different to that specified, providing that the overall embedment depth does not exceed 900mm. The arrangement shall be designed and dimensioned to safely transfer stresses into the reinforced concrete column.

The allowable bond stress on smooth embedded rods is limited to 1.4MPa.

The allowable compressive stress on embedded plates and rods is limited to 12.5MPa.

Designers may consider the use of hooked J-bolts, or straight bolts using one or more embedded templates.

J- Bolt hook lengths extending within 4 x HD bolt diameters from the HD bolt face may be assumed to engage the concrete in compression. Hook lengths beyond this limit may only be assumed to engage bond stress from the surrounding concrete. See Annex B, for typical J-bolt design details.

Higher capacity grade bolts, such as Grade 8.8 bolts, are not generally suited for use as J-bolts, as such arrangements exceed the allowable bearing and bond stress limits. Designers shall in such cases consider straight bolts used in combination with one or more embedded templates.

Embedded bolt templates shall not exceed the dimensions of the base plate. Where more than one template is used, they shall be spaced at least 400mm apart. See typical straight HD bolt arrangement in Annex C – Typical Holding-down Bolt Arrangement and Earth Connection.

HD bolts shall be designed for a single nut both above and below the base plate (used for leveling purposes), unless applied loads exceed the thread shear capacity of single nuts.

[1] The use of gussets may significantly reduce plate sizes on base plates and flange plates, at the expense of increased fabrication cost and interference of the gussets with the placing, or tightening of HD bolts. Designers and fabricators are encouraged to determine the optimal configuration considering both material and fabrication costs.

ESKOM COPYRIGHT PROTECTED

When downloaded from the WEB, this document is uncontrolled and the responsibility rests with the user to ensure it is in line with the authorized version on the WEB.

Unless specified otherwise, HD bolts shall be galvanised to 200mm below embedment level, and supplied with thread protecting sleeves.

Base plates shall be assumed to be supported above concrete level. Unless specified otherwise, no grout is required under the base plate and no inspection port holes are required at the pole base.

Designs incorporating grouted bases may be tendered as an alternative design, provided that such designs

- still incorporate leveling nuts used prior to grouting,
- specify the use of non-shrink grout including two 30mm diameter weepholes, and
- incorporate inspection port holes with removal covers, to allow the internal finishing of grout.

3.6 Earthing

On planted poles, additional earthing will not normally required, unless resistance testing prior to the stringing of earthwire reveals unacceptable earth resistance readings.

The standard earthing system to be installed on bolted footings will incorporate a single electrical connection between the holding down bolt arrangement and the foundation reinforcing (where present). The connection shall be made with an offcut of earthwire used on the project, or conductor capable of carrying the stated earthwire current capacity.

Where straight HD bolts are used, the template shall be drilled to accommodate an M12 bolt for the internal earthing connection as per Annex C J-Bolt systems will be connected by clamping a 500mm length of earth conductor to one of the J-bolts in the group. See 3.

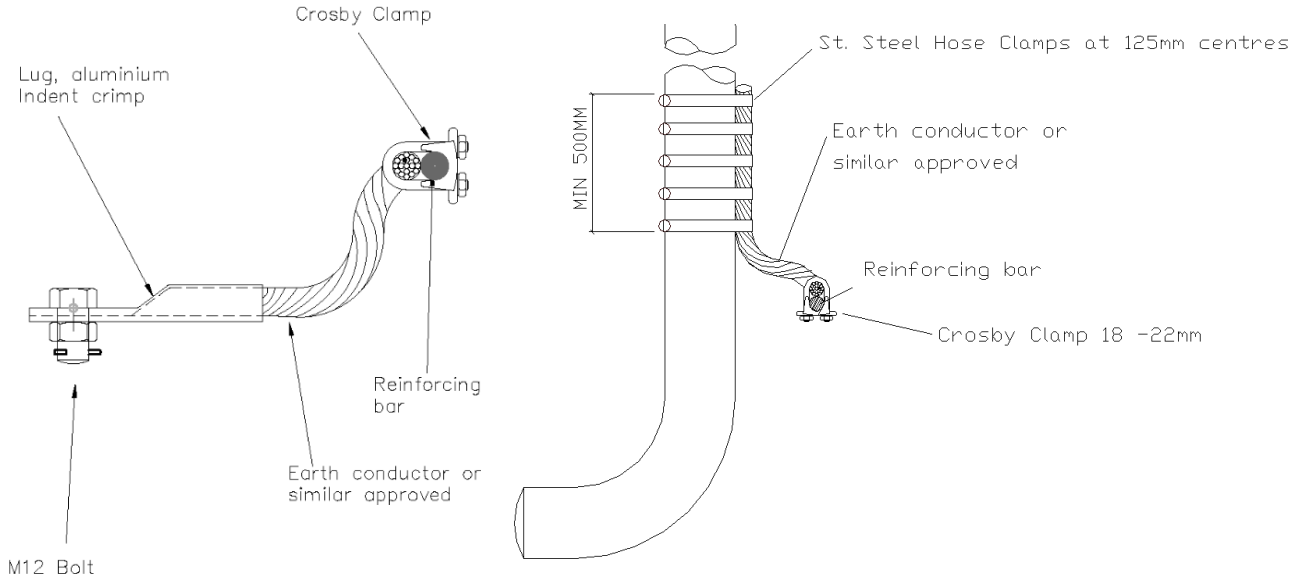

Figure 3: Connection of reinforcing to Straight HD bolts (left) and J-Bolts (right)

Where the stated resistance cannot be achieved (typically a limit of 20 to 40 ohms) additional earthing may need to be installed. For such applications, the incorporation of a 50mm long, 50 x 50 x 5 angle is welded close to the base of the pole, as indicated in Annex D – Earth lug for accommodation of additional earthing.

The incorporation of this lug shall be fitted to all poles unless specified otherwise (as may be appropriate for areas with low levels of lightning activity or where soil conditions are known to have generally low earth resistance).

ESKOM COPYRIGHT PROTECTED

When downloaded from the WEB, this document is uncontrolled and the responsibility rests with the user to ensure it is in line with the authorized version on the WEB.

3.7 Ladders and Steps

Poles shall be equipped with either ladders or steps, which may be removable

Ladders shall be fitted to the structure after assembly and compression of pole shafts. Unless specified otherwise, the assembled ladder is to end approximately 6 to 8m above ground level. No anti-climb device at the base of ladders is required.

Steps shall be vertically spaced at 300mm and shall allow the climber a comfortable climbing path.

Vertical stiles / stringers shall be continuous across slip joints and flange plates. The upper end of the ladder is fixed to the pole top, but lower support points must allow for vertical movement of up to 100mm to prevent distortion of the ladder when additional settlement of the mast occurs.

In the absence of alternative cross-arm climbing arrangements specified by Eskom, cross-arms must be equipped with 120mm M16 step bolts, spaced at 300mm centers, which are bolted externally using suitable attachment brackets.

Ladders may incorporate the use of one or two vertical stiles, as specified by Eskom:

3.7.1 Single stile ladders

A single vertical stile with staggered rungs on either side may be specified, which are permanent or removable (See Annex J – Removable steps.).

3.7.2 Twin Stile ladders

Ladders utilising twin vertical stiles shall incorporate horizontal rungs which protrude by approximately 10mm through holes spaced at 300mm, and welded on both faces of the vertical stile.

3.8 Fall Arrest System

3.8.1 Double lanyard fall arrest system

Where it is envisaged that poles are to be climbed using double lanyards, ladders utilising twin vertical stiles on either side of rungs are required to prevent clipped lanyards from sliding out. Alternatively, ladders incorporating a single vertical stile with staggered rungs on either side may be considered, provided that such rungs are equipped with hooking rings to accommodate clipped lanyards. See Annexure J – Removable steps.

3.8.2 Cable or rail based fall arrest system

Where a cable or rail-based fall arrest system is specified, ladders incorporating a single vertical stile with staggered rungs on either side of the cable or rail shall be used.

The fall arrest system shall be of a type approved by Eskom.

3.9 Jacking System

Jacking lugs shall be designed to accommodate the use of high capacity hydraulic rams which are capable of applying up to 60 tons of load onto sections in either direction.

The use of hydraulic rams will allow for sections to be pulled together and pushed apart, in the event that re-alignment is required. Typical jacking lug dimensions and placement are detailed Annexure E.

The design of alternative jacking lugs is permissible, provided that compliance with the standard jacking system can be demonstrated, and the maximum capacity of jacking lugs exceeds the recommended jacking force as per section 4.9.

Designers may also consider the use of waste base plate material for fabrication of jacking lugs.

The minimum jacking load shall be at least equal to the 1.8 times the sum of the design weight span of conductors and dead weight of the completed tower above that particular slip joint.

ESKOM COPYRIGHT PROTECTED

When downloaded from the WEB, this document is uncontrolled and the responsibility rests with the user to ensure it is in line with the authorized version on the WEB.

The final recommended jacking load shall be specified by the fabricator, with due consideration to minimising joint slip after construction, and the maximum allowable compressive and circumferential stresses on the slip joint during the jacking operation.

3.10 Documentation

3.10.1 Design Documentation

All documents to be submitted shall be in English. The units used shall be SI units.

Alternative designs by the fabricator submitted at tender stage shall be accompanied by a summary document for each structure demonstrating that poles submitted meet fully the requirements of this specification. It shall indicate at minimum:

- Design moments at the base and at slip joints and at any other critical points along the pole, including the effects of the secondary moments due to deflection
- Deflections along the pole
- Calculated and allowable stresses at each level
- Ground line reactions

Upon contract award, the fabricator shall submit PLS Pole files for alternative structures accepted by Eskom. The PLS Pole models shall include sufficient detailed modeling such as pole sections, junction plates, insulators and base plates.

Acceptance of pole models is subject to a design check by the Eskom engineer. Such acceptance shall not constitute a transfer of design risk or relieve the contractor or fabricator from the responsibility of compliance to specifications.

3.10.2 Outline Drawings

Outline drawings of alternative poles shall be submitted by the fabricator at tender stage, based on the outline drawings for standard designs, which includes the following information:

- Basic design information: Conductor, Earthwire, Wind/ Weight/ Electrical Span.
- Geometry: Attachment height, length, thickness, top and bottom outside diameters across flats for all pole segments and cross-arms.
- Overlap length for all slip joints.
- Distance between cross arms.
- Cross arms overhang.
- Cross arm connection details.
- Base plate and holding down bolt details (OD, ID, PCD, Bolt grade, diameter and number).
- Length of insulators/ hardware assemblies.
- Swing angles and electrical clearance of I-string assemblies and unrestrained jumpers.
- Earth conductors shielding angles.
- Design overturning moments.
- Recommended raking angles for line angles in increments of 10 degrees.
- Steel grade.

3.10.3 Fabrication Drawings

Within four weeks of contract award, fabrication drawings shall be submitted for approval.

ESKOM COPYRIGHT PROTECTED

When downloaded from the WEB, this document is uncontrolled and the responsibility rests with the user to ensure it is in line with the authorized version on the WEB.

Acceptance of such detail designs by Eskom will constitute an acknowledgement to proceed with fabrication and will not relieve the fabricator to provide correctly designed and manufactured components.

Likewise, acceptance by Eskom of alternative designs does not relieve the responsibility of the fabricator to comply with structural requirements in this specification and to provide structures capable of resisting the stated design loads.

3.10.4 Erection Instructions

Upon supply of completed structures, the erector shall be provided with handling and erection instructions from the fabricator, which is based on requirements specified in Section 5.7 and 7. Instructions shall include:

a) Exceptions to requirements specified in Section 5.7 and 7

b) Basic assembly and erection procedure

c) Minimum and maximum slip joint penetration limits

d) Minimum and maximum axial slip-joint assembly load

e) Bolt torque requirements (in addition to those specified in section 6.2)

3.11 General Requirements

Pole tops shall incorporate a lifting lug with a minimum ultimate capacity equal to the greater of:

- twice the dead weight of the complete structure, or
- 210kN (to accommodate a 210kN shackle with a 20mm diameter bolt).

Individual sections weighing more than 3 tons should also be equipped with lifting lugs. Pole body sections between 0.3 and 3 tons shall be equipped with two 24mm holes at the upper end of the tube, spaced 40mm from the tube end.

Unless specified otherwise, strain poles shall be designed with 30^0 sloping tops to dissuade bird perching. Unless specified otherwise, bird perches will be installed on intermediate structures, aligned in the direction of conductors. In addition, intermediate pole tops shall be designed with a minimum slope of 15^0 to the horizontal to facilitate drainage.

The overlap section of a slip joint shall be at least 1,5 times the maximum inside diameter of the female section.

4. Fabrication of Steel Poles

4.1 General Fabrication

The fabrication of steel poles shall comply with the provisions of ASCE Standard 48-11.

The finished product shall have a smooth external surface free from steel splinters and welding splatter. All surfaces shall be clean and shall present a neat appearance. All sharp corners shall be rounded with no sharp edges.

Flanged joints shall be manufactured with a jig set up in the manufacturer’s workshop to ensure squareness of the flange onto the pole.

Flanges and base plates shall be free from distortion after welding.

Junction plates and other welded mating surfaces requiring exact tolerances to accommodate bolted sub-assemblies shall be fabricated using appropriate jigs and shall be checked for dimensional accuracy.

Base plates shall be fabricated from a single steel plate, (i.e. bases plates may not consist of multiple parts welded into a single plate). Embedded and non-embedded templates may be fabricated from multiple sections, provided that the resulting product is free of deformation and complies with tolerances specified in 4.3.3.

ESKOM COPYRIGHT PROTECTED

When downloaded from the WEB, this document is uncontrolled and the responsibility rests with the user to ensure it is in line with the authorized version on the WEB.

4.2 Steel Properties

Standard designs will assume the use of S355J0 plate. Alternative steel grades are acceptable, providing that they comply with EN 10025-2 or CSA-G40.20/G40.21. Any deviation from the stipulated yield stress shall be communicated to the pole designer for acceptance.

The minimum thickness of the steel used for manufacture of poles or for circular hollow sections shall be 4,5 mm.

Impact properties in the longitudinal direction of all structural plate or coil materials shall be determined in accordance with the Charpy V-notch test. Charpy V-notch requirements at a minimum, shall meet the requirements of 27 J at 0˚C, i.e. equivalent to J0 category steels according to EN 10025-2 or category WC steels according to CSA-G40.20/G40.21.

Silicon and Phosphorous content of steel is limited as follows[2]:

“Aluminium Killed Steel”: Silicon (Si) = 0.01 to 0.04%, Phosphorous (P) < 0.015% maximum

“Silicon Killed Steel”: Silicon (Si) = 0.15 to 0.25% and Phosphorous (P) < 0.02% maximum

The use of both “Aluminium Killed Steel” and “Silicon Killed Steel” on the same galvanised component may cause the galvanising take up to vary beyond acceptable limits. The fabricator shall ensure that the mixing of such steel types will be avoided where possible in accordance with section 5.7.

The fabricator shall maintain traceability between fabricated components and mill test certificates for mechanical characteristics and chemical composition of sheet steels. Original mill certificates may be kept at the fabrication facility.

4.3 Dimensional Tolerances

The following tolerances are permissible, provided that the structure complies with required slip length distances, hole spacing edge distances, and general structural requirements.

4.3.1 Pole Members

The permitted variation (tolerance) from a stated dimension, length of pole members, outside diameter, straightness shall be as follows:

a) Mean outside diameters, measured at slip joint level:± 0.5 % with ± 2 mm minimum

b) Ovalisation: The dimensional percentage noted for two measurements taken between two perpendicular diameters at slip joint level : less than 3 % [(Dmax-Dmin)/Dmax < 3 %].

c) Length of pole sections: ± 50 mm

d) Members Straightness: less than 0.3 % of 1 meter member length (3 mm per meter). Straightness is taken as the maximum distance measured between the centerline of the faces of the pole being measured, at any point along the length of the pole, to a line drawn from the centre of the tip of the pole to the centre of the butt of the pole. The measurements shall be done on at least two faces of the pole which are at 90° to each other.

[2] See HDGSA Hot Dip Galvanized Information Sheet No.4 for further details

ESKOM COPYRIGHT PROTECTED

When downloaded from the WEB, this document is uncontrolled and the responsibility rests with the user to ensure it is in line with the authorized version on the WEB.

4.3.2 Cross Arms

a) Length of cross arms: ± 20 mm

b) Horizontal or vertical inclination of cross-arms: ±0.6°, or ± 1 % L; with L being the total length of the cross arm

c) Center of flange plate w.r.t. centerline of cross-arm: ± 2 mm

4.3.3 Base Plates

a) Outside and inside diameters: ± 5 mm

b) Drilling diameter: ± 1 mm

c) Location of holes for anchor bolts: ± 1 mm

d) Center of base plate w.r.t. centerline of pole: ± 4 mm

4.4 Attachment Points and Bolt Holes

Strain plates shall be sized in accordance with the ultimate tensile strength (UTS) of the supported conductor bundle, and shall include 3 bolt holes per side. The minimum edge distance in the direction of applied load is 1.5 bolt diameters. Plate and hole sizes for strain plates are as follows:

- 120 kN strain plates : 16mm plate, 18mm holes
- 210kN strain plates: 20mm plate, 22mm holes
- 300kN strain plates: 22mm plate, 24mm holes
- 450kN strain plates: 30mm plate, 32mm holes

The fabricator shall ensure that attachment points are compatible with proposed hardware arrangements.

All openings (e.g. bolt holes, slots etc.) shall be made in the poles during the manufacture of the poles. These openings may be required for the attachment of cross-arms and other equipment. All openings shall be made before galvanizing or treating.

Bolt hole diameter tolerances are as follows:

+ 6 mm for foundation bolts.

+ 2 mm for all other bolts.

Brackets for post insulator attachments shall be manufactured with keyholes and dimensions in accordance with either of the two standard (circular or square) formats included in Annex G – Standard 132kV Keyhole attachments for post insulators.

Selected poles as identified by the client may be fitted with OPGW down-lead clamp tabs. See Annex H – Typical OPGW Down-lead Lug Arrangement.

4.5 Marking

Each base section shall be marked 1,5 m above the ground line with stamped lettering at least 20mm high and indented 1mm. Identification marks and structure-related information shall be legible and visible after galvanisation and after the structure has been assembled. The label which may be included on an identification plate welded to the structure or stamped directly on the face shall contain the following information:

a) the manufacturers name, trade mark, or unique identifier;

b) the Eskom pole design code, followed by the lowest cable attachment height e.g. “276G 23.0m CAH”;

c) the date of manufacture in numerical format, e.g. “20-10-2012”.

The minimum and maximum splice length shall be clearly and neatly marked with 300mm x 20mm white paint strips on the male member, located above jacking lugs.

ESKOM COPYRIGHT PROTECTED

When downloaded from the WEB, this document is uncontrolled and the responsibility rests with the user to ensure it is in line with the authorized version on the WEB.

The orientation of cross-arms with respect to the base plate shall be clearly and neatly marked on the base plate and upper non-embedded template to ensure correct orientation of HD bolts.

In order to promote safe lifting practice, all components weighing more than 0.3 tons shall be stamped to indicate the weight in tons of the component. The mark shall be located as close as possible to a prominent lifting lug or point, with the lettering: “WEIGHT: … T”.

HD bolts with grades higher than 4.8 shall be stamped to indicate the bolt grade.

4.6 Welding

The welding of steel poles is to comply with the provisions of AWS D1.1/D1.1M 2010 Structural Welding Code – Steel.

Coded welding personnel shall perform all welding. Finished welds shall be smooth and free from slag with no sharp edges. Welds shall be of a strength that does not change the designed proof load, ultimate load or crippling load.

All shaft circumferential welds and their associated sections of longitudinal welds and all longitudinal welds for the female parts of a slip joint shall be full-penetration welds in order to achieve full base material strength.

Continuous circumferential welding is not permitted for members around the full perimeter of shafts, and such welds shall be staggered by at least 3 times the shaft diameter.

The use of rapping plates to strengthen the ends of longitudinal welds at slip joints is at the fabricators discretion.

Butt welds on flange plates and base plates shall have 100 % penetration.

Seam welds shall have a minimum penetration of 60 % except in the area of slip joints where 100 % penetration is required. The inside weld at the slip joint shall be ground back to ensure no obstruction when obtaining the desired slip lengths.

Shafts shall be centrally welded onto base plates or connecting flanges.

4.6.1 Inspection and Testing of Welds

Critical welds include circumferential welds on base plates and flange plates, and longitudinal welds within allowable overlapping zones on friction joints. The fabricator shall specify the % of critical welds and % of other welds which shall be tested in his quality plan.

Welds shall be tested by qualified level 2 inspectors in accordance with AWS D1.1. Critical welds will be tested using ultrasonic testing. Fabricators shall indicate in their quality plans the test methods used for other welds.

4.7 Quality Assurance and Inspections

The fabricator shall demonstrate the adoption and utilisation of his quality assurance system. The QA plan will include traceability of workmanship, and specifically all critical welds shall be traceable.

During the course of fabrication, Eskom may elect to conduct an inspection of completed sections. During such inspections, the following documentation should be made available for witness by the inspector:

- The fabrication QA plan
- Relevant fabrication drawings for the poles being inspected
- Relevant welding inspection results
- Certification of welders
- Mill certificates for steel

ESKOM COPYRIGHT PROTECTED

When downloaded from the WEB, this document is uncontrolled and the responsibility rests with the user to ensure it is in line with the authorized version on the WEB.

4.8 Galvanising

These structures will be used in all environments, from coastal regions to inland areas. All poles shall be hot dip galvanised on internal and external surfaces to SANS 121 / ISO 1461 and shall have a minimum coating thickness of 105 microns for coastal and heavy polluted areas applications.

The fabricator shall ensure that combinations of “Aluminium Killed Steel” and “Silicon Killed Steel” on the same galvanised sections will be avoided or will not prevent the minimum specified thickness of galvanising from being achieved.

All structures shall be suitably straightened after galvanizing without causing damage to the galvanizing surface or to the structure itself. No curved, bent or twisted structures will be accepted.

The placement of vent holes and galvanising drainage holes shall positioned appropriately, and shall not affect the structural integrity of the pole.

Double dipping shall not be allowed.

Bolts and nuts shall be manufactured in accordance with DIN EN ISO 898-1 and shall be hot dip galvanised to SANS 121 / ISO 1461. Galvanising thickness to be 105 microns minimum.

Large base plates in excess of 1.9m in diameter may be welded after galvanisation and metallised according to ISO 2063 standard with minimum mean zinc coating thickness of 120 microns.

4.9 Safety

The fabricator shall demonstrate adoption of appropriate adherence to safety in terms of the Occupational Health and Safety Act.

Workmen are expected to be equipped with appropriate personal protective equipment. Visitors to the premises should be briefed on safety issues and provided with appropriate protective equipment.

Appropriate safety related signage shall be posted in the workshop, and housekeeping within the working areas should be of acceptable standard.

In accordance with Eskom’s commitment to safety, inspectors delegated by Eskom to perform fabrication inspection will be required to pay attention and highlight any safety related issues.

5. Handling, Packing and Transport of Steel Poles

Poles need not be transported in containers, but where containers are used, due consideration shall be given to the need for open top containers, considering available offloading equipment at the point of delivery.

Unless specified otherwise, transport logistics are co-ordinated as follows: The delivery locations of poles will be specified by the erection contractor. The delivery points will be located at specific points along the line route accessible from public roads by articulated trucks. The pole supply rate shall allow for off-loading at such points. The pole erection contractor will be responsible for “last mile” delivery of poles to the actual point of erection.

The inspection and acceptance of delivered poles is performed by the pole erection contractor upon delivery. Acceptance of delivered poles does not relieve the fabricator of responsibilities required by this specification.

All structures shall be suitably stacked to avoid damage during transport. Dunnage shall be used between steel members to avoid these touching and damaging each other. No buckled, bent or twisted structures and associated bracketry will be accepted on site. The manufacturer shall deliver to site, with the structures, one Zinc-fix epoxy pack per pole for repair of small areas.

Handling and lifting of galvanised structures or components of structures shall be done with nonabrasive slings (e.g., canvas covered nylon or propylene).

ESKOM COPYRIGHT PROTECTED

When downloaded from the WEB, this document is uncontrolled and the responsibility rests with the user to ensure it is in line with the authorized version on the WEB.

6. Erection of Steel Poles

6.1 Erection Tolerances

An absolute construction 1.5% deflection limit (of pole length) applies to erected poles after stringing.

The contractor may be required to rake terminal or bend point structures that are predicted by theoretical calculation to deflect by more than 1.0% of pole length. The location and magnitude of raking on poles shall be confirmed by the line designer, based on everyday service loads at zero Pa wind, and initial conductor tensions at 15 degrees C.

Raking of poles may be achieved through tilting of base plates, tilting of the HD bolts arrangement or by adjusting tensions in stays supporting the bend structures. Practical raking guidelines are provided in.

The orientation of HD bolts and templates must be checked prior to concreting to ensure correct orientation of cross-arms.

6.2 Tightening of Bolts

HD bolts are fitted with 2 washers per bolt, placed above and below the base plate.

Exposed nuts (including those fitted to flange plates and cross-arms) shall be tightened using heavy duty anaerobic thread-locking compound such as Loctite 271, 3M TL70, or similar approved.

Unless specified otherwise, the minimum torque applied to bolts shall render a “snug tight” fit. Snug tight is defined as the tightness that exists when the plies of the joint are in firm contact. This may be obtained by the full effort of a man using an ordinary spud wrench.

6.3 Assembly of Poles

Flanged and slip joints should be aligned such that there is minimum pole deflection around the joint.

The actual slip length shall not differ more than 100mm from the designed slip length.

Slip joints shall be cleaned and soaped before assembly to ensure ease of obtaining necessary slip lengths. Oil or grease shall not be permitted for use.

The jacking load shall be specified by the pole fabricator as per section 4.9.

Slip joint compressions shall be performed by hydraulic rams capable of a 60 ton compression and tension load. The system shall make use of rigid arms capable of pulling together or pushing apart sections in the event of misalignment. The system shall have load monitoring ability.

Small repairs to damaged galvanising shall be effected by the erector preferably after assembly and prior to lifting of poles.

6.4 General Erection Requirements

Structures erected shall be plumb, or to the required raking angle, and care shall be taken to ensure that insulators are perpendicular to the direction of the line and at 180 degrees to each other on opposite sides of the structures.

Non- terminal strain poles shall be adequately back-stayed to prevent longitudinal deflections during stringing and erection.

Ladders, where installed, shall be oriented consistently in the same side of each pole on the line.

6.5 Theft prevention in High Risk Areas

Isolated instances have been reported of the theft of HD bolt nuts in informal settlements. Where Eskom elects to prevent theft in such high risk areas, additional precautions may be specified by the Project Manager.

These may include:

ESKOM COPYRIGHT PROTECTED

When downloaded from the WEB, this document is uncontrolled and the responsibility rests with the user to ensure it is in line with the authorized version on the WEB.

- On-site welding of HD nuts onto HD bolts, followed by application of zinc-rich epoxy.
- Encasement of the base plate, including the installation of 30mm weep holes allowing drainage from the pole base

7. Mechanical Testing

As indicated in SANS 10280-1:2011, fabricated tubular steel poles and members that have not undergone strength verification by full- scale testing are subject to the application of a strength factor of 0,9 which is applied to the yield stress of steel or the theoretical deflection limit (whichever governs the design).

For the purposes of this specification, the testing of the tallest pole in a series of poles utilising a common superstructure will fulfil the requirement of full scale testing.

In addition, the adoption of known test results may be applied to the strength determination for commonly used components, for example standard cross-arms.

7.1 Type Test Requirements

Testing of structures shall be done in accordance with IEC 60652: Loading tests on overhead line structures at a suitable, approved test station.

A representative from Eskom shall be invited to witness the tests.

7.2 Testing Setup

Where embedded poles are tested, the subsurface portion of the pole shall be rigidly clamped by steel or concrete cribs or similar rigid devices over the embedment depth with rubber inserts to protect the pole. The bearing block faces shall resist all longitudinal and rotational motions of the clamped portion of the pole. If this is not possible, the buried portion of the mast may be removed and the mast welded onto a base plate of adequate thickness to resist all imposed loads without deformation.

Suitable brackets shall be welded onto the test structure in order to apply the required loads at the correct positions and heights. Positions of these shall be checked by the testing facility before testing commences.

7.3 Loading

Test loads shall be applied in increments to 50%, 75%, 90%, 95% and 100% of the specified loads. These levels may change depending on designer requirements. At these levels, a deflection reading shall be taken.

Loads shall be configured on the mast as they would be configured on site giving the worst loading case scenario (i.e. the applied loads shall produce the maximum bending moments and/or crippling loads). For freestanding structures, the load simulating the wind load on the pole shall be applied to the tension face of the pole so that no structural stability is obtained from the load point. A test-loading diagram shall be submitted to Eskom for approval before the commencement of any tests.

The load applied to the pole at the time of failure shall be recorded as accurately as possible to the nearest 0,5 Newton. This shall be referred to as the failure load.

The full load shall be held for a minimum of 60 seconds and a maximum of 5 minutes before being released. Deflection readings shall be taken whilst the load is being applied and once the load has been released (to determine permanent set).

7.3.1 Load Measurements and Recording of Data

7.3.1.1 Load Measurement

A load cell or other satisfactory method of load measurement shall be used. The load measuring device shall be suitably calibrated. It shall be supported in such a way that the force required to pull it shall not add materially to the measured load on the pole and so that no damage is caused to the instrument if the pole suddenly fails under test.

ESKOM COPYRIGHT PROTECTED

When downloaded from the WEB, this document is uncontrolled and the responsibility rests with the user to ensure it is in line with the authorized version on the WEB.

7.3.1.2 Deflection Measurement

The measurement of the pole tip deflection shall be taken as the horizontal distance from the initial position of the tip of the pole to the position of the tip when load has been applied to the pole. All deflection measurements shall be made correct to the nearest 5mm. During each load increment the maximum tip deflection shall be recorded.

After a full loading cycle the permanent set shall be recorded and shall be taken correct to the nearest 5mm.

7.4 Tests and Acceptance Criteria

The structure shall be considered to have passed mechanical testing if the requirements set out in 6 are met.

Table 6: Tests and Acceptance Criteria

TEST	ACCEPTANCE CRITERIA
Working Load Test	
Working load tests apply to strain structures and terminal structures. The structure shall be subjected to loads experienced at zero Pa wind pressure, and sagging tensions after creep at the maximum line angle, or most onerous terminal condition.	Deflections shall be no greater than 2.2% of the total pole height. Permanent set shall be no greater than 1% of the total pole height. Where it can be demonstrated that the structure passes the ultimate load test, the deflection requirements may be relaxed at the engineer's discretion. The mast shall resist all working loads without showing signs of buckling or crippling. Any signs of member buckling, signs of buckling onset, connection failure or failure of any structure component shall constitute the failure of the structure.
Ultimate Load Test	
The ultimate load test shall be completed on all structures being tested and shall be executed once the working load tests are done. All load cases which determine the sizing of critical components shall be tested, in increasing order of severity. Tests shall be carried out on strong and weak planes of asymmetrical poles, where necessary. Deflection readings shall be taken whilst the load is being applied and once the load has been released.	Deflections shall be no greater than 5.5% (wind load) or 7% (broken conductor load) of the total pole height. Permanent set shall be no greater than 3% of the total pole height. Permanent local deformations such as bowing of secondary members, ovalisation of holes and permanent deformation of bolts may be accepted for the ultimate load test only. Permanent local deformations on the body of the structure may only be accepted if deflection limits are not exceeded.

ESKOM COPYRIGHT PROTECTED

When downloaded from the WEB, this document is uncontrolled and the responsibility rests with the user to ensure it is in line with the authorized version on the WEB.

8. Authorization

This document has been seen and accepted by:

Name and surname	Designation
Al' Louise Van Deventer	General Manager: Technology and Engineering
Mfundi Songo	Senior Manager: Technology and Engineering
Lucy Sangweni	High Voltage Overhead Lines Study Committee Chairperson
Heini Mocke	Overhead Powerlines Structure Care Group Convener
Pravind Orrie	Asset Creation Senior Manager - Limlanga Cluster
Brenda Cebekhulu	Asset Creation Senior Manager - Central East Cluster
Thandiwe Nkambule	Asset Creation Senior Manager - Gauteng Cluster
Cynthia Ngomane	Asset Creation Senior Manager - Gemma Cluster
Paul Matiwani	Asset Creation Senior Manager - Cape Coastal Cluster

9. Revisions

Date	Rev	Compiler	Remarks
Dec 2024	2	LS Sangweni	Corrected in text referencing and added Pole purchasing specification in Annexure A
March 2017	1	B. Branfield	Document reformatted on to new template, with new document number. No content change. This document supersedes document DSP_34-1683
March 2011	0	JP Marais	Complete document revision. Document number changed to DSP 1683.
Oct 2003	0		Original issue as SCSSCABG2.

10. Development team

The following people were involved in the latest revision of this document:

- Lucy Sangweni

11. Acknowledgements

High Voltage Overhead Powerlines Study Committee for their contribution in reviewing this document.

ESKOM COPYRIGHT PROTECTED

When downloaded from the WEB, this document is uncontrolled and the responsibility rests with the user to ensure it is in line with the authorized version on the WEB.

Annex A – Technical Schedules A / B and Deviation Schedule

(Normative)

Enquiry No.:_____ **Tenderer's name:** _____

Project Name: _____ **Date:** _____

Technical schedules A and B

Steel Mono-pole compact line towers for distribution lines

For each pole being offered a separate set of schedules shall be completed.

Schedule A: Purchaser's specific requirements

Schedule B: Guarantees and technical particulars of equipment offered

Ref.	Description	Unit	Schedule A	Schedule B
-	Location of Fabrication Plant		Specify	
-	Steel suppliers and locations		Specify	
-	Cross-arm connection type - flange / junction plate / other (specify)		Specify	
3.3	Deflection capacity			
	Ultimate wind load	%	5.5	
	Broken conductor load	%	7.0	
4.3	HD bolt grade		4.8 & 8.8	
0	HD bolt type – J-Bolt / Straight / Other (specify)		Straight	
0	Flange plates/ Base plates designed with gussets	Y/N	Y	
0	Internal earth connection allowed for	Y/N	Y	
4.7	Ladder system compliant	Y/N	Y	
4.9	Jacking system compliant	Y/N	Y	
4.4	Max pole slenderness	Ratio	Specify	
4.4	Max section length	m	13	
	Max Base Dia.	m		
4.2	Steel plate grade	MPa	See Design	
4.2	Steel plate toughness (Charpy V-notch capacity)	J @ ^{o}C	27 J at -0^{0}C	
0	% of critical welds tested	%	Specify	
0	% of other welds tested	%	Specify	

Enquiry No.: _____ **Tenderer's name:** _____

Project Name: _____ **Date:** _____

Steel Mono-pole compact line towers for distribution lines

Deviation Schedule

ESKOM COPYRIGHT PROTECTED

When downloaded from the WEB, this document is uncontrolled and the responsibility rests with the user to ensure it is in line with the authorized version on the WEB.

Any deviations offered to this specification shall be listed below with reasons for deviation. In addition, evidence shall be provided that the proposed deviation will at least be more cost-effective than that specified by Eskom

Item	Clause	Proposed deviation

ESKOM COPYRIGHT PROTECTED

When downloaded from the WEB, this document is uncontrolled and the responsibility rests with the user to ensure it is in line with the authorized version on the WEB.

Any deviations offered to submitted pole designs shall be listed below with reasons for deviation.		
Pole	Component	Proposed deviation

ESKOM COPYRIGHT PROTECTED

When downloaded from the WEB, this document is uncontrolled and the responsibility rests with the user to ensure it is in line with the authorized version on the WEB.

Pole Purchasing Specifications													
Last Name:													
Conductor:							**S/Wire 1:**				**S/Wire 2:**		
Line	**Qty**	**SAP No.**	**Title**	**ESKOM GA Drawing No.**	**Manufacturer GA Drawing No.**	**Length**	**Strain/Int/ Susp**	**Planting Depth**	**Spacing E/Phase**	**Spacing Ph/Ph**	**S/Wire brckt DBL/Single**	**Wind span**	**Weight Span**
1													
2													
3													
4													
5													
6													
7													
8													
9													
10													
Design Codes: SANS 10280 and ESKOM Specification 240-75883378													
Manufacturer to supply according to SAP No. description or/									Y	N	✓ Correct Answer		
Manufacturer to design and supply according to loading specifications and span criteria above:									Y	N			
*For fully type tested poles the manufacturer may use a steel strength factor of 1.0 and for untested poles a strength factor of 0.9 must be used													
Comments:													

ESKOM COPYRIGHT PROTECTED

When downloaded from the WEB, this document is uncontrolled and the responsibility rests with the user to ensure it is in line with the authorized version on the WEB.

Annex B – Typical J-Bolt design for Gr. 4.8 J-bolts

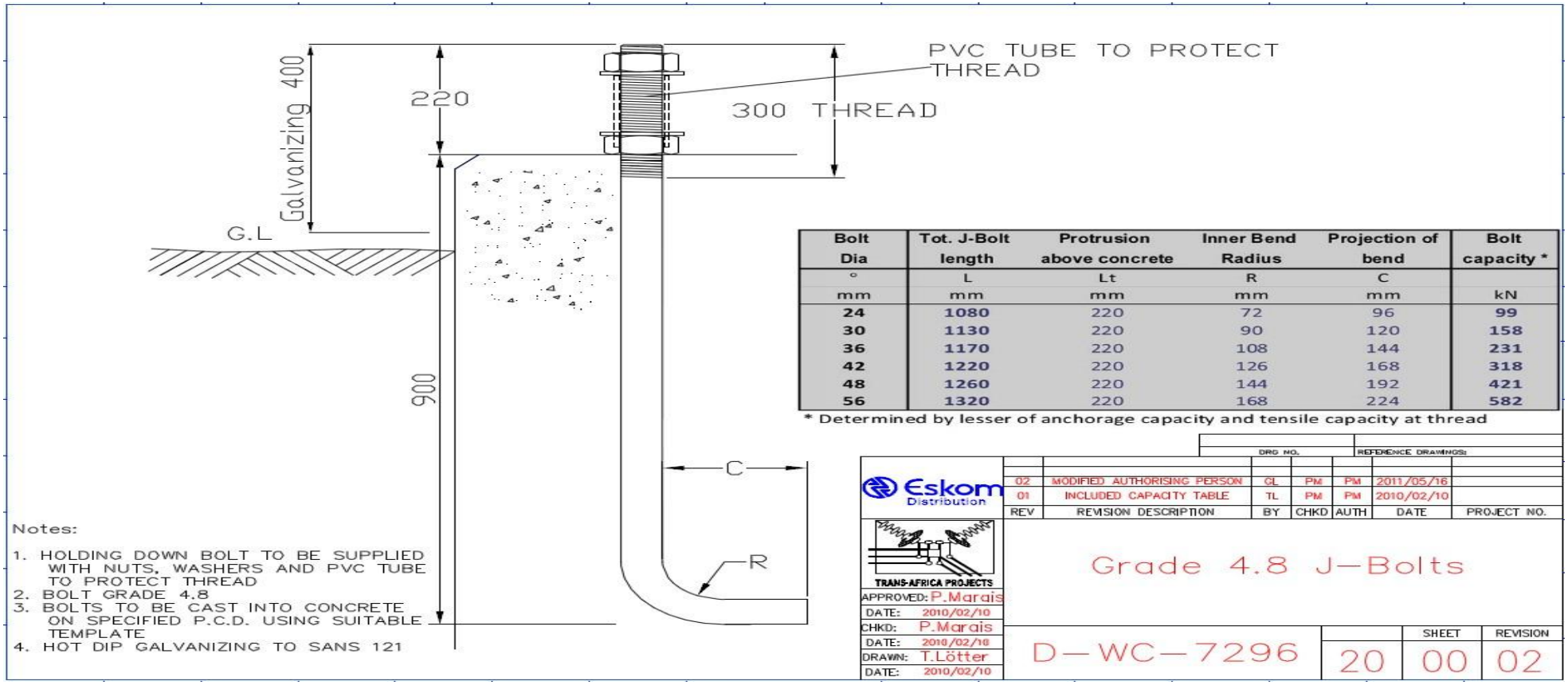

Bolt Dia	Tot. J-Bolt length	Protrusion above concrete	Inner Bend Radius	Projection of bend	Bolt capacity *
°	L	Lt	R	C	
mm	mm	mm	mm	mm	kN
24	**1080**	220	72	96	**99**
30	**1130**	220	90	120	**158**
36	**1170**	220	108	144	**231**
42	**1220**	220	126	168	**318**
48	**1260**	220	144	192	**421**
56	**1320**	220	168	224	**582**

* Determined by lesser of anchorage capacity and tensile capacity at thread

Notes:

1. HOLDING DOWN BOLT TO BE SUPPLIED WITH NUTS, WASHERS AND PVC TUBE TO PROTECT THREAD
2. BOLT GRADE 4.8
3. BOLTS TO BE CAST INTO CONCRETE ON SPECIFIED P.C.D. USING SUITABLE TEMPLATE
4. HOT DIP GALVANIZING TO SANS 121

Eskom Distribution

TRANS-AFRICA PROJECTS

APPROVED:	P.Marais
DATE:	2010/02/10
CHKD:	P.Marais
DATE:	2010/02/10
DRAWN:	T.Lötter
DATE:	2010/02/10

DRG NO. | REFERENCE DRAWINGS:

REV	REVISION DESCRIPTION	BY	CHKD	AUTH	DATE	PROJECT NO.
02	MODIFIED AUTHORISING PERSON	GL	PM	PM	2011/05/16	
01	INCLUDED CAPACITY TABLE	TL	PM	PM	2010/02/10	

Grade 4.8 J–Bolts

D–WC–7296 | SHEET 20 | REVISION 00 02

ESKOM COPYRIGHT PROTECTED

When downloaded from the WEB, this document is uncontrolled and the responsibility rests with the user to ensure it is in line with the authorized version on the WEB.

Annex C – Typical Holding-down Bolt Arrangement and Earth Connection

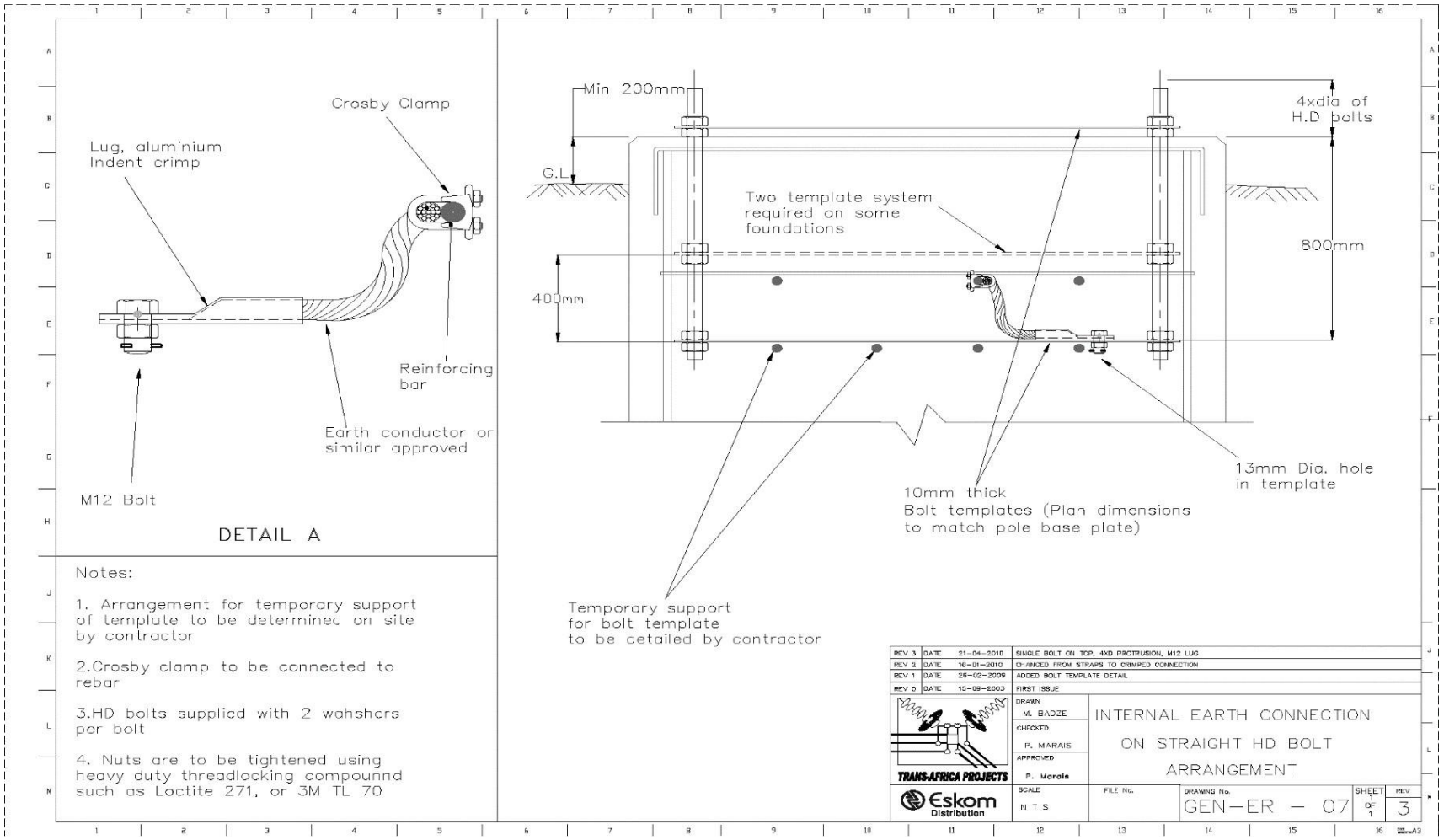

ESKOM COPYRIGHT PROTECTED

When downloaded from the WEB, this document is uncontrolled and the responsibility rests with the user to ensure it is in line with the authorized version on the WEB.

Annex D – Annex D – Earth lug for accommodation of additional earthing

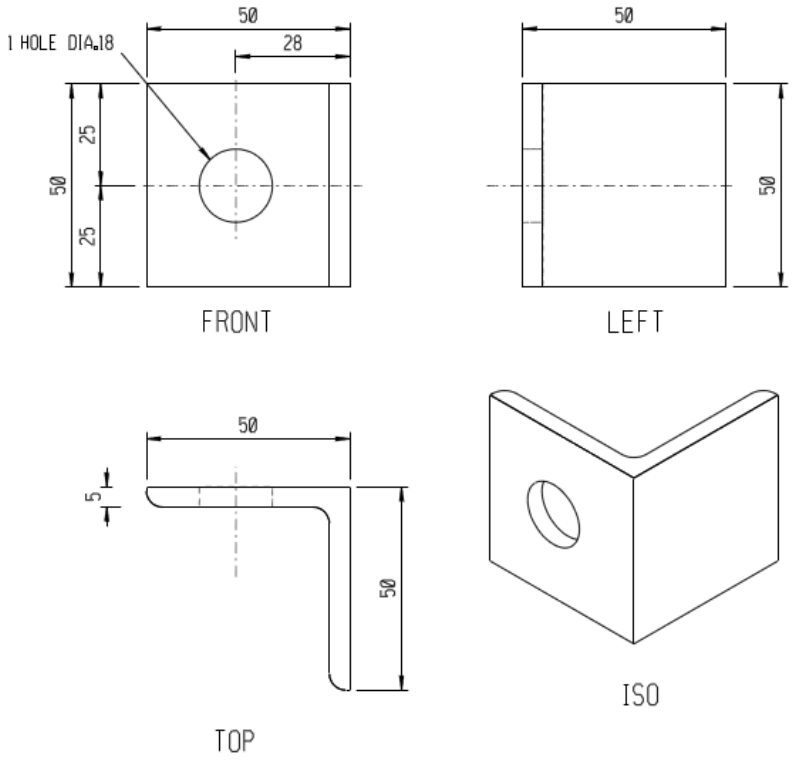

EARTH BRACKET



ESKOM COPYRIGHT PROTECTED

When downloaded from the WEB, this document is uncontrolled and the responsibility rests with the user to ensure it is in line with the authorized version on the WEB.

Annex E – Typical Jacking System Lug Arrangement

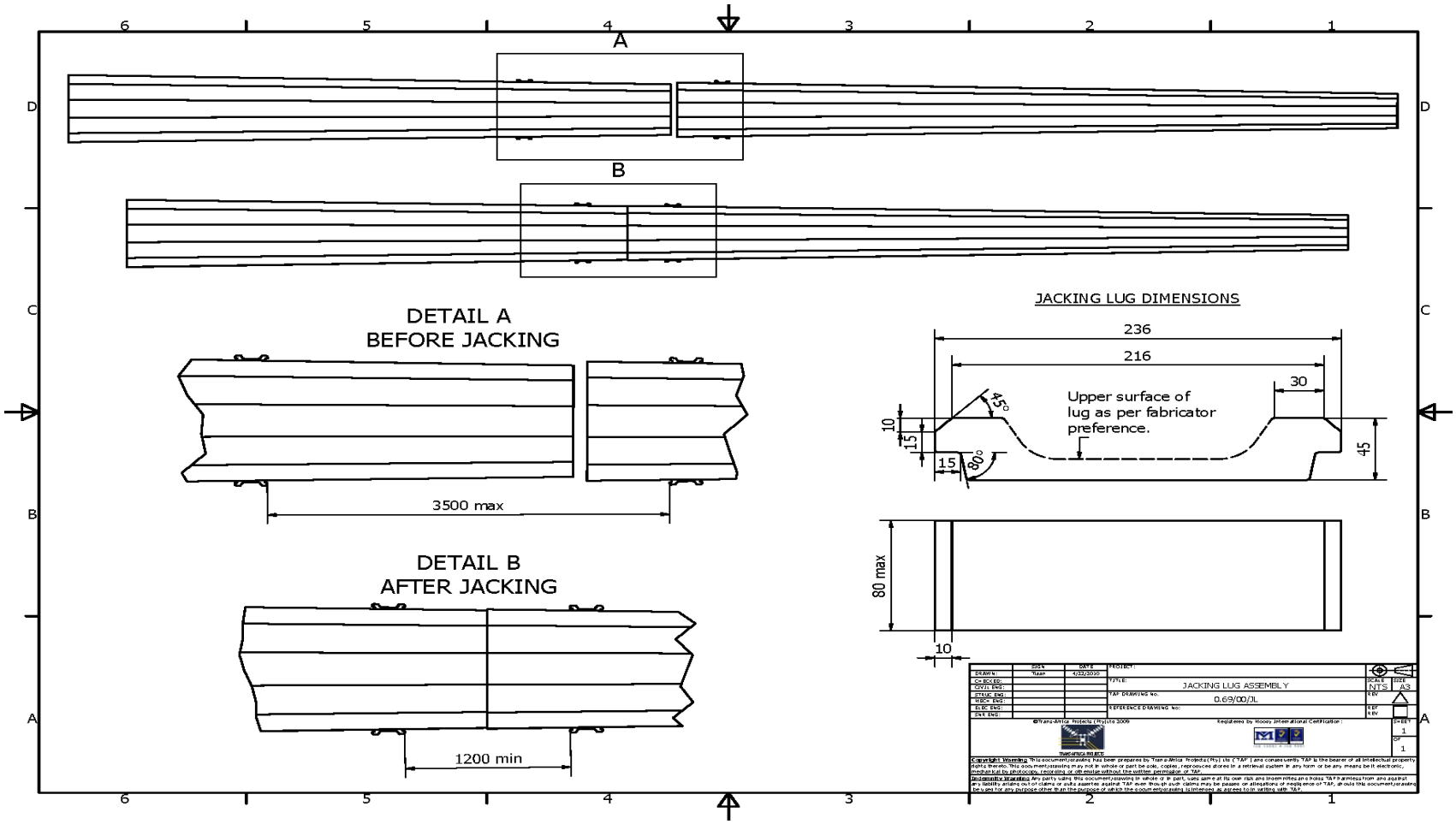

ESKOM COPYRIGHT PROTECTED

When downloaded from the WEB, this document is uncontrolled and the responsibility rests with the user to ensure it is in line with the authorized version on the WEB.

Annex F – Pole Fabrication Inspection Checklist

Project:		**Fabricator:**	

Item	**x□/□/ Result?**
Appearance and Pole Geometry	
External surface free from steel splinters and welding splatter	
Galvanising thickness: Min. 105 microns (for both thin and thick walled sections)	..... µm
Mean outside diameters, measured at slip joint level:± 0.5 % with ± 2 mm minimum	..... %
Ovalisation: 2 measurements taken between two perpendicular diameters at slip joint level : less than 3 % [(Dmax-Dmin)/Dmax < 3 %] Dmax:…….mm Dmin ..... mm	..... %
Length of pole sections: ± 50 mm	..... mm
Members Straightness: less than 0.3 % of 1 meter member length (3 mm per meter).	..... mm
Marking	
Min. and max. splice length neatly marked with 300mm x 20mm white paint strips	
Base section marking plate: Manufacturers name, structure design code and date of manufacture	
Orientation of cross-arms w.r.t. base marked on base plate and upper non-embedded template	
Steel Certification	
Steel mill certificates kept on record:	
Yield stress	..... MPa
Toughness (Charpy test results) 27 J at 0°C	..... J
Si or Al Killed steel used	
Traceability between fabricated product and mill certificates demonstrated	
Welding	
Weld inspection certificates: 100% of critical welds and 10% of other welds	
Weld inspector demonstration conducted during inspection	
HD bolts	
HD bolts with grades higher than 4.8 shall be stamped to indicate the bolt grade	
HD bolts galvanising to 200mm below embedment level	
Transport of poles	
Poles adequately secured	
Adequately protected against damage during transit and off loading	
Transporter equipped with adequate slings with capacity and damage prevention to galvanising	

ESKOM COPYRIGHT PROTECTED

When downloaded from the WEB, this document is uncontrolled and the responsibility rests with th
to ensure it is in line with the authorized version on the WEB.

Project:		**Fabricator:**	
Item			**x□/□/ Result?**
Safety			
Use of PPE			
PPE available to visitors			
Workshop Signage			
Workshop housekeeping			
Quality Assurance			
Evidence of QA plan adoption demonstrated			
Traceability of workmanship demonstrated			
Relevant fabrication drawings made available for inspection			
Coded welding personnel certification			
Pole fabricated as per drawing, incl. lifting lugs, jacking lugs, attachment points			
Inspected by:		**Date:**	

ESKOM COPYRIGHT PROTECTED

When downloaded from the WEB, this document is uncontrolled and the responsibility rests with th
to ensure it is in line with the authorized version on the WEB.

Annex G – Standard 132kV Keyhole attachments for post insulators

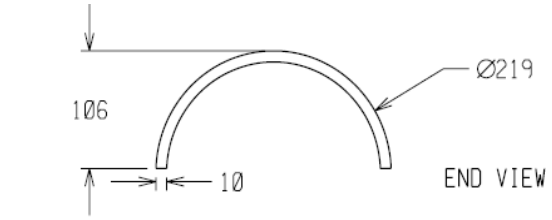

219 X 10 CIRCULAR HOLLOW SECTION
CUT LENGTHWISE
WITH 8MM ALLOWANCE FOR FLAME CUTTING

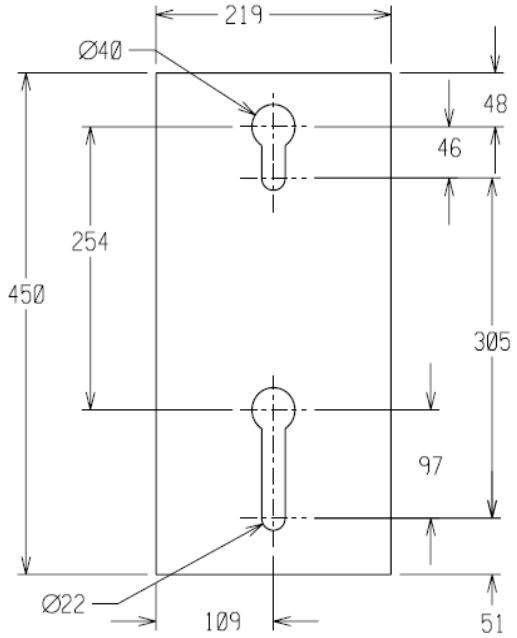

CIRCULAR TYPE BRACKET

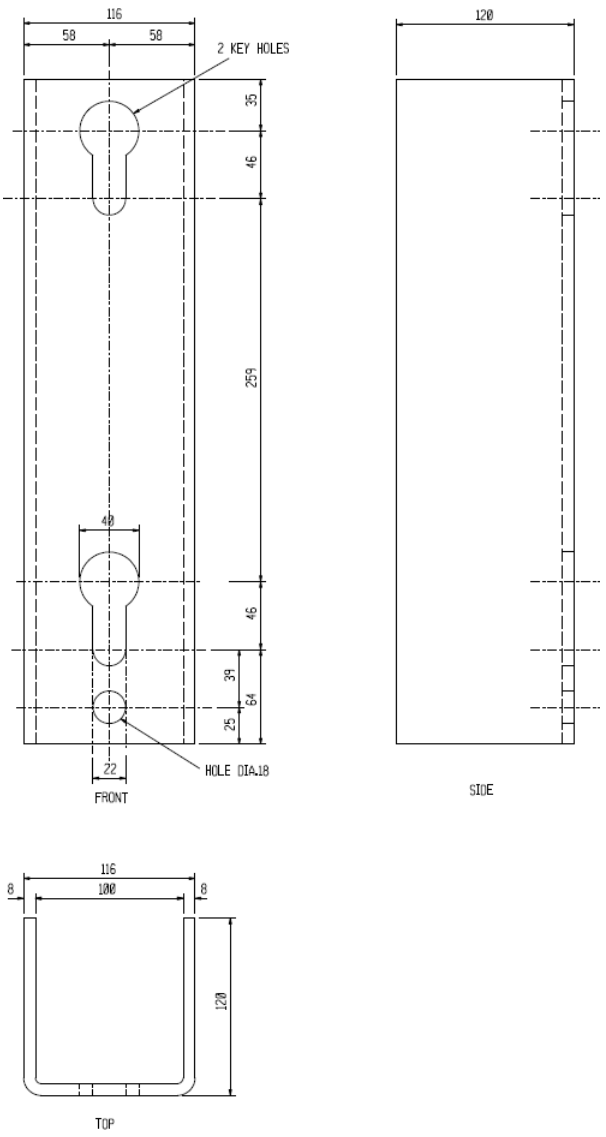

SQUARE TYPE BRACKET

ESKOM COPYRIGHT PROTECTED

When downloaded from the WEB, this document is uncontrolled and the responsibility rests with th
to ensure it is in line with the authorized version on the WEB.

Annex H – Typical OPGW Down-lead Lug Arrangement

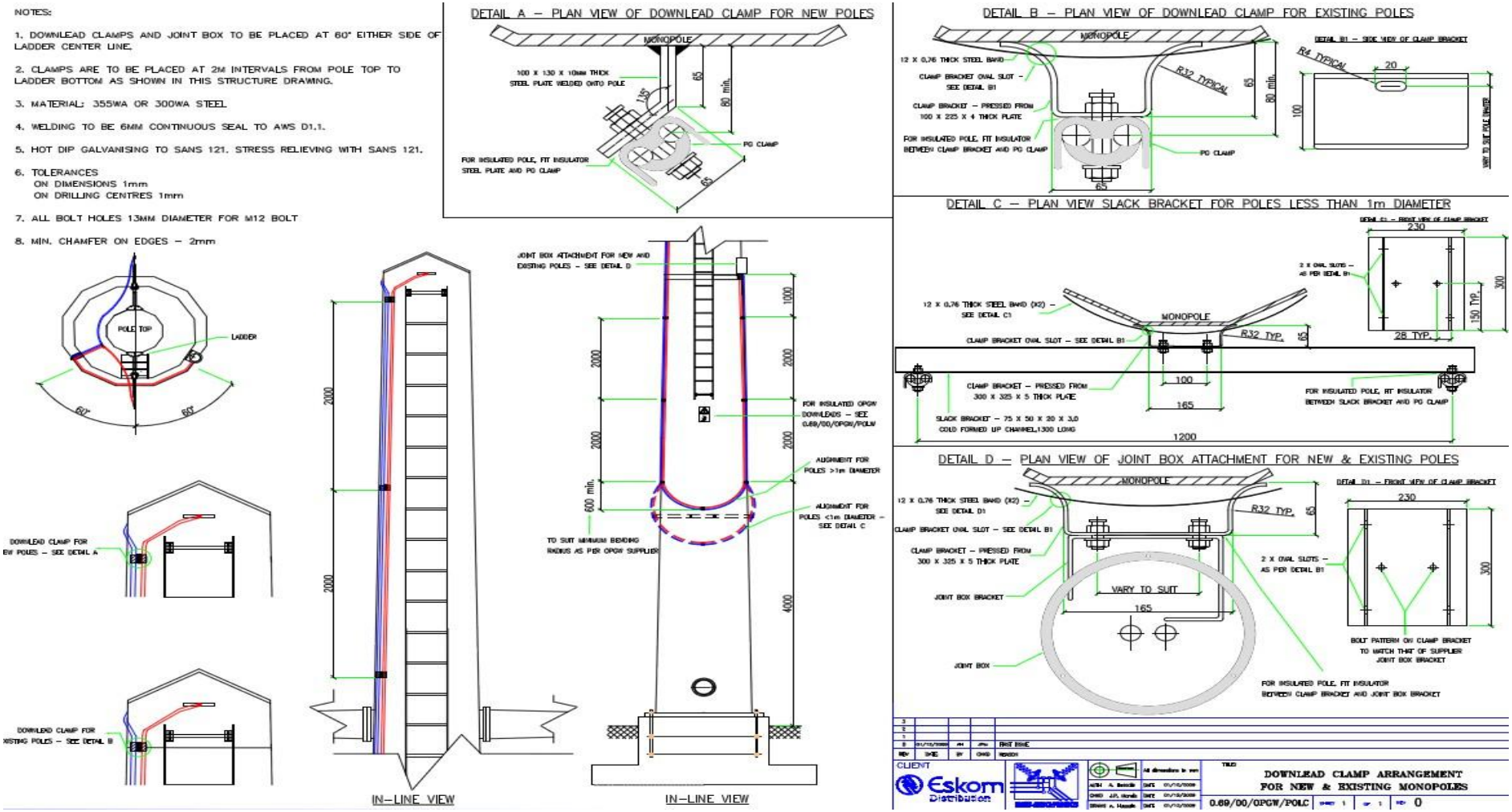

ESKOM COPYRIGHT PROTECTED

When downloaded from the WEB, this document is uncontrolled and the responsibility rests with the user to ensure it is in line with the authorized version on the WEB.

Annex I – Practical Raking Guidelines

Suggested Methodology (Contractor to verify):

1) The structures shall be raked in the direction opposite to the line of deflection:

   a) For angle strain structures, the pole must be raked away from the line deviation angle in the direction of the outside cross arm.

   b) For terminal poles, the rake must be opposite the direction of the out-going tension span of the terminal structure.

2) The raking angle shall be prescribed by the engineer.

3) Required equipment:

   - Straight edge;
   - Spirit level;
   - Variable height packing.

4) Set out the template by adjusting the 4 nuts that lie on the X axis (See Figure I1) until the desired angle of raking is reached. This is done as follows:

   a) Set all nuts at same level. Verify level with a spirit level and straight edge. Ensure enough length on the bolts remains for base plate and top nut.

   b) Raise the one set of nuts by the distance Δ_z so that the required raking angle will be achieved.

   c) Insert packing equal in height to Δ_z to measure the raking angle, as shown below. (The spirit level will be level if the straight edge and the packing are placed on the PCD line of the template).

   d) Bring all the other bottom level nuts up to the template.

   e) Erect tower so that the base plate is resting on top of nuts and tighten top nuts in place.

5) Verify that structure is off plumb by the specified amount. If not, re-setting the bottom nuts will be required.

ESKOM COPYRIGHT PROTECTED

When downloaded from the WEB, this document is uncontrolled and the responsibility rests with the user to ensure it is in line with the authorized version on the WEB.

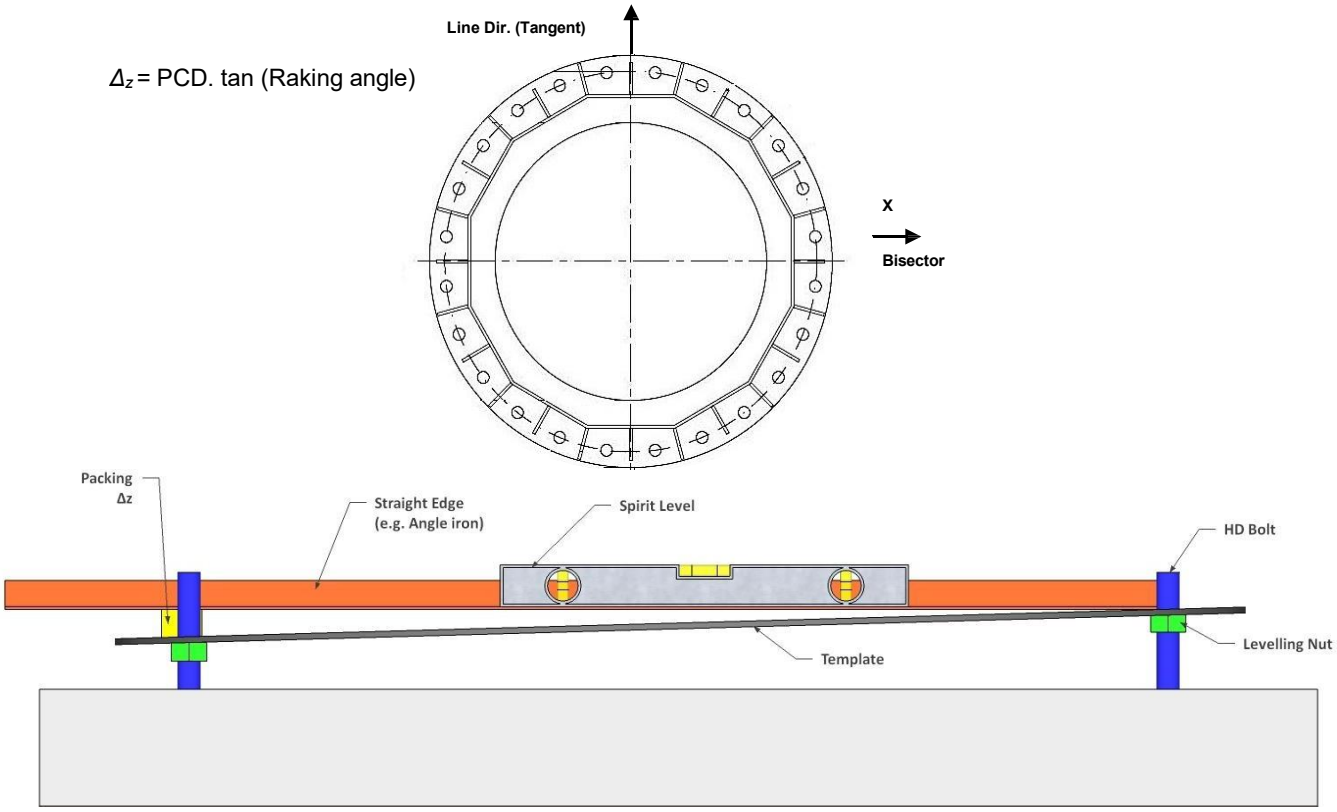

Figure I.1: Layout and adjustment of base plate for raking

ESKOM COPYRIGHT PROTECTED

When downloaded from the WEB, this document is uncontrolled and the responsibility rests with the user to ensure it is in line with the authorized version on the WEB.

Annex J – Removable steps

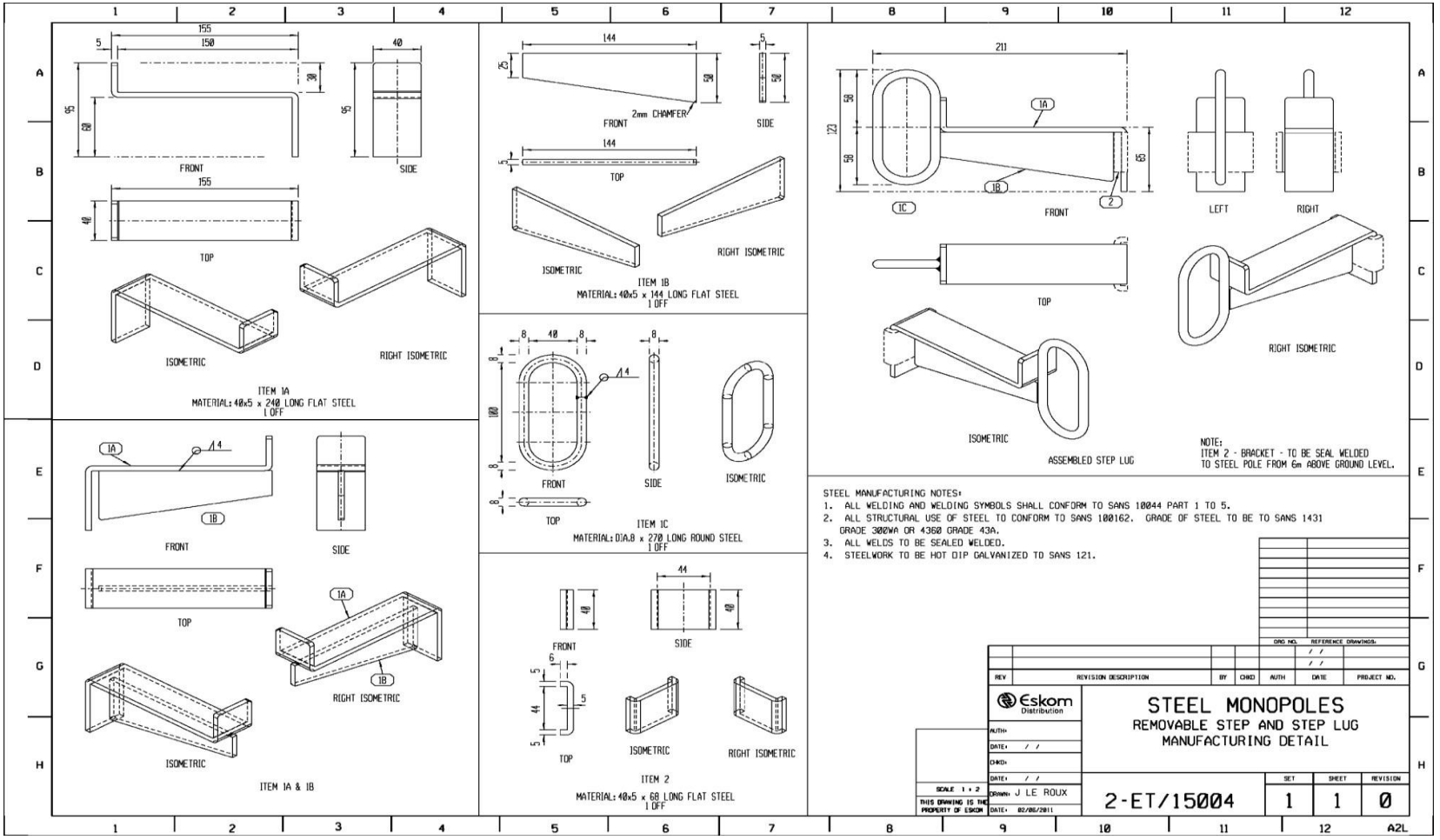

ESKOM COPYRIGHT PROTECTED

When downloaded from the WEB, this document is uncontrolled and the responsibility rests with the user to ensure it is in line with the authorized version on the WEB.