DEPARTMENT OF PUBLIC WORKS AND INFRASTRUCTURE

INSTALLATION OF BACKUP GENERATORS
MSINGA, NQUTHU AND NEW HANOVER MAGISTRATE COURT

public works & infrastructure
Department:
Public Works and Infrastructure
REPUBLIC OF SOUTH AFRICA

Comprising of:

Section 1 - Preliminaries and General

Section 2 - Msinga Generator Installation

Section 3 - Msinga Electrical Installation

Section 4 - Msinga Structural Installation

Section 5 - Nquthu Generator Installation

Section 6 - Nquthu Electrical Installation

Section 7 - Nquthu Structural Installation

Section 8 - New Hanover Generator Installation

Section 9 - New Hanover Electrical Installation

Section 10 - New Hanover Structural Installation

Section 11 - Final Summary

Department:
Public Works and Infrastructure
REPUBLIC OF SOUTH AFRICA

GEBERATOR INSTALLATION AT MSINGA, NQUTHU AND NEW HANOVER COURTS
ELECTRICAL ENGINEERING SERVICES

ITEM NO	DESCRIPTION	UNIT	QTY	RATE	AMOUNT
	PART 1A: PRELIMINARY AND GENERAL				
	The agreement is to be the General Conditions of Contract (GCC 2015) (Third Edition), Published by the SA Institution of Civil Engineering.				
	The preliminaries are to be the Construction and management requirements for works contracts - Part 1: General engineering and construction works (SANS 1921 -1: 2004 Edition 1) prepared by Standards South Africa and shall be deemed to be incorporated herein.				
	Tenderers are referred to the abovementioned documents for the full intent and meaning of each clause thereof (hereinafter referred to by heading and clause number only) for which such allowance must be made as may be considered necessary.				
	Where standard clauses or alternatives are not entirely applicable to this contract such modifications, corrections or supplements as will apply are given under each relevant clause heading.				
	Where any item is not relevant to this specific contract such items is marked N/A (signifying "not applicable").				
	Adjustment of the preliminaries: each item priced, is to be allocated to one or more of the three categories, where "F" denotes a fixed amount (amount not to be varied), "V" denotes an amount variable in proportion to value and "T" denotes an amount in proportion to time.				
	Time (T) related Preliminaries will only be adjusted for omissions or additions, issued by the Employer, or delays caused by the Employer, for which variation and extension of time has been granted.				
	SECTION A: GENERAL CONDITIONS OF CONTRACT				
A1	General (Clause 1)				
	F: ..... V: ..... T:	Item			
A2	Basis of Contract (Clause 2)				
	F: ..... V: ..... T:	Item			
A3	Engineer (Clause 3)				
	F: ..... V: ..... T:	Item			
A4	Contractor's General Obligation (Clause 4)				
	F: ..... V: ..... T:	Item			
A5	Time and Related Matters (Clause 5)				
	F: ..... V: ..... T:	Item			
				CARRIED FORWARD	

Department:
Public Works and Infrastructure
REPUBLIC OF SOUTH AFRICA

GEBERATOR INSTALLATION AT MSINGA, NQUTHU AND NEW HANOVER COURTS
ELECTRICAL ENGINEERING SERVICES

ITEM NO	DESCRIPTION	UNIT	QTY	RATE	AMOUNT
				BROUGHT FORWARD	
A6	Payment and Related Matters (Clause 6)				
	F: ..... V: ..... T:	Item			
A7	Quality and Related Matters (Clause 7)				
	F: ..... V: ..... T:	Item			
A8	Risk and Related Matters (Clause 8)				
	F: ..... V: ..... T:	Item			
A9	Termination of Contract (Clause 9)				
	F: ..... V: ..... T:	Item			
A10	Claims and Disputes (Clause 10)				
	F: ..... V: ..... T:	Item			
	SECTION B: SANS 1921-1:2004 (Edition 1):				
	CONSTRUCTION AND MANAGEMENT				
	REQUIREMENTS FOR WORKS CONTRACTS: PART 1				
B1	Scope				
	F: ..... V: ..... T:	Item			
B2	Normative references				
	F: ..... V: ..... T:	Item			
B3	Definitions				
	F: ..... V: ..... T:	Item			
B4	Requirements for construction and management				
	F: ..... V: ..... T:	Item			
B4.1	General				
	F: ..... V: ..... T:	Item			
B4.2	Responsibilities for design and construction				
	F: ..... V: ..... T:	Item			
B4.3	Planning, programme and method statements				
	F: ..... V: ..... T:	Item			
B4.3	Planning, programme and method statements				
	F: ..... V: ..... T:	Item			
B4.4	Quality assurance				
	F: ..... V: ..... T:	Item			
				CARRIED FORWARD	

Department:
Public Works and Infrastructure
REPUBLIC OF SOUTH AFRICA

GEBERATOR INSTALLATION AT MSINGA, NQUTHU AND NEW HANOVER COURTS
ELECTRICAL ENGINEERING SERVICES

ITEM NO	DESCRIPTION	UNIT	QTY	RATE	AMOUNT
				BROUGHT FORWARD	
B4.5	Settling out				
	F: ..... V: ..... T:	Item			
B4.6	Management and disposal of water				
	F: ..... V: ..... T:	Item			
B4.7	Blasting				
	F: ..... V: ..... T:	Item			
B4.8	Works adjacent to services and structures				
	F: ..... V: ..... T:	Item			
B4.9	Management of the works and site				
	F: ..... V: ..... T:	Item			
B4.10	Earthworks				
	F: ..... V: ..... T:	Item			
B4.11	Testing				
	F: ..... V: ..... T:	Item			
B4.12	Materials, samples and fabrication drawings				
	F: ..... V: ..... T:	Item			
B4.13	Equipment				
	F: ..... V: ..... T:	Item			
B4.14	Site establishment				
	F: ..... V: ..... T:	Item			
B4.15	Survey control				
	F: ..... V: ..... T:	Item			
B4.16	Temporary works				
	F: ..... V: ..... T:	Item			
B4.17	Existing services				
	F: ..... V: ..... T:	Item			
B4.18	Health and safety				
	F: ..... V: ..... T:	Item			
				CARRIED FORWARD	

Department:
Public Works and Infrastructure
REPUBLIC OF SOUTH AFRICA

GEBERATOR INSTALLATION AT MSINGA, NQUTHU AND NEW HANOVER COURTS
ELECTRICAL ENGINEERING SERVICES

ITEM NO	DESCRIPTION	UNIT	QTY	RATE	AMOUNT
				BROUGHT FORWARD	
B4.19	Environmental requirements				
	F: ..... V: ..... T:	Item			
B4.20	Alterations, additions, extensions and modifications to existing works				
	F: ..... V: ..... T:	Item			
B4.21	Inspection of adjoining structures, services, buildings and property.				
	F: ..... V: ..... T:	Item			
B4.22	Attendance on nominated and selected subcontractors				
	F: ..... V: ..... T:	Item			N/A
	SECTION C: SCOPE OF WORK IN ACCORDANCE WITH SANS 10403				
	(The reference to clauses refer to table B.1 of SANS 1921-1:2004)				
C1	Certification by recognised bodies - (Clause 4.4)				
	F: ..... V: ..... T:	Item			
C2	Agreement - (Clause 4.5)				
	F: ..... V: ..... T:	Item			
C3	Other services and facilities - (Clause 4.8)				
	F: ..... V: ..... T:	Item			
C4	Recording of weather - (Clause 5.2)				
	F: ..... V: ..... T:	Item			
C5	Management meetings - (Clause 5.3)				
	F: ..... V: ..... T:	Item			
C6	Daily records - (Clause 5.6)				
	F: ..... V: ..... T:	Item			
C7	Permits - (Clause 5.9)				
	F: ..... V: ..... T:	Item			
C8	Proof of compliance with the law - (Clause 5.10)				
	F: ..... V: ..... T:	Item			
				CARRIED FORWARD	

Department: Public Works and Infrastructure
REPUBLIC OF SOUTH AFRICA

GEBERATOR INSTALLATION AT MSINGA, NQUTHU AND NEW HANOVER COURTS
ELECTRICAL ENGINEERING SERVICES

ITEM NO	DESCRIPTION	UNIT	QTY	RATE	AMOUNT
				BROUGHT FORWARD	
	SECTION D: SPECIFICATION DATA ASSOCIATED				
	WITH SANS 1921-1:2004 (Table A.1)				
D1	Requirements for drawings, information and calculations				
	for which the contractor is responsible - (Clause 4.1.7)				
	F: ..... V: ..... T:	Item			
D2	The planning, programme and method statements-				
	(Clause 4.3)				
	F: ..... V: ..... T:	Item			
D3	Samples of materials. Workmanships and finishes -				
	(Clause 4.12.1)				
	F: ..... V: ..... T:	Item			
D4	Fabrication drawings that the contractor is to provide				
	and deliver to the employer - (Clause 4.12.2)				
	F: ..... V: ..... T:	Item			
D5	Office for the foreman - (Clause 4.14.3)				
	F: ..... V: ..... T:	Item			
D6	Telephone - (Clause 4.14.3)				
	F: ..... V: ..... T:	Item			
D7	Office for inspector of works - (Clause 4.14.3)				
	F: ..... V: ..... T:	Item			N/A
D8	Telephone in office for inspector of works -				
	(Clause 4.14.3)				
	F: ..... V: ..... T:	Item			N/A
D9	Provision and erection of signboards - (Clause 4.14.6)				
	F: ..... V: ..... T:	Item			N/A
D10	Termination, diversion or maintenance of existing				
	services - (Clause 4.17.1)				
	F: ..... V: ..... T:	Item			
D11	Services which are known to exist - (Clause 4.17.3)				
	F: ..... V: ..... T:	Item			
D12	Detection apparatus - (Clause 4.17.4)				
	F: ..... V: ..... T:	Item			
				CARRIED FORWARD	

Department: Public Works and Infrastructure
REPUBLIC OF SOUTH AFRICA

GEBERATOR INSTALLATION AT MSINGA, NQUTHU AND NEW HANOVER COURTS
ELECTRICAL ENGINEERING SERVICES

ITEM NO	DESCRIPTION	UNIT	QTY	RATE	AMOUNT
				BROUGHT FORWARD	
D13	Additional health and safety requirements -				
	(Clause 4.18)				
	F: ..... V: ..... T:	Item			
	SECTION E: SPECIFIC PRELIMINARIES				
	(Section E contains specific preliminaries items which				
	apply to this contract except where "N/A" (Not applicable)				
E1	**WORKING OVER THE WEEKEND**				
	Contractor to make allowance to work over the				
	weekend in order to allow for the disconnection of				
	utilities and the connection of the generator. The				
	weekend to be used for disconnection and connection				
	and must be communicated to the Department two				
	weeks in advance.				
	F: ..... V: ..... T:	Item			
E2	**SITE INSTRUCTIONS**				
	Site instructions issued on site are to be recorded in				
	triplicate in a Site Instruction book which is to be m				
	maintained on site by the Contractor				
	F: ..... V: ..... T:	Item			
E3	**PLANT RECORD**				
	At every site meeting, the Contractor shall provide the				
	Engineer/Principal agent with a written record, in				
	schedule form, reflecting the number, type and capacity				
	of all plant, excluding hand tools, currently used on the				
	works.				
	F: ..... V: ..... T:	Item			
E4	**SITE OFFICE**				
	The Contractor is to allow for the provision and removal				
	of a site office in accordance with the Principal Agent's				
	requirements. To accommodate 6 persons.				
	F: ..... V: ..... T:	Item			
E5	**TRADE NAMES**				
	Wherever a Trade Name for any product has been				
	described in the Bill of Quantities, the Bidder's attention				
	is drawn to the fact that any other product of equal quality				
	may be used, subject to the written approval of the				
	Principal Agent being obtained prior to the closing date				
	for the submission of the Bids.				
	F: ..... V: ..... T:	Item			
				CARRIED FORWARD	

Department:
Public Works and Infrastructure
REPUBLIC OF SOUTH AFRICA

GEBERATOR INSTALLATION AT MSINGA, NQUTHU AND NEW HANOVER COURTS
ELECTRICAL ENGINEERING SERVICES

ITEM NO	DESCRIPTION	UNIT	QTY	RATE	AMOUNT
				BROUGHT FORWARD	
E6	**INACCURATE AND DEFECTIVE WORK EXECUTED**				
	UNDER PREVIOUS CONTRACT				
	The contractor shall, after taking possession of the site				
	and before commencing the work, check all levels, liners,				
	profiles and the like and satisfy himself as to the				
	dimensional accuracy of all work executed under the				
	previous contract which may affect his work.				
	Should any inaccurate or detective work be found, the				
	contractor shall immediately notify the principal agent				
	in writing requesting his instructions with regard thereto				
	and afford every facility to those rectifying such				
	inaccurate or defective work.				
	F: ..... V: ..... T:	Item			
E7	**VIEWING THE SITE IN SECURITY AREAS**				
	If the site is situated in a security area and the bidder				
	must arrange with the Authorities to obtain permission				
	to enter the site for Bidding purposes.				
	F: ..... V: ..... T:	Item			
E8	**COMMENCEMENT OF WORKS IN SECURITY AREAS**				
	If the works falls within a security area, the contractor				
	must arrange with the Authorities and give the				
	necessary notices before commencement of the works.				
	Should the contractor fail to make such arrangements,				
	admission to the site may be refused and any additional				
	costs will be for the contractor's account.				
	F: ..... V: ..... T:	Item			
E9	**ENTRANCE PERMITS TO SECURITY AREAS**				
	If the works falls within a security area, the contractor				
	shall obtain entrance permits for his personnel and				
	workmen entering the area and shall comply with all				
	regulations and instructions which be issued from the				
	time to time regarding the protection of persons and				
	property under the control of the Authority.				
	F: ..... V: ..... T:	Item			
E10	**PROHIBITION ON TAKING PHOTOGRAPHS**				
	In terms of article 119 of the Defence Act, 44 of 1957,				
	it is prohibited to sketch or to take photographs of any				
	military site or installation or any building or civil works				
	thereon or to be in possession of a camera or other				
	apparatus used for taking photographs, except when				
	authorised thereto by or on behalf of the Minister				
	The same prohibition is also applicable to all				
	Correctional Institutions in terms of article 44.1 of the				
	Correctional Services Act 8 of 1959.				
	F: ..... V: ..... T:	Item			
				CARRIED FORWARD	

Department:
Public Works and Infrastructure
REPUBLIC OF SOUTH AFRICA

GEBERATOR INSTALLATION AT MSINGA, NQUTHU AND NEW HANOVER COURTS
ELECTRICAL ENGINEERING SERVICES

ITEM NO	DESCRIPTION	UNIT	QTY	RATE	AMOUNT
				BROUGHT FORWARD	
E11	**TOILET FACILITIES**				
	Allow for the supply and removal of portable toilet				
	facilities. The contractor is to maintain the cleanliness				
	of the facilities throughout the contract period. The				
	contractor must provide enough toilets for his/her entire				
	workforce.				
	F: ..... V: ..... T:	Item			
E12	**MANAGEMENT OF WATER**				
	Water for Construction purposes must be obtained from				
	alternative water sources (i.e. supply other than water				
	that is produced and distributed by a regulated water				
	service authority from a licensed water treatment works				
	for human consumption), e.g. dams, rivers, boreholes,				
	springs, rainwater harvesting, recycled sewerage water,				
	etc. The alternative water source shall not be of an				
	inferior quality/ standard than that required for				
	construction purposes. The client reserves the right				
	through his agents to test such supplies or request				
	certificates confirming the grade and nature of the water				
	supply. Relevant knowledge of the respective area will				
	be an advantage.				
	F: ..... V: ..... T:	Item			
E13	**OCCUPATIONAL HEALTH AND SAFETY ACT &**				
	CONSTRUCTION REGULATIONS				
	It is required of the Contractor to thoroughly study the				
	Health and Safety specification that must be read				
	together with and is deemed to be incorporated under				
	this section of the Bill of Quantities. Provision for pricing				
	thereof is made under items E12.1 to E12.15 hereafter				
	and it is explicitly pointed out that all requirements of the				
	aforementioned specification are deemed to be priced				
	hereunder, as the said items represent the only method				
	of measurement and no additional items or extras to the				
	contract in this regard shall be entertained.				
	The contractor must take note that compliance with the				
	Occupational Health and Safety Act, Construction				
	Regulations and Health and Safety specification is				
	compulsory. In the event of partial or total non-				
	compliance, the Principal Agent , notwithstanding the				
	provisions of Clause 6 of Section 1: Preliminaries				
	(Part A) or any other clause to the contrary, reserves				
	the right to delay issuing any progress payment				
	certificate until the Contractor provides satisfactory				
	proof of compliance. The Contractor shall not be entitled				
	to any compensation of whatsoever nature, including				
	interest, due to such delay of payment.				
	All references hereafter are to Regulations of the				
	Construction Regulations, 2003 issued under the				
	Occupational Health and Safety Act, 1993 (Act No 85 of				
	1993).				
				CARRIED FORWARD	

Department: Public Works and Infrastructure
REPUBLIC OF SOUTH AFRICA

GEBERATOR INSTALLATION AT MSINGA, NQUTHU AND NEW HANOVER COURTS
ELECTRICAL ENGINEERING SERVICES

ITEM NO	DESCRIPTION	UNIT	QTY	RATE	AMOUNT
				BROUGHT FORWARD	
	The contractor shall, in submitting his bid, demonstrate				
	that he has made provision for the cost of compliance				
	with the specified health and safety requirements, the Act				
	and the Construction Regulations.				
	F: ..... V: ..... T:	Item			
E13.1	**NOTIFICATION OF CONSTRUCTION WORK**				
	(Construction Regulations 3)				
	The contractor shall, before commencing work, notify the				
	Department of Labour of the intend construction work in				
	terms o Regulation 3. The Contractor shall submit the				
	notification in writing, on the appropriate form, prior to				
	commencement of work.				
	F: ..... V: ..... T:	Item			
E13.2	**HEALTH AND SAFETY PLAN (Construction**				
	regulations 5.4)				
	The Contractor shall provide and demonstrate to the				
	Principal Agent a suitable and sufficiently documented				
	health and safety plan based on the Act, Construction				
	Regulations and the health and safety specification,				
	which shall be applied from the date of commencement				
	of and for the duration of the construction work. The				
	Contractor shall ensure that a copy of the health and				
	safety plan is available on request to an employee,				
	inspector, sub contractor or principal agent all in terms				
	of Regulation 5.				
	F: ..... V: ..... T:	Item			
E13.3	**REGISTRATION WITH THE COMPENSATION FUND**				
	(Construction Regulations 5.3 f)				
	The Contractor shall provide proof of his registration and				
	good standing with the Compensation Fund or a licensed				
	compensation insurer prior to the commencement of				
	work				
	F: ..... V: ..... T:	Item			
E13.4	**HEALTH AND SAFETY FILE (Construction**				
	Regulation 5.7)				
	The contractor shall ensure that a health and safety file,				
	which shall include all documentation required in terms				
	of health and safety specification, the Act and the				
	Construction Regulations, is opened and kept on site				
	and made available to the Principal Agent or inspector				
	upon request. Upon completion of the works, the				
	contractor shall hand over a consolidated health and				
	safety file to the principal agent.				
	F: ..... V: ..... T:	Item			
				CARRIED FORWARD	

Department:
Public Works and Infrastructure
REPUBLIC OF SOUTH AFRICA

GEBERATOR INSTALLATION AT MSINGA, NQUTHU AND NEW HANOVER COURTS
ELECTRICAL ENGINEERING SERVICES

ITEM NO	DESCRIPTION	UNIT	QTY	RATE	AMOUNT
				BROUGHT FORWARD	
E13.5	**SUPERVISION OF CONSTRUCTION WORK (Safety officers) (Construction Regulation 6)**				
	The Contractor shall appoint a full-time competent employee in writing as the construction supervisor, with the duty of supervising the construction work.				
	The Contractor shall appoint a full-time or part-time construction safety officers in writing to assist in the control of all safety related aspects on the site. Such appointments are required to ensure that at all times the requirements of the Act and Construction Regulations are adhered to. Refer to Regulation 6.				
	F: ..... V: ..... T:	Item			
E13.6	**RISK ASSESSMENT AND SAFETY POLICY (Construction Regulation 7)**				
	Before commencing work the Contractor shall cause a risk assessment to be performed by a competent person appointed in writing and the risk assessment shall form part of the health and safety plan. A copy of the risk assessment shall be available on site at all times for inspection. The Contractor shall at all time carry out the works in a manner to avoid the risk of bodily harm to persons or risk of damage to any property. He shall take all precautions regarding training of employees in any hazards and the related work procedures, health and safety induction training of employees, visitors or any other persons entering the site and provide personal protective equipment to all employees and visitors to site which are necessary and adequate to eliminate any conditions which contribute to the risk of injury to persons or damage to property in terms of Regulation 7.				
	F: ..... V: ..... T:	Item			
E13.7	**SIGNIFICANT HAZARD IDENTIFICATION RISK ASSESSMENT PREPARED BY THE DESIGN CONSULTANTS**				
	The Contractor shall allow for additional financial provision, if any , to take the necessary precautions regarding the significant hazards and risks identified and assessed by the design consultants.				
	F: ..... V: ..... T:	Item			N/A
E13.8	**ADDITIONAL FINANICAL PROVISION**				
	The Contractor shall allow for additional financial provision, if any, to comply with the requirements of the Occupational Health and Safety Act (Act No 85 of 1993) and the Construction Regulations issued there under which have not been specifically elsewhere.				
	F: ..... V: ..... T:	Item			
				CARRIED FORWARD	

Department: Public Works and Infrastructure
REPUBLIC OF SOUTH AFRICA

GEBERATOR INSTALLATION AT MSINGA, NQUTHU AND NEW HANOVER COURTS
ELECTRICAL ENGINEERING SERVICES

ITEM NO	DESCRIPTION	UNIT	QTY	RATE	AMOUNT
				BROUGHT FORWARD	
E13.9	**FALL PROTECTION PLAN (Construction Regulation 8)**				
	The Contractor shall, before commencing any construction work submit a fall protection plan identified all steps to be taken in order to ensure the continued adherence to the fall protection plan and shall include a risk assessment of all work carried out from a relevant position. The fall protection plan shall form part of the health and safety plan and file.				
	F: ..... V: ..... T:	Item			
E13.10	**PHYSICAL AND PSYCHOLOGICAL FITNESS (Construction Regulation 8.2 (b))**				
	The Contractor and sub-contractor shall before commencing any construction work submit proof of his employees that shall carried out work from an elevated position their physical and psychological fitness and shall be recorded in the health and safety file.				
	F: ..... V: ..... T:	Item			
E13.11	**CONSTRUCTION VEHICLES AND MOBILE PLANT (Construction Regulations 21)**				
	The Contractor and sub-contractors shall ensure that all operated workers received training and been certified competent to operate such vehicles, and are physical and psychological fit to operate such construction vehicles and mobile plants and shall be recorded in the health and safety file.				
	F: ..... V: ..... T:	Item			
E13.12	**TRAINING (Construction Regulation 8 (c))**				
	The Contractor and sub-contractor shall, before commencing any construction work, submit his training program of all his employees. This program shall form part of the health and safety plan.				
	F: ..... V: ..... T:	Item			
E13.13	**DEMOLITION WORK (Construction Regulations 12)**				
	The Contractor shall, before any demolition work shall be carried out, submit all methods of demolition to be used. This method shall form part of the health and safety plan and file.				
	F: ..... V: ..... T:	Item			
				CARRIED FORWARD	

Department: Public Works and Infrastructure
REPUBLIC OF SOUTH AFRICA

GEBERATOR INSTALLATION AT MSINGA, NQUTHU AND NEW HANOVER COURTS
ELECTRICAL ENGINEERING SERVICES

ITEM NO	DESCRIPTION	UNIT	QTY	RATE	AMOUNT
				BROUGHT FORWARD	
E13.14	**REMOVAL AND DISPOSAL OF ASBESTOS**				
	MATERIAL (Asbestos Regulation)				
	The principle contractor shall appoint a contractor that				
	is registered with the Department of Labour as an AIA.				
	The contractor must allow for:				
	NOTIFICATION OF ASBESTOS PROCESSING				
	PERSONAL PROTECTIVE EQUIPMENT				
	PACKAGING AND TRANSPORT AND STORAGE TO				
	DISPOSAL SITE				
	DEMOLITION WORK				
	LABELLING, INFORMATION, ETC.				
	F: ..... V: ..... T:	Item			N/A
E13.15	**RISK COMPLIANCE AREAS (As Outlined**				
	In "Volume Three": Covid-19 Guidelines for				
	Management of Risk on Construction Sites and				
	Covid-19 addendum (Item 1-12) attached to				
	Health and Safety specification)				
	· Disinfection of the workplace at regular intervals as				
	outlined within the Guidelines "Annexure A"				
	Workplace Preparation Procedure;				
	· Ensure Staff and Security Staff have PPEs (i.e.				
	masks, gloves, sanitizers, etc.)				
	· Installed thermal scanners to check temperature of				
	all staff and visitors. Ensure training of Security Staff				
	for use of thermal scanners. Register to be				
	implemented for staff and visitors to site with				
	identification criteria "ID number, Name, Age,				
	Health Status and Contact details";				
	· Isolation room identified/constructed on site;				
	· Ensure sanitizers and soap are available in locker				
	rooms for staff;				
	· Ensure staff or visitors are wearing masks before				
	entering;				
	· Ensure social distance on site;				
	· Notification about the restriction of the number of				
	people allowed on site at one time;				
	· Disinfection of rooms for meetings and strictly				
	keeping to social distancing and wearing masks;				
	· Plans to rotate work force on percentage allowable				
	on site to comply with regulations;				
	· Permits issued by Authorising Authority for Work				
	Force and vehicles for Cross Provincial and District				
	Boarders				
	F: ..... V: ..... T:	Item			
				CARRIED FORWARD	

Department: Public Works and Infrastructure
REPUBLIC OF SOUTH AFRICA

GEBERATOR INSTALLATION AT MSINGA, NQUTHU AND NEW HANOVER COURTS
ELECTRICAL ENGINEERING SERVICES

ITEM NO	DESCRIPTION	UNIT	QTY	RATE	AMOUNT
				BROUGHT FORWARD	
E14	**IMPLEMENTATION OF LABOUR-INTENSIVE**				
	INFRASTRUCTURE PROJECTS UNDER THE				
	EXPANDED PUBLIC WORKS PROGRAMME (EPWP)				
	The contractor shall comply with all the requirements of				
	the "Code of Good Practice for Employment and				
	Conditions of Work for Special Public Works				
	Programmes" issued in terms of the "Basic Conditions				
	of Employment Act, 1997 (Act No 75 of 1997)" and the				
	related "Ministerial Determination", for the employment				
	of locally employed temporary workers on a labour				
	intensive infrastructure project under the Expanded				
	Public Works Programme (EPWP)				
	The contractor shall maintain daily records with regard				
	to the workers employed and shall, on a monthly basis,				
	submit a report (Contract, ID Copy, Attendance register,				
	Proof of payment) to the principal agent in the				
	prescribed format. Compulsory indicators such as the				
	project budget, actual project expenditure, number of job				
	opportunities created, demographic characteristics of				
	workers employed, minimum daily wage rate, number of				
	person-days of employment created and number of				
	training person-days, shall be included in said report, all				
	as defined in the "Guidelines for the Implementation of				
	Labour-Intensive Infrastructure Projects under the				
	Expanded Public Works Programme (EPWP)"				
	Provision for pricing of compliance with the				
	aforementioned is made under this clause and it is				
	explicitly pointed out that all that all requirements in				
	respect of the aforementioned are deemed to be priced				
	hereunder and no additional claims in this regard shall				
	be entertained				
	F: ..... V: ..... T:	Item			
E14.1	**DECLARATION - EPWP PROGRAMME**				
	The contractor must adhere to all rules, regulations and				
	requirements regarding the EPWP programme,				
	specifically but not limited to the following:				
	1. Labour intensive construction methods (LIC)				
	1.1 Comply to implementation of LIC BOQ items				
	specified elsewhere in the tender documents				
	2. Recruitment and placement of EPWP NYS (Not				
	Applicable)				
	2.1 Recruitment, placement and exposure training of				
	25 (Twenty five) participants				
	2.2 Comply to EPWP BOQ specifications and code of				
	good practice				
	3. Recruitment and placement of local labourers				
	3.1 Recruitment and placement of minimum 5 (Five)				
	local labourers				
	3.2 Comply with applicable wage order/determination				
	or agreement, in terms of labour relations act or				
	wage act				
				CARRIED FORWARD	

Department: Public Works and Infrastructure REPUBLIC OF SOUTH AFRICA

GEBERATOR INSTALLATION AT MSINGA, NQUTHU AND NEW HANOVER COURTS
ELECTRICAL ENGINEERING SERVICES

ITEM NO	DESCRIPTION	UNIT	QTY	RATE	AMOUNT
				BROUGHT FORWARD	
	4. Comply with EPWP monthly reporting				
	requirements				
	Monthly prepare and submit below EPWP reports				
	attached to monthly payments certificate				
	4.1 All employees and EPWP participants contracts				
	4.2 All employees and EPWP participants certified SA				
	ID copies				
	4.3 All employees and EPWP attendance register				
	4.4 All employees and EPWP proof of payment				
	4.5 EPWP reports populated on standard templates				
	5. Penalties for non compliance				
	Acknowledge non compliance of R3000-00 (Three				
	thousand rand) per month per participant				
	F: ..... V: ..... T:	Item			
E15	**HIV/AIDS AWARENESS**				
	It is required of the contractor to thoroughly study the				
	HIV/AIDS Specification (PW 1544) of the Department				
	that must be read together with and is deemed to be				
	incorporated under this Section of the Bills of Quantities.				
	Provision for pricing of HIV/AIDS awareness is made				
	under items E14.1 to E14.5 hereafter and it is explicitly				
	pointed out that all requirements of the aforementioned				
	specification are deemed to be priced hereunder, as the				
	said items represent the only method of measurement				
	and no additional items or extras to the contract in this				
	regard shall be entertained				
	The contractor must take note that compliance with the				
	HIV/AIDS Specification is compulsory. In the event of				
	partial or total non-compliance, the principal agent,				
	notwithstanding the provisions of Clause A 31.0 of				
	Section A or any other clause to the contrary, reserves				
	the right to delay issuing any progress payment				
	certificate until the contractor provides satisfactory				
	proof of compliance. The contractor shall not be				
	entitled to any compensation of whatsoever nature,				
	including interest, due to such delay of payment				
E15.1	**AWARENESS CHAMPION**				
	Selection, appointment, briefing and making available of				
	an Awareness Champion including provision of all				
	relevant services, all in accordance with the HIV/AIDS				
	Specification				
	F: ..... V: ..... T:	Item			
E15.2	**AWARENESS WORKSHOPS**				
	Selection and appointment of a competent Service				
	Provider approved by the principal agent, provision of				
	a Service Provider Workshop Plan and a suitable				
	venue, conducting of awareness workshops by means				
	of traditional and/or modern multimedia techniques,				
	including follow-up courses, making available all tuition				
	material and performing assessment procedures, all in				
	accordance with the HIV/AIDS Specification				
	F: ..... V: ..... T:	Item			
				CARRIED FORWARD	

Department: Public Works and Infrastructure
REPUBLIC OF SOUTH AFRICA

GEBERATOR INSTALLATION AT MSINGA, NQUTHU AND NEW HANOVER COURTS
ELECTRICAL ENGINEERING SERVICES

ITEM NO	DESCRIPTION	UNIT	QTY	RATE	AMOUNT
				BROUGHT FORWARD	
E15.3	**POSTERS, BOOKLETS, VIDEOS, ETC.**				
	Provision, displaying, maintaining and replacing when necessary of four plastic laminated posters, booklets and educational videos, etc. for the duration of the construction period, all in accordance with the HIV/AIDS Specification				
	F: ..... V: ..... T:	Item			
E15.4	**ACCESS TO CONDOMS**				
	Provision and maintenance of condom dispensers fixed in position, including male and female condoms, replenishing male and female condoms on a daily basis as required for the duration of the construction period, all in accordance with the HIV/AIDS Specification				
	F: ..... V: ..... T:	Item			
E15.5	**MONITORING**				
	Monitoring HIV/AIDS awareness of workers, providing the principal agent with access to information including making available all reports, thoroughly completed and reflecting the correct information, for the duration of the construction period and close out, all in accordance with the HIV/AIDS Specification				
	F: ..... V: ..... T:	Item			
E16	**CONSTRUCTION VEHICLES FOR DELIVERY OF EQUIPMENT**				
	Allow for vehicles such as truck cranes, forklifts, etc. for the moving of the generator into place and delivery of other necessary equipment for the project.				
	F: ..... V: ..... T:	Item			
E17	**ALTERNATE POWER SUPPLIES FOR CONSTRUCTION**				
	Allow for the supply of portable generators and/or other alternate power supplies for construction equipment in the event of power failure on the premises.				
	F: ..... V: ..... T:	Item			
				CARRIED FORWARD TO SECTION 11 SUMMARY	

Department:
Public Works and Infrastructure
REPUBLIC OF SOUTH AFRICA

GENERATOR INSTALLATION AT MSINGA MAGISTRATE COURT
ELECTRICAL ENGINEERING SERVICES

TENDER NUMBER:

ITEM NO	DESCRIPTION	UNIT	QTY	RATE	AMOUNT
2,1	**EMERGENCY STANDBY GENERATOR ENGINE** Supply, Deliver, install and commissioning of standby generator complete in canopy as specified for the following sizes: The Engine shall be a Diesel Fuelled, old starting liquid cooled, compression ignition, direct injection industrial type as complying with SANS 8528. The cooling system shall be thermostatically controlled entirely self-contained and shall consist of a radiator, fan and Circulation pump as per DPWI specification. The following from part of genset: Water jacket heater, fuel level indicator, fire fuse link shut off system,drip tray, battery charger, battery charger amp meter, canopy lights, fuel filling pump, Anti vibration mounts.				
2,1,1	100kVA diesel generator (outdoor type) with a 600 litres base tank (400V); 100kVA prime rating and 110kVA standby rating. The base tank must be self bunded Supply & Install	No	1		
2,2	**3CR12 CHANGE OVER PANEL WITH CONTROLLER** The control shall contain the engine, alternator management and protection system, as well as the control logistics for the remote changeover switchgear. These functios shall be controlled by a				
2,2,1	micro-processor-based programmable control and it shall be equipped qith an optional GSM cellphone-type modem as per DPWI specifications (modem with sim card), c/w adjustable CB, motorized c/p & by pass switch Supply & Install	No	1		
2,2,2	**LUBRICATION, OIL AND DIESEL** Supply and fill up to 100% all required lubrications to run generator inclusing diesel. Base Tank shall be a 600L capacity	item	600		
2,3	**EXHAUST SILENCER - Sound Attenuated**				
2,3,1	Design supply and install the stainless steel exhaust silencer for the mentioned generator, including lagging: Supply & Install	No	1		
2,4	**STRUCTURAL - TYPICAL GENERATOR BASE** Contractor to appoint specialist to design a complete concrete plinth for the installation of the above mentioned 100kVA outdoor				
2,4,1	generator set. Prepare ground surface and cast concrete plinth complete with ducting, drain pipe and earthing pits, capable for holding a 100kVA diesel generator, including all formwork, labour and materials in accordance with the specification & a structural engineers certificate	item	1		
2,5	**WARNING NOTICES**				
2,5,1	Supply and Install warning notices on the container as specified. Set of Warning Notices as per SANS and OHS specifications.	Item	1		
2,6	**DOCUMENTATION**				
2,6,1	Compilation of Maintenance, operational and technical Manuals to the client satisfaction. Supply manuals	sum	1		
2,7	**SITE TESTING, COMMISSIONING & DOCUMENTATION**				
2,7,1	Test and Commission to deliver a fully operational generating set to the client and engineers satisfaction: At the suppliers premises, prior to delivery to site On site after completion of the installation	Item	1		
				CARRIED FORWARD	R

public works & infrastructure
Department:
Public Works and Infrastructure
REPUBLIC OF SOUTH AFRICA

GENERATOR INSTALLATION AT MSINGA MAGISTRATE COURT
ELECTRICAL ENGINEERING SERVICES

TENDER NUMBER:

ITEM NO	DESCRIPTION	UNIT	QTY	RATE	AMOUNT
				BROUGHT FORWARD	R
2,8	**1 YEAR MAINTENANCE**				
2,8,1	12 Month maintenance as per the specification. Quarterly (4) service of the plant as per the manufacturer's requirements	Item	4		
2,9	**PADLOCKS**				
2.9.1	Supply and install A82 padlocks.	Item	5		
2,10	**CONSTRUCTION DRAWINGS**				
2,10,1	Contractor to provide printed A1/A0 of all drawings received from the Engineer for construction	No	4		
2,11	**MUNICIPALITY/ESKOM SWITCHING FEES**				
2.11.1	Contractor to allow for the disconnection and connection fees	Item	1		
2,12	**TRAINING**				
2.12.1	Training of officials in the use of the generator	Item	1		
2,13	**CERTIFICATE OF COMPLIANCE**				
2,13,1	Contractor to provide complete CoC for the entire installation in accordance to SANS and OHS Regulations	Item	1		
2,14	**FILTERATION SYSTEM**				
2,14,1	Supply and install fuel filteration system with automatic, mechanical water drain with a 15A 220V supply. System to operat 24/7/365 days and filter down to 5mirons	Item	1		
2,15	**GENERAL**				
2,15,1	Contractor to trace underground cables, circuits and other services before any digging and installations at this facility	Item	1		
2,15,2	Isolate and remove cabling, circuits,existing DB etc. during installations.	Item	1		
				CARRIED FORWARD TO SECTION 11 SUMMARY	R

public works & infrastructure
Department: Public Works and Infrastructure
REPUBLIC OF SOUTH AFRICA

GENERATOR INSTALLATION AT MSINGA MAGISTRATE COURT
ELECTRICAL ENGINEERING SERVICES

TENDER NUMBER:

ITEM NO	DESCRIPTION	UNIT	QTY	RATE	AMOUNT
3,1	**LOW VOLTAGE SUPPLY CABLES** Supply and install the following 600/1000V PVC/SWA/PVC cables with copper conductor to SABS 1507 laid v ertically or horizontally in conduiting or ducting or clipped direct in accordance with the specifications and drawings, including fixing. (Termination elsewhere).				
3,1,1	70mm² 4C PVC SWA ECC	m	110		
3,1,2	6mm² 7 core cable with earth	m	70		
3,2	**CABLE TERMINATIONS** Termination of LV cables as specified including connection of conductors, cable lugs, captive glands, shrounds, etc. for the following cable sizes. (Supply and Install)				
3,2,1	70mm² 4C PVC SWA ECC	No	4		
3,2,2	50mm² Insulated Earth Conductor ECC	No	4		
3,2,3	6mm² 7 core cable with earth	No	2		
3,3	**INSULATED EARTH COPPER CONDUCTOR ECC** Supply and install 600/1000V conductors and bare stranded copper conductors on wire ways or trenching including terminations for earthing in accordance with the specifications and drawings				
3,3,1	50mm² Insulated Earth conductor ECC	m	110		
3,4	**CABLE SLEEVES AND PIPES**				
3,4,1	110mm Diameter	m	110		
3,4,2	110mm Diameter Slow bends	No	4		
3,5	**EARTHING AND ASSECCORIES** Supply and install 1.2 m long copper coated earth spike incl earth clamp and earth coupling on Distribution Board				
3,5,1	1.2m earth spike supply Install	 No No	 4 4		
3,5,2	Lightning and Earthing Installation for this installation with a Certificate (Allowable Resistance less than 10 ohms) at generator & Main DB	No	1		
3,6	**JOINTING KIT** Supply and install jointing of LV cables as specified above with all the accessories :				
3,6,1	Prysmian Resin Filled Cable Joints 70mm²	No	1		
3,6,2	Prysmian Resin Filled Cable Joints 50mm²	No	1		
				CARRIED FORWARD	R

public works & infrastructure
Department:
Public Works and Infrastructure
REPUBLIC OF SOUTH AFRICA

GENERATOR INSTALLATION AT MSINGA MAGISTRATE COURT
ELECTRICAL ENGINEERING SERVICES

TENDER NUMBER:

ITEM NO	DESCRIPTION	UNIT	QTY	RATE	AMOUNT
				BROUGHT FORWARD	R
3,7	**DISTRIBUTION BOARDS** Work includes installing new labels, danger signs, updating legends, general cleaning, repairs to wiring, tightening of loose connections and DB enclosure, and issuing of CoC for distribution boards. The contractor must allow for the tracing of circuits on the main DB. Installation of an essential main cable on DB.				
3,7,1	Main Distribution Board Court House	item	1		
3,7,2	Supply and install 4 pole 40kA surge arrester, type 1&2	No	1		
3,8	**CIRCUIT BREAKERS**				
3,8,1	150Ampere TP 25kA 400V AC	No	1		
	ISOLATOR				
3,8,4	100 Ampere TP 10kA 400V AC	No	1		
3,9	**SPRAY PAINT EXISTING DISTRIBUTION BOARD/PANEL**				
3,9,1	Work includes spray painting the DB faces plates and doors from white/grey to red for all distribution boards	No	5		
3,10	**WARNING TAPE**				
3,10,1	Cable warning tape placed 150mm above cable in excavations.	m	110		
3,11	**SMALL POWER, CONDUIT, ETC.**				
	PVC conduit placed in position for casting in concrete or screed, for building or chasing in concrete or brickwork, and surface mounting in ceiling voids including bending, short lengths, draw boxes, couplings, bends, tees and saddles				
3,11,1	20mm Diameter Conduit	m	50		
3,11,2	25 x 16 mm PVC Trunking	m	40		
3,11,3	Round PVC conduit box with covers 20mm Three Way	No	5		
3,12	**CONDUCTORS** PVC insulated stranded copper conductors drawn into wireways and trunking including terminations and connections				
3,12,1	2.5mm²	m	200		
3,13	**LIGHTING** Supply and Install luminaires or equipment complete with lamps, connections, etc. mounted in position				
3,13,1	Round LED fitting 20W with an Aluminium base	No	2		
3,13,2	20 A Photoelectric daylight sensitive switch complete with base	No	1		
				CARRIED FORWARD TO SECTION 11 SUMMARY	R

public works & infrastructure
Department:
Public Works and Infrastructure
REPUBLIC OF SOUTH AFRICA

GENERATOR INSTALLATION AT MSINGA MAGISTRATE COURT
ELECTRICAL ENGINEERING SERVICES

TENDER NUMBER:

ITEM NO	DESCRIPTION	UNIT	QTY	RATE	AMOUNT
4,0	**CIVIL WORKS** Civil works include site clearance, excavation for eletrical cables trenching, geotechnical and/or structural elements investigations.				
4,1	**CABLE TRENCH AND ACCESSORIES**				
4,1,1	Excavation and backfilling in soft soil	m^3	60		
4,1,2	Excavation and backfilling in hard rock	m^3	30		
4,1,3	Back Fill River Sand 300mm wide & 600mm deep	m^3	60		
4,1,4	Back Fill Trenches and compaction	m^3	60		
4,1,5	Danger Tape	m	110		
4,2	**ELECTRICAL MANHOLE** Supply and build either pre-cast or full wall manhole withlight duty cover with the following minimum inside dimensions: - 650 x 650 x 600mm deep				
4,2,1	Electrical Manhole	No	2		
4,3	110mm Diam. Sleeve to be installed in plinth for electrical cable and connection	m	10		
4,4	Concrete surface around the plinth 150mm with re-inforcements and mesh. Re-surface with crusher stone(100mm) and compact before applying concrete	m^2	25		
4,5	Supply and install fully hot dipped galvanized diamond mesh fencing 3.15mm thick and a height of 2.7m with 4mm straining wire at a 400mm spacing around the generator installation. Install concrete beam at the bottom and use as fixtures for the wire.	m^2	30		
4,6	Fully Hot Dipped Galvanized Poles Dia 100	No	8		
4,7	Fully hot dipped galvanized gate with locking mechanism and a pad lock(50mm tubed gate)	Unit	1		
4,8	Razor Wore coiled Dia. 600 above the fencing with fixtures	m^2	30		
4,9	Supply and install paving slabs 600 x 600 x 50mm from the tarred surface to the generator. The base must be levelled, re-filled, compacted and soil poisoned before installing. All joints must be cemented and create drainages for the water.	m^2	25		
4,10	Concrete of Surfaces to match existing	m^2	25		
4,11	Pick up paving bricks, trench & repave. Allow for new bricks	m^2	30		
4,12	Undercoat & Painting of the internal wall surfaces to match the existing	m^2	20		
4,13	Connect water system with a tap next to the generator. Supply to be taken from the nearest water point at the facility. Allow for copper pipe, fittings, holder battons, and a garden hose	Item	1		
				CARRIED FORWARD TO SECTION 11 SUMMARY	**R**

public works & infrastructure
Department: Public Works and Infrastructure
REPUBLIC OF SOUTH AFRICA

GENERATOR INSTALLATION AT NQUTHU MAGISTRATE COURT
ELECTRICAL ENGINEERING SERVICES

TENDER NUMBER:

ITEM NO	DESCRIPTION	UNIT	QTY	RATE	AMOUNT
5,1	**EMERGENCY STANDBY GENERATOR ENGINE** Supply, Deliver, install and commissioning of standby generator complete in canopy as specified for the following sizes: The Engine shall be a Diesel Fuelled, old starting liquid cooled, compression ignition, direct injection industrial type as complying with SANS 8528. The cooling system shall be thermostatically controlled entirely self-contained and shall consist of a radiator, fan and Circulation pump as per DPWI specification. The following from part of genset: Water jacket heater, fuel level indicator, fire fuse link shut off system,drip tray, battery charger, battery charger amp meter, canopy lights, fuel filling pump, Anti vibration mounts.				
5,1,1	200kVA diesel generator (outdoor type) with a 1000 litres base tank (400V). Base tank must be self bunded. Supply & Install	No	1		
5,2	**3CR12 CHANGE OVER PANEL WITH CONTROLLER**				
5,2,1	The control shall contain the engine, alternator management and protection system, as well as the control logistics for the remote changeover switchgear. These functios shall be controlled by a micro-processor-based programmable control and it shall be equipped qith an optional GSM cellphone-type modem as per DPWI specifications (modem with sim card), c/w adjustable CB, motorized c/p & by pass switch Supply & Install	No	1		
5,2,2	**LUBRICATION, OIL AND DIESEL** Supply and fill up to 100% all required lubrications to run generator inclusing diesel. Base Tank shall be a 1000L capacity	item	1000		
5,3	**EXHAUST SILENCER - Sound Attenuated**				
5,3,1	Design supply and install the stainless steel exhaust silencer for the mentioned generator, including lagging: Supply & Install	No	1		
5,4	**STRUCTURAL - TYPICAL GENERATOR BASE**				
5,4,1	Contractor to appoint specialist to design a complete concrete plinth for the installation of the above mentioned 200kVA outdoor generator set. Prepare ground surface and cast concrete plinth complete with ducting, drain pipe and earthing pits, capable for holding a 200kVA diesel generator, including all formwork, labour and materials in accordance with the specification & a structural engineers certificate	item	1		
5,5	**WARNING NOTICES**				
5,5,1	Supply and Install warning notices on the container as specified. Set of Warning Notices as per SANS and OHS specifications.	Item	1		
5,6	**DOCUMENTATION**				
5,6,1	Compilation of Maintenance, operational and technical Manuals to the client satisfaction. Supply manuals	sum	1		
5.7	**SITE TESTING, COMMISSIONING & DOCUMENTATION**				
5,7,1	Test and Commission to deliver a fully operational generating set to the client and engineers satisfaction: At the suppliers premises, prior to delivery to site On site after completion of the installation	Item	1		
				CARRIED FORWARD	R

Department:
Public Works and Infrastructure
REPUBLIC OF SOUTH AFRICA

GENERATOR INSTALLATION AT NQUTHU MAGISTRATE COURT
ELECTRICAL ENGINEERING SERVICES

TENDER NUMBER:

ITEM NO	DESCRIPTION	UNIT	QTY	RATE	AMOUNT
				BROUGHT FORWARD	R
5,8	**1 YEAR MAINTENANCE**				
5,8,1	12 Month maintenance as per the specification. Quarterly (4) service of the plant as per the manufacturer's requirements	Item	4		
5,9	**PADLOCKS**				
5,9,1	Supply and install A82 padlocks.	Item	5		
5,10	**CONSTRUCTION DRAWINGS**				
5,10,1	Contractor to provide printed A1/A0 of all drawings received from the Engineer for construction	No	4		
5,11	**MUNICIPALITY/ESKOM SWITCHING FEES**				
5,11,1	Contractor to allow for the disconnection and connection fees	Item	1		
5,12	**TRAINING**				
5,12,1	Training of officials in the use of the generator	Item	1		
5,13	**CERTIFICATE OF COMPLIANCE**				
5,13,1	Contractor to provide complete CoC for the entire installation in accordance to SANS and OHS Regulations	item	1		
5,14	**FILTERATION SYSTEM**				
5,14,1	Supply and install fuel filteration system with automatic, mechanical water drain with a 15A 220V supply. System to operat 24/7/365 days and filter down to 5mirons	Item	1		
5,15	**GENERAL**				
5,15,1	Contractor to trace underground cables, circuits and other services before any digging and installations at this facility	Item	1		
5,15,2	Isolate and remove cabling, circuits,existing DB etc. during installations.	Item	1		
				CARRIED FORWARD TO SECTION 11 SUMMARY	R

Department: Public Works and Infrastructure
REPUBLIC OF SOUTH AFRICA

GENERATOR INSTALLATION AT NQUTHU MAGISTRATE COURT
ELECTRICAL ENGINEERING SERVICES

TENDER NUMBER:

ITEM NO	DESCRIPTION	UNIT	QTY	RATE	AMOUNT
6,1	**LOW VOLTAGE SUPPLY CABLES** Supply and install the following 600/1000V PVC/SWA/PVC cables with copper conductor to SABS 1507 laid v ertically or horizontally in conduiting or ducting or clipped direct in accordance with the specifications and drawings, including fixing. (Termination elsewhere).				
6.1.1	150mm² 4C PVC SWA ECC	m	190		
6,1,2	6mm² 7 core cable with earth	m	80		
6,2	**CABLE TERMINATIONS** Termination of LV cables as specified including connection of conductors, cable lugs, captive glands, shrounds, etc. for the following cable sizes. (Supply and Install)				
6,2,1	150mm² 4C PVC SWA ECC	No	4		
6,2,2	120mm² Insulated Earth Conductor ECC	No	4		
6,2,3	6mm² 7 core cable with earth	No	2		
6,3	**INSULATED EARTH COPPER CONDUCTOR ECC** Supply and install 600/1000V conductors and bare stranded copper conductors on wire ways or trenching including terminations for earthing in accordance with the specifications and drawings				
6,3,1	120mm² Insulated Earth conductor ECC	m	190		
6,4	**CABLE SLEEVES AND PIPES**				
6,4,1	110mm Diameter	m	170		
6,4,2	110mm Diameter Slow bends	No	8		
6,5	**EARTHING AND ASSECCORIES** Supply and install 1.2 m long copper coated earth spike incl earth clamp and earth coupling on Distribution Board				
6.5.1	1.2m earth spike supply Install	 No No	 4 4		
6,5,2	Lightning and Earthing Installation for this installation with a Certificate (Allowable Resistance less than 10 ohms) at generator & LV board	No	1		
6,6	**JOINTING KIT** Supply and install jointing of LV cables as specified above with all the accessories :				
6,6,1	Prysmian Resin Filled Cable Joints 150mm²	No	1		
6,6,2	Prysmian Resin Filled Cable Joint 120mm²	No	1		
				CARRIED FORWARD	

Department: Public Works and Infrastructure
REPUBLIC OF SOUTH AFRICA

GENERATOR INSTALLATION AT NQUTHU MAGISTRATE COURT
ELECTRICAL ENGINEERING SERVICES

TENDER NUMBER:

ITEM NO	DESCRIPTION	UNIT	QTY	RATE	AMOUNT
				BROUGHT FORWARD	R -
6,7	**DISTRIBUTION BOARDS**				
	Work includes installing new labels, danger signs, updating legends, general cleaning, repairs to wiring, tightening of loose connections and DB enclosure, and issuing of CoC for distribution boards. The contractor must allow for the tracing of circuits on the main DB /LV board. Installation of essential main cable on DB. Make the DB board lockable with a padlock. Installation of essential main cable on DB.				
6.7,1	LV board behind the home affairs office	item	1		
6,7,2	Supply and install 4 pole 40kA surge arrester, type 1&2	No	1		
6,8	**CIRCUIT BREAKERS**				
6,8,1	250Ampere TP 25kA 400V AC	No	2		
	ISOLATORS				
6,8,2	250 Ampere TP 25kA 400V AC	No	2		
6,9	**SPRAY PAINT EXISTING DISTRIBUTION BOARD/PANEL**				
6,9,1	Work includes spray painting the DB faces plates and doors from white/grey to red for all distribution boards	No	8		
6,10	**WARNING TAPE**				
6,10,1	Cable warning tape placed 150mm above cable in excavations.	m	150		
6,11	**SMALL POWER, CONDUIT, ETC.**				
	PVC conduit placed in position for casting in concrete or screed, for building or chasing in concrete or brickwork, and surface mounting in ceiling voids including bending, short lengths, draw boxes, couplings, bends, tees and saddles				
6,11,1	20mm Diameter Conduit	m	50		
	25 x 16 mm PVC Trunking	m	40		
6,11,2	Round PVC conduit box with covers 20mm Three Way	No	5		
6,12	**CONDUCTORS**				
	PVC insulated stranded copper conductors drawn into wireways and trunking including terminations and connections				
6,12,1	2.5mm²	m	200		
6,13	**LIGHTING**				
	Supply and Install luminaires or equipment complete with lamps, connections, etc. mounted in position				
6,13,1	Round LED fitting 20W with an Aluminium base	No	2		
6,13,2	20 A Photoelectric daylight sensitive switch complete with base	No	1		
				CARRIED FORWARD TO SECTION 11 SUMMARY	R

public works & infrastructure
Department:
Public Works and Infrastructure
REPUBLIC OF SOUTH AFRICA

GENERATOR INSTALLATION AT NQUTHU MAGISTRATE COURT
ELECTRICAL ENGINEERING SERVICES

TENDER NUMBER:

ITEM NO	DESCRIPTION	UNIT	QTY	RATE	AMOUNT
7,0	**CIVIL WORKS** Civil works include site clearance, excavation for eletrical cables trenching, geotechnical and/or structural elements investigations.				
7,1	**CABLE TRENCH AND ACCESSORIES**				
7,1,1	Excavation and backfilling in soft soil	m^3	60		
7,1,2	Excavation and backfilling in hard rock	m^3	30		
7,1,3	Back Fill River Sand 300mm wide & 600mm deep	m^3	60		
7,1,4	Back Fill Trenches and compaction	m^3	60		
7,1,5	Danger Tape	m	170		
7,2	**ELECTRICAL MANHOLE** Supply and build either pre-cast or full wall manhole withlight duty cover with the following minimum inside dimensions: - 650 x 650 x 600mm deep				
7,2,1	Electrical Manhole	No	2		
7,3	110mm Diam. Sleeve to be installed in plinth for electrical cable and connection	m	10		
7,4	Concrete surface around the plinth 150mm with re-inforcements and mesh. Re-surface with crusher stone(100mm) and compact before applying concrete	m^2	25		
7,5	Supply and install fully hot dipped galvanized diamond mesh fencing 3.15mm thick and a height of 2.7m with 4mm straining wire at a 400mm spacing around the generator installation. Install concrete beam at the bottom and use as fixtures for the wire.	m^2	30		
7,6	Fully Hot Dipped Galvanized Poles Dia 100	No	8		
7,7	Fully hot dipped galvanized gate with locking mechanism and a pad lock(50mm tubed gate)	Unit	1		
7,8	Razor Wore coiled Dia. 600 above the fencing with fixtures	m^2	30		
7,9	Supply and install paving slabs 600 x 600 x 50mm from the tarred surface to the generator. The base must be levelled, re-filled, compacted and soil poisoned before installing. All joints must be cemented and create drainages for the water.	m^2	25		
7,10	Concrete of Surfaces to match existing	m^2	25		
7,11	Retarring of roardway and surfaces to match existing	m^2	20		
7,12	Undercoat & Painting of the internal wall surfaces to match the existing	m^2	20		
7,13	Connect water system with a tap next to the generator. Supply to be taken from the nearest water point at the facility. Allow for copper pipe, fittings, holder battons, and a garden hose	Item	1		
7,14	Provisional sum for the repairs to underground services	sum	1		
				CARRIED FORWARD TO SECTION 11 SUMMARY	**R**

Department:
Public Works and Infrastructure
REPUBLIC OF SOUTH AFRICA

GENERATOR INSTALLATION AT NEW HANOVER MAGISTRATE COURT
ELECTRICAL ENGINEERING SERVICES

TENDER NUMBER:

ITEM NO	DESCRIPTION	UNIT	QTY	RATE	AMOUNT
8,1	**EMERGENCY STANDBY GENERATOR ENGINE** Supply, Deliver, install and commissioning of standby generator complete in canopy as specified for the following sizes: The Engine shall be a Diesel Fuelled, old starting liquid cooled, compression ignition, direct injection industrial type as complying with SANS 8528. The cooling system shall be thermostatically controlled entirely self-contained and shall consist of a radiator, fan and Circulation pump as per DPWI specification. The following from part of genset: Water jacket heater, fuel level indicator, fire fuse link shut off system,drip tray, battery charger, battery charger amp meter, canopy lights, fuel filling pump, Anti vibration mounts.				
8.1.1	100kVA diesel generator (outdoor type) with a 600 litres base tank (400V); 100kVA prime rating and 110kVA standby rating. The base tank must be self bunded Supply & Install	No	1		
8,2	**3CR12 CHANGE OVER PANEL WITH CONTROLLER** The control shall contain the engine, alternator management and protection system, as well as the control logistics for the remote changeover switchgear. These functios shall be controlled by a micro-				
8,2,1	processor-based programmable control and it shall be equipped qith an optional GSM cellphone-type modem as per DPWI specifications (modem with sim card), c/w adjustable CB, motorized c/p & by pass switch Supply & Install	No	1		
8,2,2	**LUBRICATION, OIL AND DIESEL** Supply and fill up to 100% all required lubrications to run generator inclusing diesel. Base Tank shall be a 600L capacity	item	600		
8,3	**EXHAUST SILENCER - Sound Attenuated**				
2.3.1	Design supply and install the stainless steel exhaust silencer for the mentioned generator, including lagging: Supply & Install	No	1		
8,4	**STRUCTURAL - TYPICAL GENERATOR BASE**				
8.4.1	Contractor to appoint specialist to design a complete concrete plinth for the installation of the above mentioned 100kVA outdoor generator set. Prepare ground surface and cast concrete plinth complete with ducting, drain pipe and earthing pits, capable for holding a 100kVA diesel generator, including all formwork, labour and materials in accordance with the specification & a structural engineers certificate	item	1		
8,5	**WARNING NOTICES**				
8,5,1	Supply and Install warning notices on the container as specified. Set of Warning Notices as per SANS and OHS specifications.	Item	1		
8,6	**DOCUMENTATION**				
8,6,1	Compilation of Maintenance, operational and technical Manuals to the client satisfaction. Supply manuals	sum	1		
8,7	**SITE TESTING, COMMISSIONING & DOCUMENTATION**				
8.7.1	Test and Commission to deliver a fully operational generating set to the client and engineers satisfaction: At the suppliers premises, prior to delivery to site On site after completion of the installation	Item	1		
				CARRIED FORWARD	R

Department: Public Works and Infrastructure
REPUBLIC OF SOUTH AFRICA

GENERATOR INSTALLATION AT NEW HANOVER MAGISTRATE COURT
ELECTRICAL ENGINEERING SERVICES

TENDER NUMBER:

ITEM NO	DESCRIPTION	UNIT	QTY	RATE	AMOUNT
				BROUGHT FORWARD	R
8,8	**1 YEAR MAINTENANCE**				
8.8.1	12 Month maintenance as per the specification. Quarterly (4) service of the plant as per the manufacturer's requirements	Item	4		
8,9	**PADLOCKS**				
8,9,1	Supply and install A82 padlocks.	Item	5		
8,10	**CONSTRUCTION DRAWINGS**				
8,10,1	Contractor to provide printed A1/A0 of all drawings received from the Engineer for construction	No	4		
8,11	**MUNICIPALITY/ESKOM SWITCHING FEES**				
8.11.1	Contractor to allow for the disconnection and connection fees	Item	1		
8,12	**TRAINING**				
8.12.1	Training of officials in the use of the generator	Item	1		
8,13	**CERTIFICATE OF COMPLIANCE**				
8,13,1	Contractor to provide complete CoC for the entire installation in accordance to SANS and OHS Regulations	item	1		
8,14	**FILTERATION SYSTEM**				
8,14,1	Supply and install fuel filteration system with automatic, mechanical water drain with a 15A 220V supply. System to operat 24/7/365 days and filter down to 5mirons	Item	1		
8,15	**GENERAL**				
8,15,1	Contractor to trace underground cables, circuits and other services before any digging and installations at this facility	Item	1		
8,15,2	Isolate and remove cabling, circuits,existing DB etc. during installations.	Item	1		
				CARRIED FORWARD TO SECTION 11 SUMMARY	R

Department: Public Works and Infrastructure
REPUBLIC OF SOUTH AFRICA

GENERATOR INSTALLATION AT NEW HANOVER MAGISTRATE COURT
ELECTRICAL ENGINEERING SERVICES

TENDER NUMBER:

ITEM NO	DESCRIPTION	UNIT	QTY	RATE	AMOUNT
9,1	**LOW VOLTAGE SUPPLY CABLES** Supply and install the following 600/1000V PVC/SWA/PVC cables with copper conductor to SABS 1507 laid v ertically or horizontally in conduiting or ducting or clipped direct in accordance with the specifications and drawings, including fixing. (Termination elsewhere).				
9,1,1	70mm² 4C PVC SWA ECC	m	120		
9,1,2	6mm² 7 core cable with earth	m	70		
9,2	**CABLE TERMINATIONS** Termination of LV cables as specified including connection of conductors, cable lugs, captive glands, shrounds, etc. for the following cable sizes. (Supply and Install)				
9,2,1	70mm² 4C PVC SWA ECC	No	4		
9,2,2	50mm² Insulated Earth Conductor ECC	No	4		
9,2,3	6mm² 7 core cable with earth	No	2		
9,3	**INSULATED EARTH COPPER CONDUCTOR ECC** Supply and install 600/1000V conductors and bare stranded copper conductors on wire ways or trenching including terminations for earthing in accordance with the specifications and drawings				
9,3,1	50mm² Insulated Earth conductor ECC	m	120		
9,4	**CABLE SLEEVES AND PIPES**				
9,4,1	110mm Diameter	m	120		
9,4,2	110mm Diameter Slow bends	No	4		
9,5	**EARTHING AND ASSECCORIES** Supply and install 1.2 m long copper coated earth spike incl earth clamp and earth coupling on Distribution Board				
9,5,1	1.2m earth spike supply Install	 No No	 4 4		
9,5,2	Lightning and Earthing Installation for this installation with a Certificate (Allowable Resistance less than 10 ohms) at generator & Main DB	No	1		
9,6	**JOINTING KIT** Supply and install jointing of LV cables as specified above with all the accessories :				
9,6,1	Prysmian Resin Filled Cable Joints 70mm²	No	1		
9,6,2	Prysmian Resin Filled Cable Joints 50mm²	No	1		
				CARRIED FORWARD	R

Department: Public Works and Infrastructure
REPUBLIC OF SOUTH AFRICA

GENERATOR INSTALLATION AT NEW HANOVER MAGISTRATE COURT
ELECTRICAL ENGINEERING SERVICES

TENDER NUMBER:

ITEM NO	DESCRIPTION	UNIT	QTY	RATE	AMOUNT
				BROUGHT FORWARD	R
9,7	**DISTRIBUTION BOARDS** Work includes installing new labels, danger signs, updating legends, general cleaning, repairs to wiring, tightening of loose connections and DB enclosure, and issuing of CoC for distribution boards. The contractor must allow for the tracing of circuits on the main DB. Installation of essential main cable on DB.				
9,7,1	Main Distribution Board Court House	item	1		
9,7,2	Supply and install 4 pole 40kA surge arrester, type 1&2	No	1		
9,8	**CIRCUIT BREAKERS**				
9,8,1	150Ampere TP 10kA 400V AC	No	1		
	ISOLATORS				
9,8,4	160-200 Ampere TP 10kA 400V AC	No	1		
9,9	**SPRAY PAINT EXISTING DISTRIBUTION BOARD/PANEL**				
9,9,1	Work includes spray painting the DB faces plates and doors from white/grey to red for all distribution boards	No	4		
9,10	**WARNING TAPE**				
9,10,1	Cable warning tape placed 150mm above cable in excavations.	m	120		
9,11	**SMALL POWER, CONDUIT, ETC.**				
	PVC conduit placed in position for casting in concrete or screed, for building or chasing in concrete or brickwork, and surface mounting in ceiling voids including bending, short lengths, draw boxes, couplings, bends, tees and saddles				
9,11,1	20mm Diameter Conduit	m	50		
	25 x 16 mm PVC Trunking	m	40		
9,11,2	Round PVC conduit box with covers 20mm Three Way	No	5		
9,12	**CONDUCTORS** PVC insulated stranded copper conductors drawn into wireways and trunking including terminations and connections				
9,12,1	2.5mm²	m	200		
9,13	**LIGHTING** Supply and Install luminaires or equipment complete with lamps, connections, etc. mounted in position				
9,13,1	Round LED fitting 20W with an Aluminium base	No	2		
9,13,2	20A Photoelectric daylight sensitive switch complete with base	No	1		
				CARRIED FORWARD TO SECTION 11 SUMMARY	R

public works & infrastructure
Department: Public Works and Infrastructure
REPUBLIC OF SOUTH AFRICA

GENERATOR INSTALLATION AT NEW HANOVER MAGISTRATE COURT
ELECTRICAL ENGINEERING SERVICES

TENDER NUMBER:

ITEM NO	DESCRIPTION	UNIT	QTY	RATE	AMOUNT
10,0	**CIVIL WORKS** Civil works include site clearance, excavation for eletrical cables trenching, geotechnical and/or structural elements investigations.				
10,1	**CABLE TRENCH AND ACCESSORIES**				
10,1,1	Excavation and backfilling in soft soil	m³	60		
10,1,2	Excavation and backfilling in hard rock	m³	30		
10,1,3	Back Fill River Sand 300mm wide & 600mm deep	m³	60		
10,1,4	Back Fill Trenches and compaction	m³	60		
10,1,5	Danger Tape	m	120		
10,2	**ELECTRICAL MANHOLE** Supply and build either pre-cast or full wall manhole withlight duty cover with the following minimum inside dimensions: - 650 x 650 x 600mm deep				
10,2,1	Electrical Manhole	No	2		
10,3	110mm Diam. Sleeve to be installed in plinth for electrical cable and connection	m	10		
10,4	Concrete surface around the plinth 150mm with re-inforcements and mesh. Re-surface with crusher stone(100mm) and compact before applying concrete	m²	25		
10,5	Supply and install fully hot dipped galvanized diamond mesh fencing 3.15mm thick and a height of 2.7m with 4mm straining wire at a 400mm spacing around the generator installation. Install concrete beam at the bottom and use as fixtures for the wire.	m²	30		
10,6	Fully Hot Dipped Galvanized Poles Dia 100	No	8		
10,7	Fully hot dipped galvanized gate with locking mechanism and a pad lock(50mm tubed gate)	Unit	1		
10,8	Razor Wore coiled Dia. 600 above the fencing with fixtures	m²	30		
10,9	Supply and install paving slabs 600 x 600 x 50mm from the tarred surface to the generator. The base must be levelled, re-filled, compacted and soil poisoned before installing. All joints must be cemented and create drainages for the	m²	25		
10,10	Concrete of Surfaces to match existing	m²	25		
10,11	Retarring of roardway and surfaces to match existing	m²	20		
10,12	Undercoat & Painting of the internal wall surfaces to match the existing	m²	20		
10,13	Connect water system with a tap next to the generator. Supply to be taken from the nearest water point at the facility. Allow for copper pipe, fittings, holder battons, and a garden hose	Item	1		
				CARRIED FORWARD TO SECTION 11 SUMMARY	**R**

Department:
Public Works and Infrastructure
REPUBLIC OF SOUTH AFRICA

GENERATOR INSTALLATION
ELECTRICAL ENGINEERING SERVICES

TENDER NUMBER:

SECTION 11: FINAL SUMMARY

SECTION		AMOUNT
1	PRELIMINARIES AND GENERAL	R
2	MSINGA GENERATOR INSTALLATION	R
3	MSINGA ELECTRICAL INSTALLATION	R
4	MSINGA STRUCTURAL INSTALLATION	R
5	NQUTHU GENERATOR INSTALLATION	R
6	NQUTHU ELECTRICAL INSTALLATION	R
7	NQUTHU STRUCTURAL INSTALLATION	R
8	NEW HANOVER GENERATOR INSTALLATION	R
9	NEW HANOVER ELECTRICAL INSTALLATION	R
10	NEW HANOVER STRUCTURAL INSTALLATION	R
11	TOTAL TENDERED VALUE EXCLUDING. VAT.	R
12	15% VAT	R
13	TOTAL TENDERED VALUE INCLUDING VAT. CARRIED TO FORM OF OFFER AND ACCEPTANCE DPW-07(EC)	R

public works
& infrastructure

Department:
Public Works and Infrastructure
REPUBLIC OF SOUTH AFRICA

SPECIFICATIONS

&

BILLS OF QUANTITIES

DEPARTMENT OF JUSTICE
NEW HANOVER
MSINGA
NQUTHU

INSTALLATION OF A GENERATOR

PROJECT CODE: 056731

ELECTRICAL INSTALLATION

JULY 2023

INSTALLTION OF A GENERATOR
DEPARTMENT OF JUSTICE
WCS0567321
NEW HANOVER
MSINGA
NQUTHU

CONSISTING OF:

ELECTRICAL WORK

PART 1: General	Page 3-13
PART 2: Installation Details	Page 14 -21
PART 3: Quality Specification for Materials and Equipment of Electrical Installations	Page 22 -56
PART 4: Outdoor Generator Specifications	Page 57-95
PART 5: Electrical Work Material Schedule & Annexure A	Page 96-98
PART 6: Drawings	Page 99-99
PART 7: Annexure B -Bills of Quantities	Page 100-100

REGIONAL OFFICE: Department of Public Works: DURBAN
Private Bag x54315
DURBAN
4000

PART 1: GENERAL

NOTICE TO TENDERERS

1. The tenderer for the principal electrical contract shall submit additional information regarding the installers of the Specialist Electrical Installations (Parts B and C) together with the returnable enclosed with the tender enquiry documents
2. The Electrical Contractor shall submit the schedules of information for each installation with his tender.
3. Failure to compile / return the schedules may disqualify the Tender as it will not be possible to adjudicate the offer.
4. Drawings accompany this tender and will form part of this Specification.

PART A: GENERAL ELECTRICAL INSTALLATIONS

PART 1: GENERAL

CLAUSE	DESCRIPTION
1	TESTS
2	MAINTENANCE OF INSTALLATIONS
3	REGULATIONS
4	NOTICES AND FEES
5	SCHEDULE OF FITTINGS
6	QUALITY OF MATERIALS
7	CONDUIT AND ACCESSORIES
8	CONDUIT IN ROOF SPACES
9	SURFACE MOUNTED CONDUIT
10	CONDUIT IN CONCRETE SLABS
11	FLEXIBLE CONNECTIONS FOR CONNECTING UP OF STOVES, MACHINES ETC.
12	WIRING
13	SWITCHES AND SOCKET OUTLETS
14	SWITCHGEAR
15	SWITCHBOARDS
16	WORKMANSHIP AND STAFF
17	CERTIFICATE OF COMPLIANCE
18	EARTHING OF INSTALLATION
19	MOUNTING AND POSITIONING OF LUMINAIRES

1 TESTS

After completion of the works and before first delivery is taken, a full test will be carried out on the installation, for a period of sufficient duration, to determine the satisfactory working thereof. During this period the installations will be inspected and the Contractor shall make good, to the satisfaction of the Representative/Agent, any defects which may arise.

The Contractor shall provide all instruments and equipment required for testing and any water, power and fuel required for the commissioning and testing of the installations at completion.

2 MAINTENANCE OF INSTALLATIONS

With effect from the date of the First Delivery Certificate the Contractor shall at his own expense undertake the regular servicing of the installation during the maintenance period and shall make all adjustments necessary for the correct operation thereof.

THE NORMAL CONTRACTUAL FREE MAINTENANCE AND GUARANTEE PERIOD INCLUDED IN THIS CONTRACT SHALL BE 12 MONTHS.

If during the said period the installations is not in working order for any reason for which the Contractor is responsible, or if the installations develops defects, he shall immediately upon being notified thereof take steps to remedy the defects and make any necessary adjustments.

Should such stoppages however be so frequent as to become troublesome, or should the installations otherwise prove unsatisfactory during the said period the Contractor shall, if called upon by the Representative/Agent or the Director-General, at his own expense replace the whole of the installations or such parts thereof as the Representative/Agent or the Director-General may deem necessary with apparatus specified by the Representative/Agent or the Director-General.

3 REGULATIONS

The installation shall be erected and tested in accordance with the following Acts and regulations:

a) The latest issue of SABS 0142: "Code of Practice for the Wiring of Premises",

b) The Occupational Health and Safety Act, 1993 (Act 85 of 1993) as amended,

c) The Local Government Ordinance 1939 (Ordinance 17 of 1939) as amended and the municipal by-laws and any special requirements of the local supply authority,

d) The Fire Brigade services Act 1993 Act 99 of 1987 as amended,

e) The National Building Regulations and Building Standards Act 1977 (Act 103 of 1977) as amended,

f) The Post Office Act 1958 (Act 44 of 1958) as amended,

g) The Electricity Act 1984 (Act 41 of 1984) as amended and

h) The Regulations of the local Gas Board where applicable.

4 NOTICES AND FEES

The Contractor shall give all notices required by and pay all necessary fees, including any connection and inspection fees, which may be due to the local Supply Authority.

5 SCHEDULE OF FITTINGS

In all instances where schedule of light, socket outlet and power points are attached to or included on the drawings, these schedules are to be regarded as forming part of the specification.

6 QUALITY OF MATERIALS

Only materials of first class quality shall be used and all materials shall be subject to the approval of the Department. Departmental specifications for various materials to be used on this Contract are attached to and form part of this specification.

Wherever applicable the material is to comply with the relevant South African Bureau of Standards, specifications, or to British Standard Specifications, where no SABS Specifications exist.

Materials wherever possible, must be of South African manufacture.

7 CONDUIT AND ACCESSORIES

The type of conduit and accessories required for the service, i.e. whether the conduit and accessories shall be of the screwed type, plain-end type or of the non-metallic type and whether metallic conduit shall be black enamelled or galvanised, is specified in Part 2 of this specification.

Unless other methods of installation are specified for certain circuits, the installation shall be in conduit throughout. No open wiring in roof spaces or elsewhere will be permitted.

The conduit and conduit accessories shall comply fully with the applicable SABS specifications as set out below and the conduit shall bear the mark of approval of the South African Bureau of Standards.

a) Screwed metallic conduit and accessories: SABS 1065, parts 1 and 2.

b) Plain-end metallic conduit and accessories: SABS 1065, parts 1 and 2.

c) Non-metallic conduit and accessories: SABS 950

All conduit fittings, except couplings, shall be of the inspection type. Where cast metal conduit accessories are used, these shall be of malleable iron. Zinc base fittings will not be allowed.

Bushes used for metallic conduit shall be brass and shall be provided in addition to locknuts at all points where the conduit terminates at switchboards, switch-boxes, draw-boxes, etc. Draw-boxes are to be provided in accordance with the "Wiring Code" and wherever necessary to facilitate easy wiring.

For light and socket outlet circuits, the conduit used shall have an external diameter of 20mm. In all other instances the sizes of conduit shall be in accordance with the "Wiring Code" for the specified number and size of conductors, unless otherwise directed in part 2 of this specification or indicated on the drawings.

Only one manufactured type of conduit and conduit accessories will be permitted throughout the installation.

Running joints in screwed conduit are to be avoided as far as possible and all conduit

systems shall be set or bent to the required angles. The use of normal bends must be kept to a minimum with exception of larger diameter conduits where the use of such bends is essential.

All metallic conduits shall be manufactured of mild steel with a minimum thickness of 1,2mm for plain-end conduit and 1,6mm in respect of screwed conduit.

Under no circumstances will conduit having a wall thickness of less than 1,6mm be allowed in screeding laid on top of concrete slabs.

Bending and setting of conduit must be done with special bending apparatus manufactured for the purpose and which are obtainable from the manufacturers of the conduit systems. Damage to conduit resulting from the use of incorrect bending apparatus or methods applied must on indication by the Department's inspectorate staff, be completely removed and rectified and any wiring already drawn into such damaged conduits must be completely renewed at the Contractor's expense.

Conduit and conduit accessories used for flame-proof or explosion proof installations and for the suspension of luminaires as well as all load bearing conduit shall in all instances be of the metallic screwed type.

All conduit and accessories used in areas within 50 km of the coast shall be galvanised to SABS 763.

Tenderers must ensure that general approval of the proposed conduit system to be used is obtained from the local electricity supply authority prior to the submission of their tender. Under no circumstances will consideration be given by the Department to any claim submitted by the Contractor which may result from a lack of knowledge in regard to the supply authority's requirements.

8 CONDUIT IN ROOF SPACES

Conduit in roof spaces shall be installed parallel or at right angles to the roof members and shall be secured at intervals not exceeding 1,5m by means of saddles screwed to the roof timbers.

Nail or crumpets will not be allowed.

Where non-metallic conduit has been specified for a particular service, the conduit shall be supported and fixed with saddles with a maximum spacing of 450 mm. The Contractor shall supply and install all additional supporting timbers in the roof space as required.

Under flat roofs, in false ceilings or where there is less than 0,9m of clearance, or should the ceilings be insulated with glass wool or other insulating material, the conduit shall be installed in such a manner as to allow for all wiring to be executed from below the ceilings.

Conduit runs from distribution boards shall, where possible terminate in fabricated sheet steel draw-boxes installed directly above or in close proximity to the boards.

9 SURFACE MOUNTED CONDUIT

Wherever possible, the conduit installation is to be concealed in the building work; however, where unavoidable or otherwise specified under Part 2 of the specification, conduit installed

on the surface must be plumbed or levelled and only straight lengths shall be used.

The use of inspection bends is to be avoided and instead the conduit shall be set uniformly and inspection coupling used where necessary.

No threads will be permitted to show when the conduit installation is complete, except where running couplings have been employed.

Running couplings are only to be used where unavoidable, and shall be fitted with a sliced coupling as a lock-nut.

Conduit is to be run on approved spaced saddles rigidly secured to the walls.

Alternatively, fittings, tees, boxes, couplings etc., are to be cut into the surface to allow the conduit to fit flush against the surface. Conduit is to be bedded into any wall irregularities to avoid gaps between the surface and the conduit.

Crossing of conduits is to be avoided; however, should it be necessary purpose-made metal boxes are to be provided at the junction. The finish of the boxes and positioning shall be in keeping with the general layout.

Where several conduits are installed side by side, they shall be evenly spaced and grouped under one purpose-made saddle.

Distribution boards, draw-boxes, industrial switches and socket outlets etc., shall be neatly recessed into the surface to avoid double sets.

In situations where there are no ceilings the conduits are to be run along the wall plates and the beams.

Painting of surface conduit shall match the colour of the adjacent wall finishes.

Only approved plugging materials such as aluminium inserts, fibre plugs, plastic plugs, etc., and round-head screws shall be used for fixing saddles, switches, socket outlets, etc., to walls, wood plugs and the plugging in joints in brick walls are not acceptable.

10 CONDUIT IN CONCRETE SLABS

In order not to delay building operations the Contractor must ensure that all conduits and other electrical equipment which are to be cast in the concrete columns and slabs are installed in good time.

The Contractor shall have a representative in attendance at all times when the casting of concrete takes place.

Draw-boxes, expansion joint boxes and round conduit boxes are to be provided where necessary. Sharp bends of any nature will not be allowed in concrete slabs.

Draw and/or inspection boxes shall be grouped under one common cover plate, and must preferable be installed in passages or male toilets.

All boxes, etc., are to be securely fixed to the shuttering to prevent displacement when concrete is cast. The conduit shall be supported and secured at regular intervals and installed as close as possible to the neutral axis of concrete slabs and/or beams.

Before any concrete slabs are cast, all conduit droppers to switchboards shall be neatly spaced and rigidly fixed.

11 FLEXIBLE CONNECTIONS FOR CONNECTING UP OF STOVES, MACHINES, ETC.

Flexible tubing connections shall be of galvanised steel construction, and in damp situations of the plastic sheathed galvanised steel type. Other types may only be used subject to the prior approval of the Department's site electrical representative.

Connectors for coupling onto the flexible tubing shall be of the gland or screw-in types, manufactured of either brass or cadmium or zinc plated mild steel, and the connectors after having been fixed onto the tubing, shall be durable and mechanically sound.

Aluminium and zinc alloy connectors will not be acceptable.

12 WIRING:

Except where otherwise specified in Part 2 of this specification, wiring shall be carried out in conduit throughout. Only one circuit per conduit will be permitted.

No wiring shall be drawn into conduit until the conduit installation has been completed and all conduit ends provided with bushes. All conduit to be clear of moisture and debris before wiring is commenced.

Unless otherwise specified in Part 2 of this specification or indicated on the service drawings, the wiring of the installation shall be carried out in accordance with the "Wiring Code". Further to the requirements concerning the installation of earth conductors to certain light points as set out in the "Wiring Code" , it is a specific requirement of this document that where plain-end metallic conduit or non-metallic conduit has been used, earth conductors must be provided and drawn into the conduit with the main conductors to all points, including all luminaires and switches throughout the installation.

Wiring for lighting circuits is to be carried out with 2,5mm² conductors and a 2,5mm² earth conductor. For socket outlet circuits the wiring shall comprise 4mm² conductors and a 2,5mm² earth conductor. In certain instances, as will be directed in Part 2 of this specification, the sizes of the aforementioned conductors may be increased for specified circuits. Sizes of conductors to be drawn into conduit in all other instances, such as feeders to distribution boards, power points etc., shall be as specified elsewhere in this specification or indicated on the drawings. Sizes of conductors not specified must be determined in accordance with the "Wiring Code".

The loop-in system shall be followed throughout, and no joints of any description will be permitted.

The wiring shall be done in PVC insulated 600/1000 V grade cable to SABS 150.

Where cable ends connect onto switches, luminaires etc., the end strands must be neatly and tightly twisted together and firmly secured. Cutting away of wire strands of any cable will not be allowed.

13 SWITCHES AND SOCKET OUTLETS

All switches and switch-socket outlet combination units shall conform to the Department Quality Specifications which form part of this specification.

No other than 16A 3 pin sockets are to be used, unless other special purpose types are distinctly specified or shown on the drawings.

All light switches shall be installed at 1,4m above finished floor level and all socket outlets as directed in the Schedule of Fittings which forms part of this specification or alternatively the height of socket outlets may be indicated on the drawings.

14 SWITCHGEAR

Switchgear, which includes circuit breakers, iron-clad switches, interlocked switch-socket outlet units, contactors, time switches, etc., is to be in accordance with the Departmental Quality Specifications which form part of this specification and shall be equal and similar in quality to such brands as may be specified.

For uniform appearance of switchboards, only one approved make of each of the different classes of switchgear mentioned in the Quality Specifications shall be used throughout the installations.

15 SWITCHBOARDS

All boards shall be in accordance with the types as specified, be constructed according to the detail or type drawings and must be approved by the Department before installation.

In all instances where provision is to be made on boards for the supply authority's main switch and/or metering equipment the contractor must ensure that all requirements of the authorities concerned in this respect are met.

Any construction or standard type aboard proposed as an alternative to that specified, must have the prior approval of the Department.

All bus bars, wiring, terminals, etc., are to be adequately insulated and all wiring is to enter the switchgear from the back of the board. The switchgear shall be mounted within the boards to give a flush front panel. Cable and boxes and other ancillary equipment must be provided where required.

Clearly engraved labels are to be mounted on or below every switch. The working of the labels in English and Afrikaans, is to be according to the lay-out drawings or as directed by the Department's representative and must be confirmed on site. Flush mounted boards to be installed with the top of the board 2,0m above the finished floor level.

16 WORKMANSHIP AND STAFF

Except in the case of electrical installations supplied by a single phase electricity supply at the point of supply, an accredited person shall exercise general control over all electrical installation work being carried out.

The workmanship shall be of the highest grade and to the satisfaction of the Department.

All inferior work shall, on indication by the Department's inspecting officers, immediately be removed and rectified by and at the expense of the Contractor.

17 CERTIFICATE OF COMPLIANCE

On completion of the service, a certificate of compliance must be issued to the Department's

Representative/Agent in terms of the Occupational Health and Safety Act, 1993 (Act 85 of 1993).

18 EARTHING OF INSTALLATION

Main earthing

The type of main earthing must be as required by the supply authority if other than the Departments, and in any event as directed by the Department's representative, who may require additional earthing to meet test standards.

Where required an earth mat shall be provided, the minimum size, unless otherwise specified, being 1,0m x 1,0m and consisting of 4mm diameter hard-drawn bare copper wires at 250mm centres, brazed at all intersections.

Alternatively or additionally earth rods or trench earths may be required as specified or directed by the Department's authorised representative.

Installations shall be effectively earthed in accordance with the "Wiring Code" and to the requirements of the supply authority. All earth conductors shall be stranded copper with or without green PVC installation.

Connection from the main earth bar on the main board must be made to the cold water main, the incoming service earth conductor, if any and the earth mat or other local electrode by means of 12mm x 1,60 mm solid copper strapping or 16 mm^2 stranded (not solid) bare copper wire or such conductor as the Department's representative may direct. Main earth copper strapping where installed below 3m from ground level, must be run in 20 mm diameter conduit securely fixed to the walls.

All other hot and cold water pipes shall be connected with 12mm x 0,8mm perforated for solid copper strapping (not conductors) to the nearest switchboard. The strapping shall be fixed to the pipework with brass nuts and bolts and against walls with brass screws at 150 mm centres. In all cases where metal water pipes, down pipes, flues, etc., are positioned within 1,6m of switchboards an earth connection consisting of copper strapping shall be installed between the pipework and the board. In vertical building ducts accommodating both metal water pipes and electrical cables, all the pipes shall be earthed at each distribution board.

Roofs, gutters and down pipes

Where service connections consist of overhead conductors, all metal parts of roofs, gutters and down pipes shall be earthed. One bare 10mm^2 copper conductor shall be installed over the full length of the ceiling void, fixed to the top purlin and connected to the main earth conductor and each switchboard. The roof and gutters shall be connected at 15m intervals to this conductor by means of 12mm X 0,8mm copper strapping (not conductors) and galvanised bolts and nuts. Self-tapping screws are not acceptable. Where service connections consist of underground supplies, the above requirements are not applicable.

Sub-distribution boards

A separate earth connection shall be supplied between the earth busbar in each sub-distribution board and the earth busbar in the Main Switchboard. These connections shall consist of bare or insulated stranded copper conductors installed along the same routes as the supply cables or in the same conduit as the supply conductors. Alternatively armoured cables with earth continuity conductors included in the armouring may be utilised where specified or approved.

Sub-circuits

The earth conductors of fall sub-circuits shall be connected to the earth busbar in the supply board in accordance with SABS 0142.

Ring Mains

Common earth conductors may be used where various circuits are installed in the same wire way in accordance with SABS 0142. In such instances the sizes of earth conductors shall be equivalent to that of the largest current carrying conductor installed in the wire way, alternatively the size of the conductor shall be as directed by the Engineer. Earth conductors for individual circuits branching from the ring main shall by connected to the common earth conductor with T-ferrules or soldered. The common earth shall not be broken.

Non-metallic Conduit

Where non-metallic conduit is specified or allowed, the installation shall comply with the Department's standard quality specification for "conduit and conduit accessories".

Standard copper earth conductors shall be installed in the conduits and fixed securely to all metal appliances and equipment, including metal switch boxes, socket-outlet boxes, draw-boxes, switchboards, luminaires, etc. The securing of earth conductors by means of self-threading screws will not be permitted.

Flexible Conduit

An earth conductor shall be installed in all non-metal flexible conduits. This earth conductor shall not be installed externally to the flexible conduit but within the conduit with the other conductors. The earth conductor shall be connected to the earth terminals at both ends of the circuit.

Connection

Under no circumstances shall any connection points, bolts, screws, etc., used for earthing be utilised for any other purpose. It will be the responsibility of the Contractor to supply and fit earth terminals or clamps on equipment and materials that must be earthed where these are not provided.

Unless earth conductors are connected to proper terminals, the end shall be tinned and lugged.

19 MOUNTING AND POSITIONING OF LUMINAIRES

The Contractor is to note that in the case of board and acoustic tile ceilings, i.e. as opposed to concrete slabs, close co-operation with the building contractor is necessary to ensure that as far as possible the luminaires are symmetrically positioned with regard to the ceiling pattern.

The lay-out of the luminaires as indicated on the drawings must be adhered to as far as possible and must be confirmed with the Department's representative.

Fluorescent luminaires installed against concrete ceilings shall be screwed to the outlet boxes and in addition 2 x 6mm expansion or other approved type fixing bolts are to be provided. The bolts are to be ¾ of the length of the luminaires apart.

Fluorescent luminaires to be mounted on board ceilings shall be secured by means of two 40mm x No. 10 round head screws and washers. The luminaires shall also be bonded to the circuit conduit by means of locknuts and brass bushes. The fixing screws are to be placed ¾ of the length of the fitting apart.

Earth conductors must be drawn in with the circuit wiring and connected to the earthing terminal of all fluorescent luminaires as well as other luminaires exposed to the weather in accordance with the "Wiring Code".

Incandescent luminaires are to be screwed directly to outlet boxes in concrete slabs. Against board ceilings the luminaires shall be secured to the brandering or joists by means of two 40mm x No. 8 round head screws.

PART 2: INSTALLATION DETAILS

CLAUSE	DESCRIPTION
1	CABLE SLEEVE PIPES
2	NOTICES
3	ELECTRICAL EQUIPMENT
4	DRAWINGS
5	BALANCING OF LOAD
6	SERVICE CONDITIONS
7	SWITCHES AND SOCKET OUTLETS
8	LIGHT FITTINGS AND LAMPS
9	EARTHING AND BONDING
10	MAINTENANCE OF ELECTRICAL SUPPLY
11	EXTENT OF WORK
12	ELECTRICAL INSTALLATION
13	MAIN LOW TENSION SWITCHBOARD
14	STANDBY EMERGENCY PLANT
15	CABLES
16	CONDUIT AND WIRING
17	LIGHTING INSTALLATION
18	LIGHTING SWITCHES
19	SINGLE PHASE SWITCHED SOCKET OUTLETS
20	LIGHTNING AND EARTHING INSTALLATION
21	SCHEDULE OF DISTRIBUTION BOARDS
22	DISTRIBUTION BOARDS AND CIRCUITING
23	SCHEDULE OF CABLES, CONDUIT AND WIRING
24	BONDING TRAYS, JUNCTION AND DRAW BOXES
25	BUILDING WORK

1 CABLE SLEEVE PIPES

1.1 Where cables cross under roadways, other services and where cables enter building, the cables shall be installed in ribbed, flexible, 100 ø high density polyethylene pipes.

1.2 The ends of all sleeves shall be sealed with a non-hardening watertight compound after the installation of cables. All sleeves intended for future use shall likewise be sealed.

2 NOTICES

The Contractor shall issue all notices and make the necessary arrangements with Supply Authorities, the Postmaster-General SA, Transport Services, Provincial or National Road Authorities and other authorities as may be required with respect to the installation.

3 ELECTRICAL EQUIPMENT

All equipment and fittings supplied must be in accordance with the attached quality specification (Part 3 of this document), suitable for the relevant supply voltage, and frequency and must be approved by the Department's representative.

4 DRAWINGS

4.1 The drawings generally show the scope and extent of the proposed work and shall not be held as showing every minute detail of the work to be executed.

4.2 The position of power points, switches and light points that may be influenced by built-in furniture must be established on site, prior to these items being built in.

5 BALANCING OF LOAD

5.1 The Contractor is required to balance the load as equally as possible over the multiphase supply, at each distribution board and at the main low tension switchboard.

5.2 Test readings are to be submitted in writing to the Department's Representative for their comments and approval.

6 SERVICE CONDITIONS

All plant shall be designed for the climatic conditions appertaining to the service.

7 SWITCHES AND SOCKET OUTLETS

The installation of switches and socket outlets must conform to clause 13 of Part 1 of this specification.

8 LIGHT FITTINGS AND LAMPS

8.1 The installation and mounting of luminaries must conform to clause 19 of Part 1 of this specification.

8.2 All fittings to be supplied by the Contractor shall have the approval of the Department. Incandescent lamps shall bear the approved mark of the S.A.B.S. and shall have the British light centre length.

9 EARTHING AND BONDING

The Contractor will be responsible for all earthing and bonding of the installation. The earthing and bonding is to be carried out strictly as described in clause 18 of Part 1 of this specification and to the satisfaction of the Department's representative.

10 MAINTENANCE OF ELECTRICAL SUPPLY

All interruptions of the electrical supply that may be necessary for the execution of the work, and subsequent repair and maintenance will be subject to prior arrangement between the Contractor and the user Department and the Department's representative.

11 EXTENT OF WORK

11.1 The work covered by this contract comprises the complete electrical installation and handing over in working order, as per this specification, including the supply and installation of all panels, equipment and accessories that accompany this installation.

11.2 The following electrical elements are to be carried out under this contract:-

NEW HANOVER DOJ

1. Identify the main LV Board in the Facility and the circuits. Identify the main supply from ESKOM at this facility, breaker size and fault levels. Work out the best route for the cable with the no disruptions to the services and running of the facility.
2. Install a new cable from the supply Mini -Sub or Main LV Board to the generator changeover and then to the main distribution board.
3. The electrical installation in its entirety.
4. Connect cables and breaker on the main DB, check all existing circuits and make sure all circuits are labelled. Distribution Board must be wired correctly, load balanced and a danger sign on the door.
5. Lightning Protection and earthing Installation (by Specialist Sub Contractor).
6. Supply, install, commission and maintain a 100kVA Diesel generator/alternator installations (By a specialist sub-contractor). The generator will be placed on a plinth, the position will be shown on site and the plinth must carry this load.
7. Tracing of circuits, spray-painting of distribution boards & numbering of circuits. All the distribution boards that are supplied via the generator in this entire facility must be identified with RED. Panels must be painted RED and labelled as Essential.
8. Installation of earthing and testing with a certificate by a specialist contractor.
9. The contractor to make arrangement with ESKOM or Municipality to switch off main supply for terminations and installations.
10. Building related work and installation as per our Civil/Structural Engineer scope and installation methodology listed on the BOQ.

11.3 The following electrical elements are to be carried out under this contract:-

MSINGA DOJ

1. Identify the main Distribution Board in the Facility and the circuits. Identify the main supply from municipality at this facility, breaker size and fault levels. Work out the best route for the cable with the no disruptions to the services and running of the facility.
2. Install a new cable from the municipal supply to the generator changeover and then to the main distribution board.
3. The electrical installation in its entirety.
4. Connect cables and breaker on the main DB, check all existing circuits and make sure all circuits are labelled. Distribution Board must be wired correctly, load balanced and a danger sign on the door.
5. Lightning Protection and earthing Installation (by Specialist Sub Contractor).
6. Supply, install, commission and maintain a 100kVA Diesel generator/alternator installations (By a specialist sub-contractor). The generator will be placed on a plinth, the position will be shown on site and the plinth must carry this load.
7. Tracing of circuits, spray-painting of distribution boards & numbering of circuits.

All the distribution boards that are supplied via the generator in this entire facility must be identified with RED. Panels must be painted RED and labelled as Essential.

8. Installation of earthing and testing with a certificate by a specialist contractor.
9. The contractor to make arrangement with ESKOM or Municipality to switch off main supply for terminations and installations.
10. Building related work and installation as per our Civil/Structural Engineer scope and installation methodology listed on the BOQ.

11.4 The following electrical elements are to be carried out under this contract:-

Nquthu DOJ

1. Identify the LV board/main Distribution Board in the Facility and the circuits. Identify the main supply from municipality at this facility, breaker size and fault levels. Work out the best route for the cable with the no disruptions to the services and running of the facility.
2. Install a cable from the LV board to the generator changeover and then to the LV board.
3. The electrical installation in its entirety.
4. Connect cables and breaker on the main DB, check all existing circuits and make sure all circuits are labelled. Distribution Board must be wired correctly, load balanced and a danger sign on the door.
5. Lightning Protection and earthing Installation (by Specialist Sub Contractor).
6. Supply, install, commission and maintain a 200kVA Diesel generator/alternator installations (By a specialist sub-contractor). The generator will be placed on a plinth, the position will be shown on site and the plinth must carry this load.
7. Tracing of circuits, spray-painting of distribution boards & numbering of circuits. All the distribution boards that are supplied via the generator in this entire facility must be identified with RED. Panels must be painted RED and labelled as Essential.
8. Installation of earthing and testing with a certificate by a specialist contractor.
9. The contractor to make arrangement with ESKOM or Municipality to switch off main supply for terminations and installations.
10. Building related work and installation as per our Civil/Structural Engineer scope and installation methodology listed on the BOQ.

Tenderers shall arrange to inspect the site and familiarise themselves with the conditions on site. Full allowance shall be made as no extras shall be entertained for ignorance of site installations and conditions and location.

12 ELECTRICAL INSTALLATION

a. Allow to work in close cooperation with the Main Contractor, provide all required information materials and equipment to be built into the works as the work progresses

b. Provide suitable supervision on site at all times. Institute quality control and ensure that all workmanship is first class.

c. The installation of the new panel is to be carefully co-ordinated with the Client Representative to allow that this work is effected timeously.

13 MAIN LOW TENSION SWITCHBOARD

a. Repairs and upgrade of the existing main Boards, must conform to the relevant fault levels and standards. Make sure fault levels are cascaded, check upstream.

14 STANDBY EMERGENCY PLANT

a. A 100 kVA (150Amp) 0.85 P.F. (New Hanover) & a 100kVA (150Amps) 0.85P.F. (Msinga Court), a 200kVA (300Amps) 0.85P.F. (Nquthu Court) outdoor type standby diesel generating set, installation complete with sensing output supply panel and battery charging circuitry, will be supplied and installed by a specialist Contractor under this contract. This generator will be installed at New Hanover, Msinga & Nquthu Courts, on a new plinth. It will be a unit in an enclosure with complete sound attenuation. The engine **will be a Volvo, Cummins, Perkins, Caterpillar, John Diere, Mtsubishi, Leroy Somer, Scania or Deutz.** The alternator **will be a Stamford, Meralli or Gen Power.** The controllers **Deep Sea, Loverto or Circom**

b. The sound attenuation of the outdoor unit shall comply with Municipal noise criteria for residential areas and the levels specified in this specification and shall be carried out under this Contract.

c. The Electrical Contractor shall supply, install and connect and test the cable and earth wire to the Standby Diesel Unit complete with the reference cable interconnecting the main changeover panel, mounted on the generator

d. Install a fuel filtration system, it must continuously filter the diesel fuel 24/7 365 days in 10 minute cycles, removing suspended particles of effective diameter. It must separate all water from the fuel tank, **mechanically, automatically** (not manually) drain water in the open, removable in a suitable position. It must meet the "General Effluent Standard" required to be disposed into the Municipal drain and sewer system.

15 CABLES

a. The Contractor shall supply and completely install all distribution cables as indicated on the drawings, listed in the Schedule of Cables, and measured in the Bill of Quantities.

b. The storage, transportation, handling and laying of the cables shall be according to first class practice, and the contractor shall have adequate and suitable equipment and labour to ensure that no damage is done to cables during such operations.

c. The cable trenches shall be excavated to a depth of 0,9m deep below ground level and shall be 450mm wide for one to three cables, and the width shall be increased where more than three cables are laid together so that the cables may be placed at least two cable diameters apart throughout the run. The bottom of the trench shall be level and clean and the bottom and sites free from rocks or stones liable to cause damage to the cable.

d. The Contractor must take all necessary precautions to prevent the trenching work being in any way a hazard to the personnel and public and to safeguard all structures, roads, sewage works or other property on the site from any risk of subsidence and damage.

e. In the trenches the cable shall be laid on a 75mm thick bed of earth and be covered with a 150mm layer of earth before the trench is filled in.

f. The laying of cables shall not be commenced until the trenches have been inspected and approved. The cable shall be removed from the drum in such a way that no twisting, tension or mechanical damage is caused and must be adequately supported at intervals during the whole operation. Particular care

must be exercised where it is necessary to draw cables through pipes and ducts to avoid abrasion, elongation or distortion of any kind. The ends of such pipes and ducts shall be sealed to approval after drawing in of the cables.

g. Backfilling (after bedding) of the trenches is to be carried out with a proper grading of the material to ensure settling without voids, and the material is to be stamped down after the addition of every 150mm. The surface is to be made good as required. This work to be carried out by the Main Contractor.

h. On each completed section of the laid and jointed cable, the insulation resistance shall be tested to approval with an approved "Megger" type instrument of not less than 2000V for low tension cables.

i. Earth continuity conductors are to be run with all underground cables constituting part of a low tension distribution system. Such continuity conductors are to be stranded bare copper of a cross-sectional area equal to at least half that one live conductor of the cable, but shall not be less than $4mm^2$ or more than $70mm^2$. A single earth wire may be used as earth continuity conductor for two or more cables run together, branch earth wires being brazed on where required.

16 CONDUIT AND WIRING

a. Conduit and conduit accessories shall be black enamelled/galvanised screwed conduit or black enamelled/galvanised plain end conduit in accordance with SABS 162, 763 and 1007 respectively.

b. All conduits, regardless of the system employed, shall be installed strictly as described in the applicable paragraphs of clauses 4 to 8 of Part 1 of the specification. Wiring of the installation shall be carried out as directed in clause 9 part 1 of this specification.

c. Where plain end conduit is offered all switches and light fittings must be supplied with a permanent earth terminal for the connection of the earth wire.

d. Lugs held by switch fixing screws or self-tapping screws will not be acceptable.

17 LIGHTING INSTALLATION

a. The Electrical Contractor shall refer to the drawings for the project whereon the lighting layouts have been shown.

b. Lighting outlets are shown having letters which form the key to luminaire types to be installed at each outlet.

c. For recessed mounted luminaries at each outlet, allow to terminate the conduit and wiring in a 5 amp socket outlet mounted in a 100 x 50 extension surface mounted box, in the roof void adjacent to the luminaires.

d. Allow to install, connect and test the luminaries detailed in this specification and as shown on drawing.

e. All recessed luminaries shall be supplied with a 3 metre cabtyre flexible cord complete with a 5 ampere plugtop.

f. Provide annular rings of tempered masonite for all recessed mounted down lighters (fluorescent or incandescent) to be placed behind the ceiling material to protect the ceiling from the springs securing the luminaire.

g. The complete luminaries inclusive of fluorescent lamps, control gear and lamp holders shall be guaranteed for a period of twelve (12) months from date of handover (incandescent lamps excluded).

h. A Schedule of luminaries is provided.

18 LIGHTING SWITCHES

a. Supply, install, connect and test lighting switches wherever shown on drawings; the switches shall be similar to 20 Ampere "Classic Range" equal and approved manufacture and 0.5 PF rating; where surface installation is required they shall be of the industrial galvanised metal clad type: Where flush mounted they shall be set into pressed metal boxes with overlapping pressed metal cover plates to Architect's choice. Provide similar boxes and conduit for AC unit switches and fan heater isolators.

b. Light and AC unit switches to be mounted 1350mm to the centre of the box from F.F.L. or as otherwise instructed on site to suit the existing installation.

c. Where mounted in partition walling they shall be the mullion type complete with metal cover plate to Architect's choice.

d. The luminaries and area lighting situated outside shall be switched by a Photocell unit set to switch in, when the ambient illuminance falls to approximately 70 lux and to switch off when the ambient illuminance rises to approximately 35 lux. The photo cell switches shall embody time delay circuiting to obviate cyclic switching in changeable weather conditions. The photo cell unit shall switch the respective lighting contactors circuits which in turn switch on the outdoor luminaire.

19 SINGLE PHASE SWITCHED SOCKET OUTLET

a. The switched socket outlets shall be of the standard round three pin, shuttered type, rated at 16A/250V and shall comply with SABS 164 – 1992 as amended and shall bear the SABS mark.

b. The plastic insulation around each pin socket shall be raised to protrude through the cover plate which shall be punched with three separate holes for the three pin sockets. The cover plates fed from normal mains power shall be white.

c. The terminal screws of the live and neutral sockets shall be recessed so that inadvertent contact with the earth conductor will be impossible when the wired switched socket outlet is pushed back into the wall mounted conduit box during installation.

d. The switched socket outlet shall be controlled by means of a white piano type lever which matches those of the light switches.

e. The switched socket outlets fed off diesel generator power shall have a "D" shaped earth pin and the plastic insulation around each pin socket shall be red. The cover plates for those switched socket outlets with "D" shaped earth pins, mounted in cobuit boxes shall also be red.

20 LIGHTNING AND EARTHING INSTALLATION

a. Employ a Specialist Lightning and Earthing Installation Contractor who shall supply and install all the required conductors and earthing rods required in accordance with SABS 042. He shall test all earth circuits and provide resistance readings and certificates.

21 SCHEDULE OF DISTRIBUTION BOARDS

In addition to clause 14 and 15 of Part 1 of this Specification the following shall also be applied to switchboards required for this service.

The contractor to maintain the existing LV boards/main distribution boards, including replacing breakers, panel enclosure, etc.

22 DISTRIBUTION BOARDS AND CIRCUITRY

The Electrical Contractor shall refer to the switchboard single line diagrams/ drawing and main line schematic whereon the respective switchboards have been detailed complete with equipment circuitry wiring, circuit breakers, earth leakage units, isolators and fault levels etc.

The circuitry must tie up with the respective lighting, power, geysers, fume cupboards, air conditioning circuits etc as indicated on the layout drawings.

23 SCHEDULE OF CABLES CONDUIT AND WIRING

23.1 Supply, install, connect and test the following cables, trunkings, conduit and wiring:

as per BOQ

24 BONDING TRAYS, JUNCTION AND DRAW BOXES

a. All junctions, trays, draw boxes, etc., must be accessible approved and generally not exposed in finished spaces and clear of other trades. Where necessary, re-route conduits or make other arrangements for concealment as approved. Support tray, junction and draw boxes independently to building structure with no weight bearing on boxes, trays, conduits etc.
b. Where drawing in of wires not included under these specifications, provide draw boxes in horizontal conduit runs every 30 metres and in accordance with the Code of Practice.
c. Outlet boxes for light fittings recessed in hung ceilings shall be accessible through the opening created by the removal of the light fitting.

25 BUILDING WORKS

25.1 The contractor to conform to the relevant work processes and concrete methodology. All tests will be witnessed including compaction. Require certificates for concrete, paving, civil works.

25.2 The painting, plastering, tarring, and paving must be done professionally and of a very high quality/standards. This will be monitored on site.

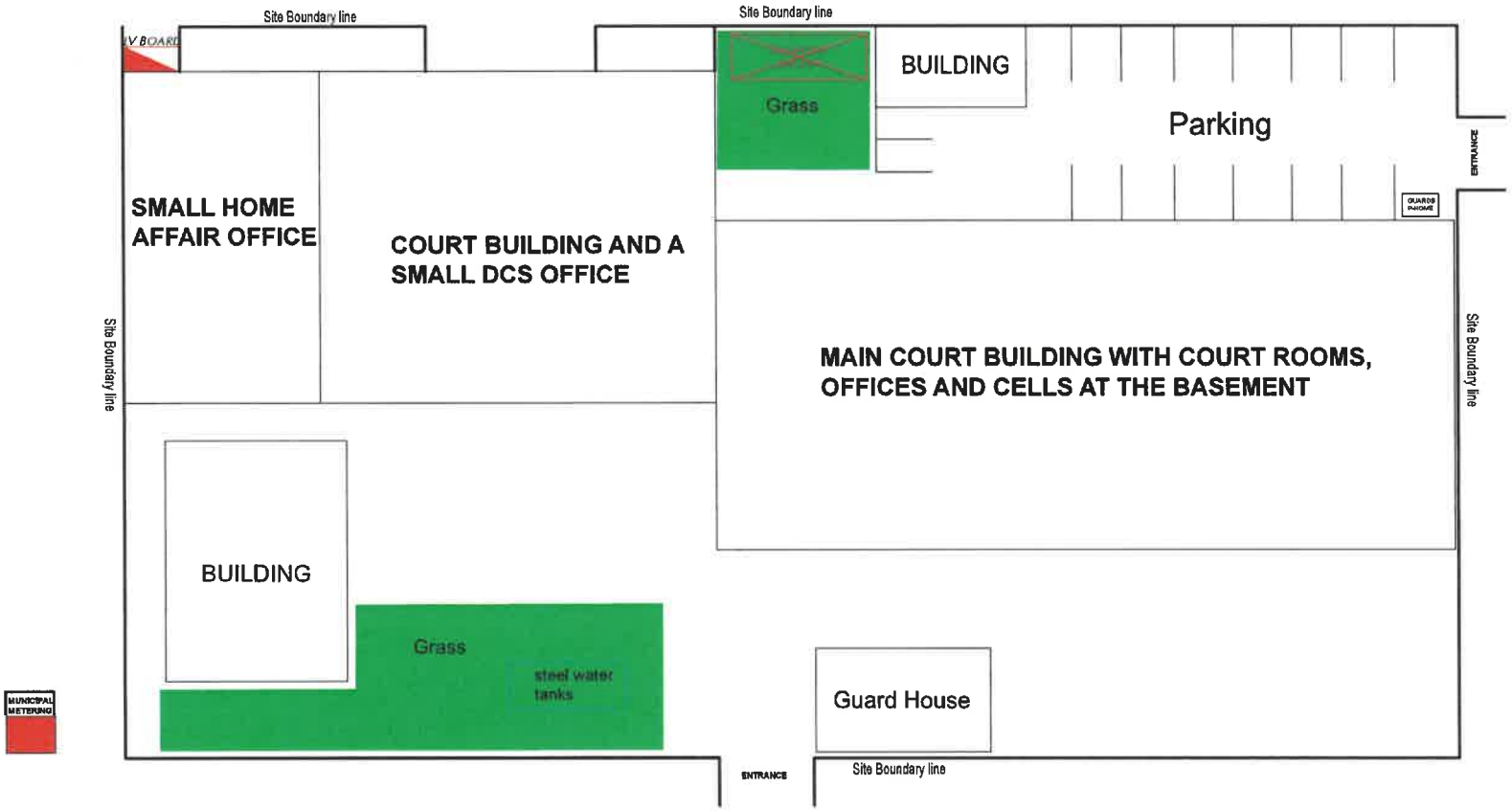

NOTES

REVISIONS

REV	DESCRIPTION	DATE	BY

LEGEND

SYM	DESCRIPTION
	Main Distribution Board

Full Name:

Professional Registration No.:

CONSULTANT

IN-HOUSE ELECTRICAL TEAM

CLIENT

DEPARTMENT OF JUSTICE

Discipline

ARCHITECTURAL

CIVIL & STRUCTURAL ENGINEERING

ELECTRICAL ENGINEERING X

MECHANICAL ENGINEERING

PROJECT TITLE

HOUTHU MAGISTRATE COURT

DRAWING TITLE

SITE LAYOUT

DRAWING ISSUED FOR:	
Information	
Preliminary Design	
Detailed Design	X
Tender	
Construction	
As Built	

CAPITAL	X	MAINTENANCE	
WCS No. 058731		Designed A.MJOKA	
Scale NTS		Drawn A.MJOKA	
Date 25-07-2023		Checked R.MAHARAJ	
Drawing No. EE058731-3		Rev No. A	Size A1

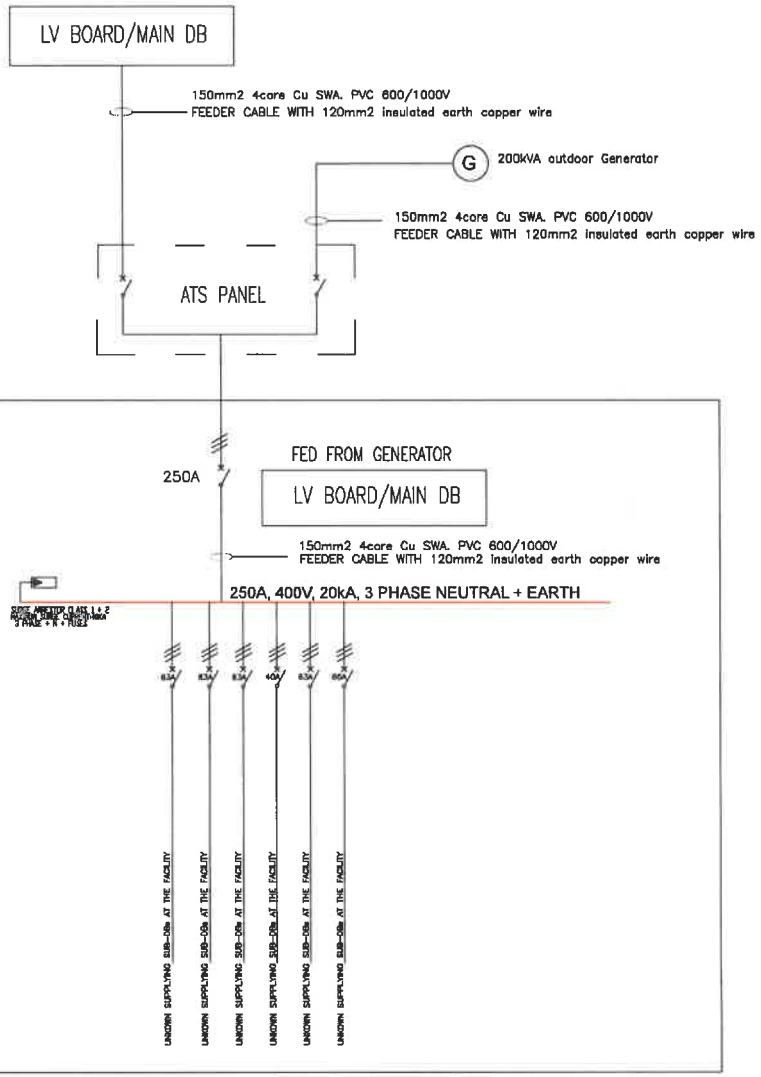

NOTES FOR DB-M(MAIN DB)

1. EXISTING: REFURBISH AS PER SINGLE LINE
2. TOP ENTRY, TOP EXIT CABLE ACCESS
3. COLOR: PAINT THE DB ENCLOSURE RED
4. EQUIPMENT = ABB/CBI/SCHNEIDER OR EQUALLY APPROVED
5. SPD = TYPE 1&2
6. CASCADING TO LOCAL SECTIONS
7. A5 LEGEND CARD
8. ENGRAVED LABELING

NOTES

THE USE OF TRADE NAMES ON THIS DRAWING IS PROHIBITED, AND ANY TRADE NAME EQUIPMENT FOR THIS PROJECT REQUIRES APPROVAL FROM THE RESPONSIBLE ENGINEER

1. BEFORE ERECTION WORK BEGINS, THE CONTRACTOR MUST VISIT SITE FOR FINAL CHECK MEASUREMENTS
2. ALL EARTHING WORK IS AS PER SANS 10142-1:2017
3. ALL CABLES ARE IN MM
4. ALL WORK TO BE DONE IN ACCORDANCE TO SANS 10142-1:2017, SANS 10142-2:2018 AND ALL OTHER SANS CODES AS DICTATED BY THE RESPONSIBLE ENGINEER

REVISIONS

REV	DESCRIPTION	DATE	BY
	DETAILED DESIGN STAGE	17-JULY-2023	KARN LOLO

LEGEND

SYM	DESCRIPTION
	ON-LOAD ISOLATOR
	CIRCUIT BREAKER
	SURGE/LIGHTING PROTECTION DEVICE
	EARTH LEAKAGE UNIT
	THREE PHASE
	SINGLE PHASE

All Rights Reserved to Department of Public Works & Infrastructure

Full Name: — — — — — —

Professional Registration No.: — — — — —

CONSULTANT

MAHOUSE ELECTRICAL TEAM

P.O. Box — 145 | Durban, 4062 South Africa
Tel: +27 (0)31 341 7776 Fax: +27 (086) 272 4724

CLIENT

DEPARTMENT OF JUSTICE

Discipline: Mark with X where applicable	
ARCHITECTURAL	
CIVIL & STRUCTURAL ENGINEERING	
ELECTRICAL ENGINEERING	X
MECHANICAL ENGINEERING	

PROJECT TITLE

NGUTHU MAGISTRATE COURT

DRAWING TITLE

SINGLE LINE DIAGRAMS

DRAWING ISSUED FOR:	
Information	
Preliminary Design	
Detailed Design	X
Tender	
Construction	
As Built	

CAPITAL	X	MAINTENANCE	
WO # No. 056731		Designed	A.MJOKA
Scale NTS		Drawn	A.MJOKA
Date 25-07-2023		Checked	R.MAHARAJ
Drawing No. EE056731-6	Rev No. A		Size A1

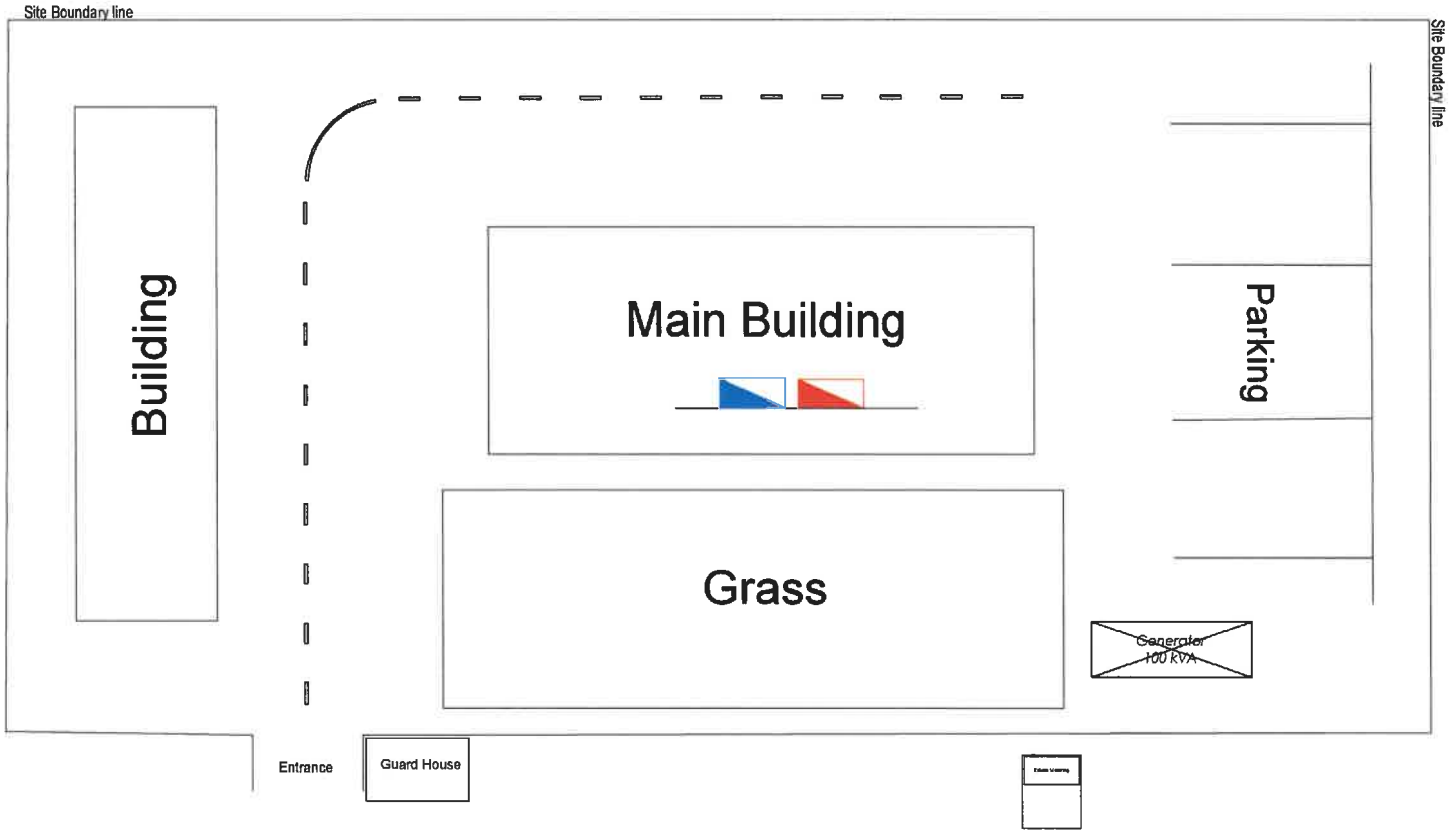

SYM	DESCRIPTION
	LV Distribution Board
	Aircon Distribution Board

DRAWING ISSUED FOR:	
Information	X
Preliminary Design	
Detailed Design	
Tender	
Construction	
As Built	

NDPWI

DEPARTMENT OF JUSTICE

PROJECT TITLE: NEW HANOVER GENERATOR

DRAWING TITLE: SITE LAYOUT

CAPITAL		MAINTENANCE	X
WC/S No. 056735		Designed	V.MAVUSO
Scale NTS		Drawn	V.MAVUSO
Date 11-07-2023		Checked	R.MAHARAJ
Drawing No. 056735-E-001	Rev No. A	Size A1	

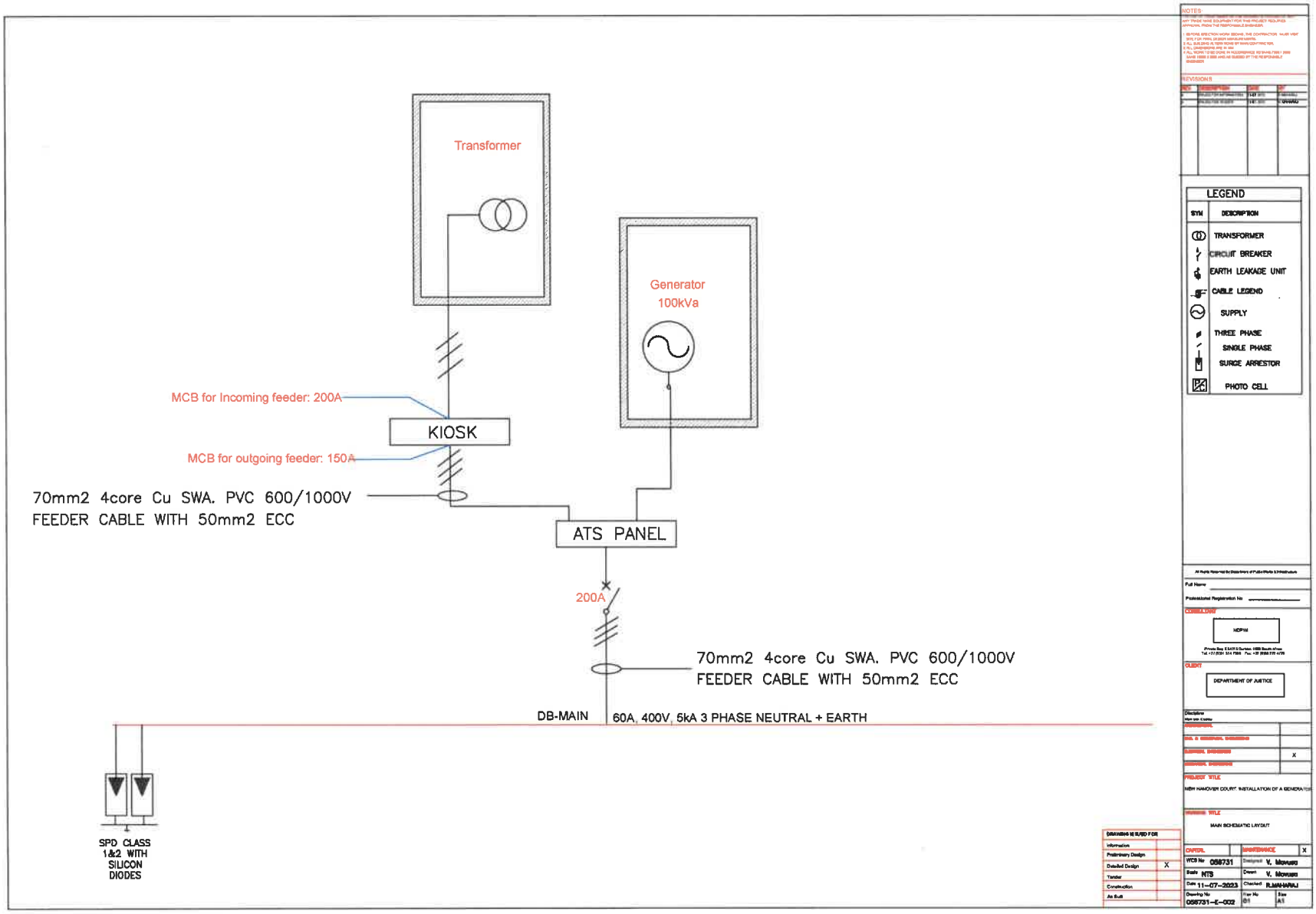

Transformer
Generator
100kVa
MCB for Incoming feeder: 200A
KIOSK
MCB for outgoing feeder: 150A
70mm2 4core Cu SWA. PVC 600/1000V
FEEDER CABLE WITH 50mm2 ECC
ATS PANEL
200A
70mm2 4core Cu SWA. PVC 600/1000V
FEEDER CABLE WITH 50mm2 ECC
DB-MAIN
60A, 400V, 5kA 3 PHASE NEUTRAL + EARTH
SPD CLASS
1&2 WITH
SILICON
DIODES
NOTES
REVISIONS
LEGEND
SYM
DESCRIPTION
TRANSFORMER
CIRCUIT BREAKER
EARTH LEAKAGE UNIT
CABLE LEGEND
SUPPLY
THREE PHASE
SINGLE PHASE
SURGE ARRESTOR
PHOTO CELL
Full Name
Professional Registration No
NDPM
CLIENT
DEPARTMENT OF JUSTICE
Discipline
PROJECT TITLE
NEW HANOVER COURT. INSTALLATION OF A GENERATOR
TITLE
MAIN SCHEMATIC LAYOUT
DRAWING ISSUED FOR
Information
Preliminary Design
Detailed Design
X
Tender
Construction
As Built
CAPITAL
MAINTENANCE
X
WCS No 058731
Designed V. Mohuno
Scale NTS
Drawn V. Mohuno
Date 11-07-2023
Checked R.MAHARAJ
Drawing No 058731-E-002
Rev No 01
Size A1

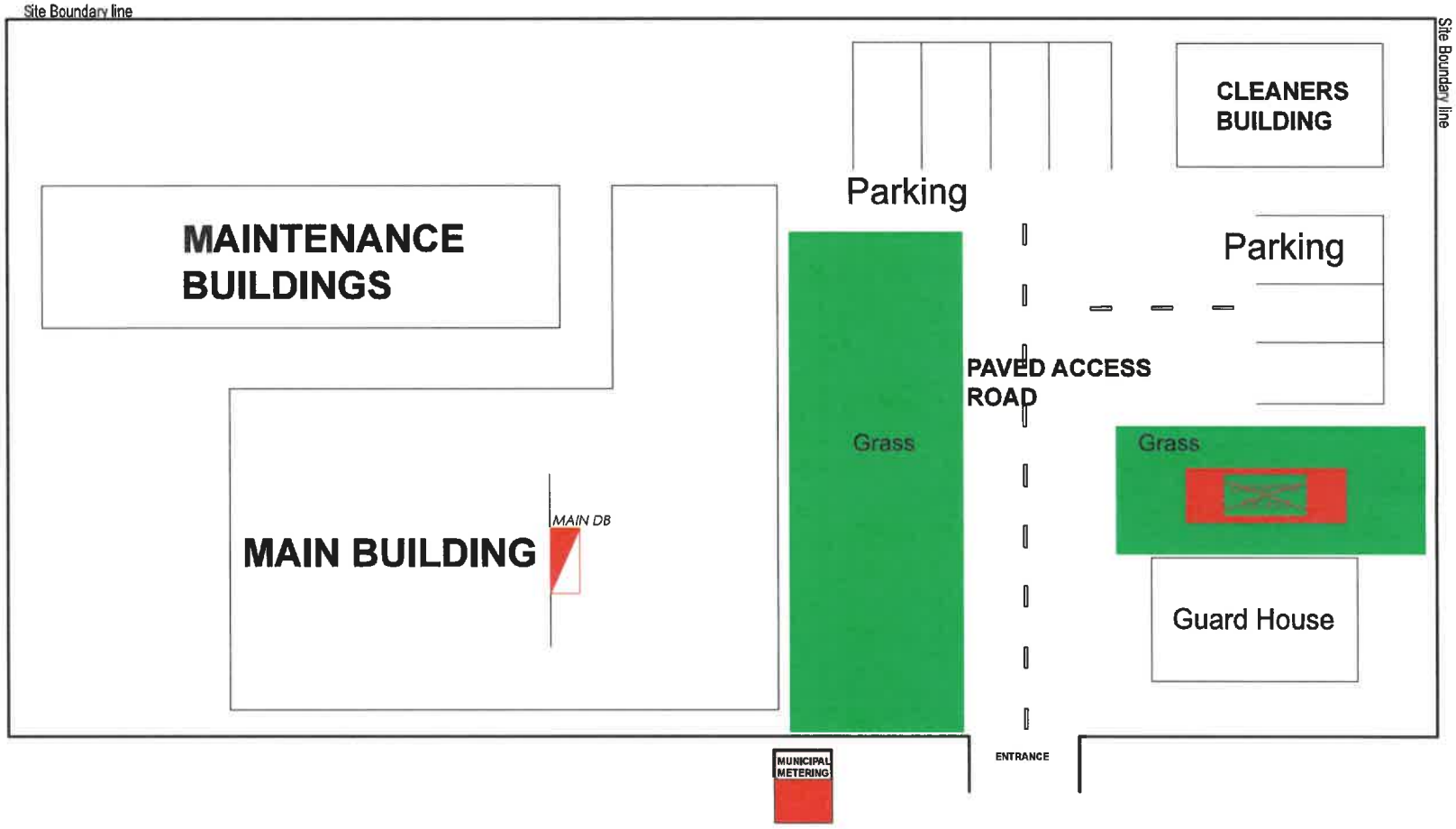

NOTES

REVISIONS

NO.	DESCRIPTION	DATE	BY

LEGEND

SYM	DESCRIPTION
	Main Distribution Board

All Rights Reserved By Department of Public Works & Infrastructure

Full Name: _____

Professional Registration No.: _____

CONSULTANT

IN-HOUSE ELECTRICAL TEAM

CLIENT

DEPARTMENT OF JUSTICE

Description

ARCHITECTURAL

CIVIL & STRUCTURAL ENGINEERING

ELECTRICAL ENGINEERING X

MECHANICAL ENGINEERING

PROJECT TITLE

MBINDA MAGISTRATE COURT

DRAWING TITLE

SITE LAYOUT

CAPITAL	X	MAINTENANCE	
WCS No.	056731	Designed	A.MJOKA
Scale	NTS	Drawn	A.MJOKA
Date	25-07-2023	Checked	R.MAHARAJ
Drawing No.	EE056731-2	Rev No.	A
		Size.	A1

DRAWING ISSUED FOR:

Information	
Preliminary Design	
Detailed Design	X
Tender	
Construction	
As Built	

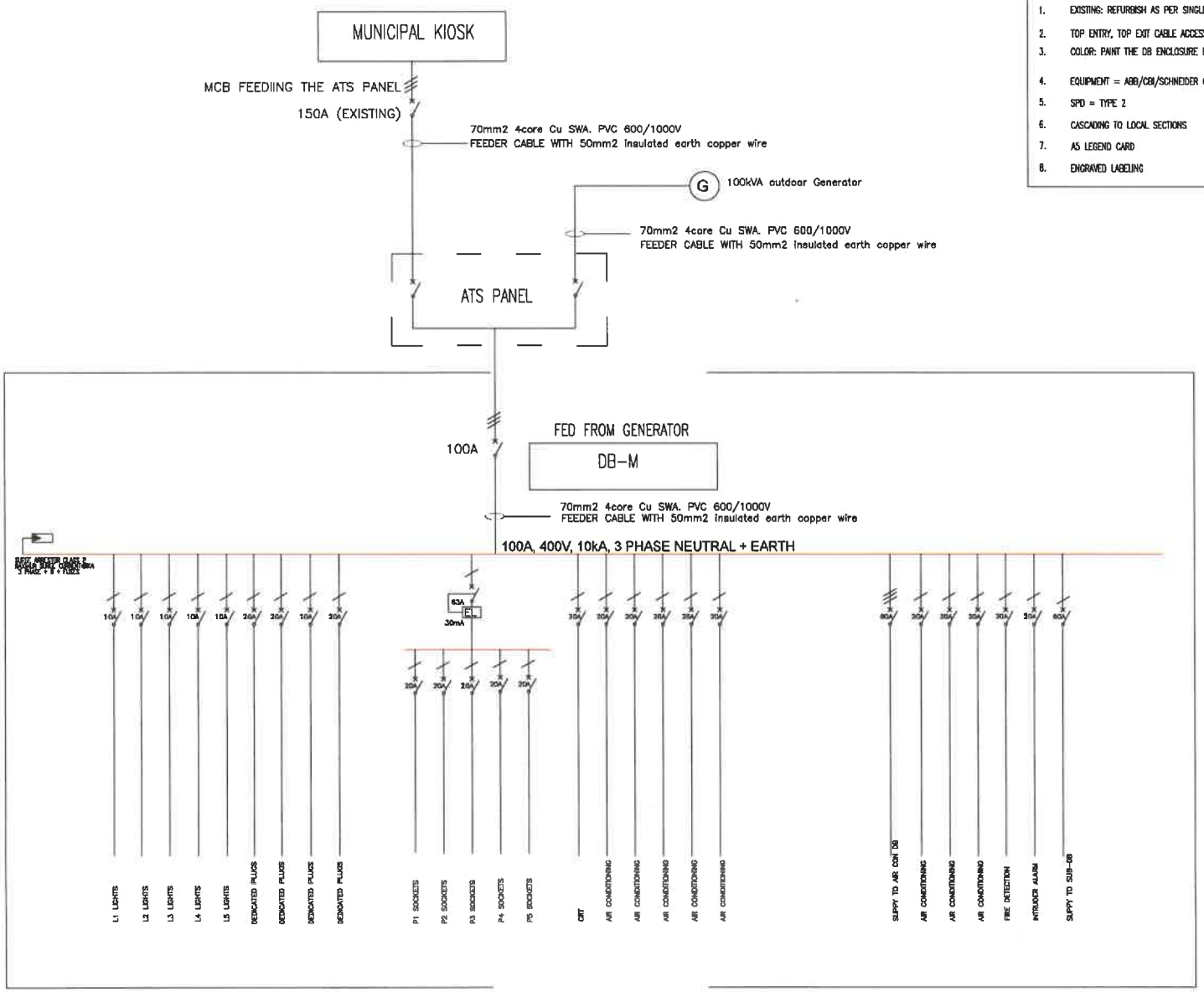

NOTES FOR DB-M(MAIN DB)

1. EXISTING: REFURBISH AS PER SINGLE LINE
2. TOP ENTRY, TOP EXIT CABLE ACCESS
3. COLOR: PAINT THE DB ENCLOSURE RED
4. EQUIPMENT = ABB/CBI/SCHNEIDER OR EQUALLY APPROVED
5. SPD = TYPE 2
6. CASCADING TO LOCAL SECTIONS
7. A5 LEGEND CARD
8. ENGRAVED LABELING

NOTES

REVISIONS

REV	DESCRIPTION	DATE	BY
0	INITIALED DESIGN/SPDS	21 JULY 2023	A.MJOKA

LEGEND

SYM	DESCRIPTION
	ON-LOAD ISOLATOR
	CIRCUIT BREAKER
	SURGE/LIGHTING PROTECTION DEVICE
	EARTH LEAKAGE UNIT
	THREE PHASE
	SINGLE PHASE

All Rights Reserved by Department of Public Works & Infrastructure

Full Name: _____

Professional Registration No.: _____

CONSULTANT

IN-HOUSE ELECTRICAL TEAM

Private Bag 154195 Durban, 4660 South Africa
Tel +27 (0)31 314 7518 Fax +27 (0)31 272 4729

CLIENT

DEPARTMENT OF JUSTICE

Disclaimer

	X

PROJECT TITLE

MSINGA MAGISTRATE COURT

DRAWING TITLE

SINGLE LINE DIAGRAMS

CAPITAL	X	MAINTENANCE	
WCS No.	056731	Designed	A.MJOKA
Scale	NTS	Drawn	A.MJOKA
Date	25-07-2023	Checked	R.MAHARAJ
Drawing No.	EE056731-5	Rev No. A	Size. A1

DRAWING ISSUED FOR:

Information	
Preliminary Design	
Detailed Design	X
Tender	
Construction	
As Built	

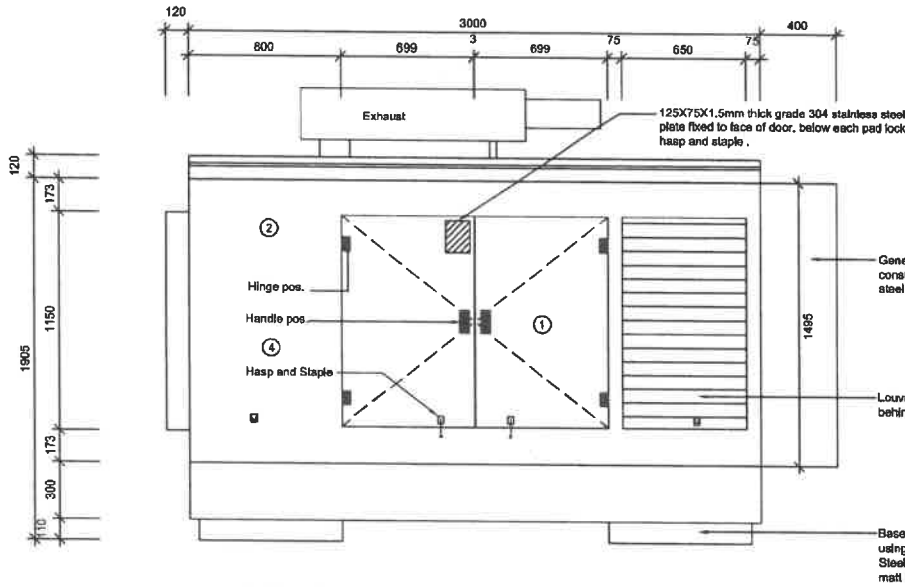

BACK ELEVATION

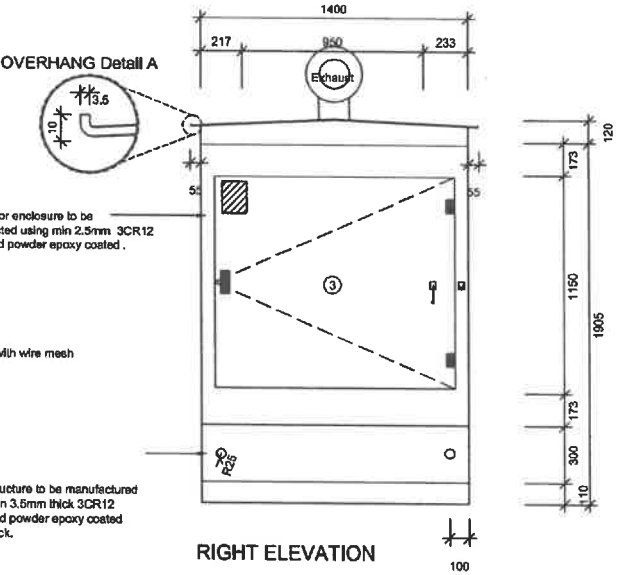

RIGHT ELEVATION

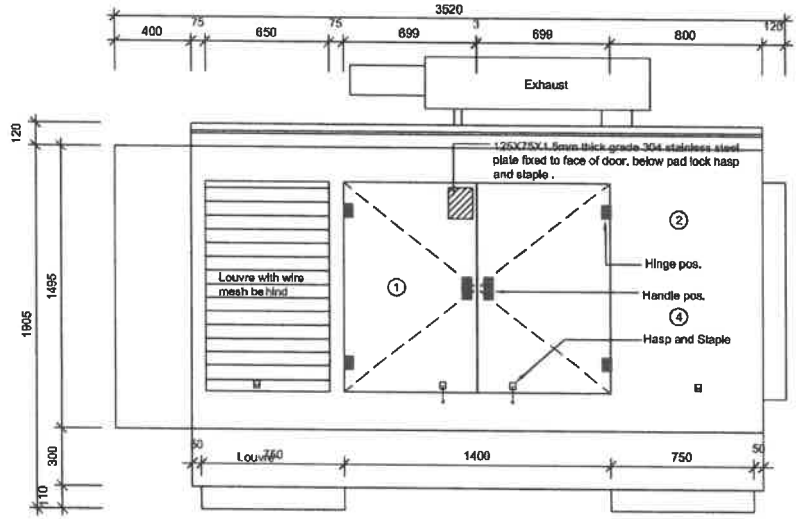

FRONT ELEVATION

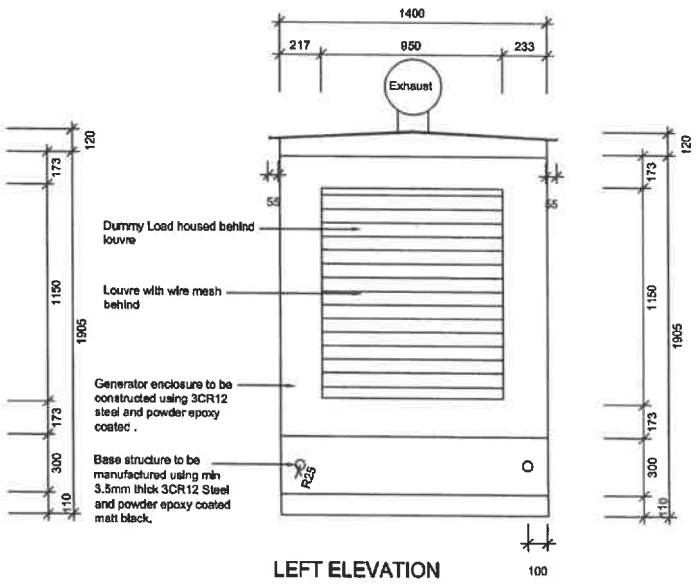

LEFT ELEVATION

No.	DATE	AMENDMENT	D.P.W.
		(1) Danger sign- Automated engine start without notice (2) Electrical Shock Treatment Sign (3) Multilingual Danger sign (4) Electrical Hazzard Sign	

Copyright vests in the Department of Public Works

cad file name

public works
Department:
Public Works
REPUBLIC OF SOUTH AFRICA

DIRECTOR-GENERAL
MR. SIMWE DONGWANA

discipline
ELECTRICAL
service

TYPICAL GENERATOR LAYOUT DRAWING FOR GENERATORS UP TO 200kVA.

(MEASUREMENTS AND SIZE OF CANOPY TO BE ADJUSTED FOR GENERATORS ABOVE 200kVA AS PER SUPPLIER REQUIREMENTS)

WCS number
N/A
drawing title

TYPICAL GENERATOR AND CUBICLE LAYOUT

ref.no.	designed
scale	drawn
date	checked

DPW drawing number

SKETCH 2

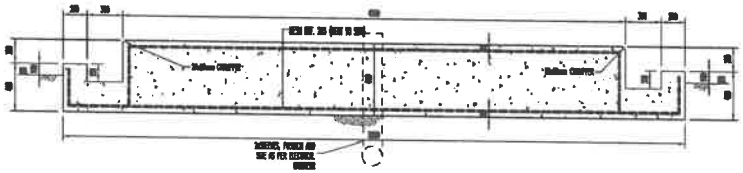

OUTDOOR DIESEL GENERATOR FOUNDATION: SECTION A

Scale 1:20

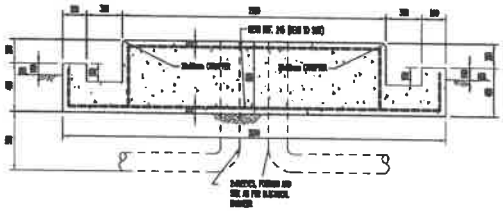

OUTDOOR DIESEL GENERATOR FOUNDATION: SECTION B

Scale 1:20

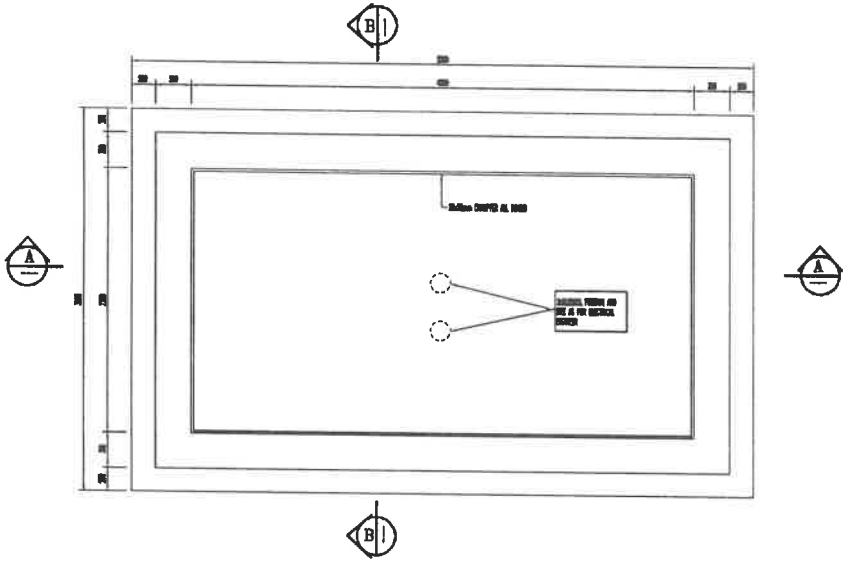

OUTDOOR DIESEL GENERATOR: FOUNDATION PLAN

Scale 1:20

NOTE:

1. 25 Mpa CONCRETE/19mm STONE
2. POLISHED PLASTER FINISH (STEEL FLOAT)
3. EARTHWORKS:-
   -EXCAVATE 450mm DEEP MINIMUM, TO WASTE OR STOCKPILE
   -RIP AND RE-COMPACT INSITU LAYER TO 90% MODAASHTO
   -IMPORT G5 MATERIAL OR USE INSITU TO 150mm LAYERS COMPACTED TO 93% MODAASHTO
4. A TAP TO BE PROVIDED (NOT INDICATED) TO DRAIN ALL THE WATER THAT ACCUMULATES INSIDE THE BUND WALL. FINAL POSITION OF TAP WILL BE DETERMINED ON SITE
5. BUND WALL TO BE PROVIDED SHALL CONTAIN 110% OF THE FUEL, OIL AND WATER CAPACITY OF THE GENERATOR. THE BUND WALL SHALL NOT CONSTRAIN THE CANOPY DOORS FROM OPENING COMPLETELY

No.	DATE	AMENDMENT	D.P.W.
		(1) Danger sign- Automated engine start without notice (2) Electrical Shock Treatment Sign (3) Multilingual Danger sign (4) Electrical Hazzard Sign	

Copyright vests in the Department of Public Works

cad file name

public works

Department:
Public Works
REPUBLIC OF SOUTH AFRICA

DIRECTOR-GENERAL
MR. SIYABONGA DONGWANA

discipline
STRUCTURAL

service

TYPICAL FOUNDATION PLAN FOR A 200kVA DIESEL GENERATOR

(MEASUREMENTS AND SIZE OF FOUNDATION TO BE ADJUSTED FOR GENERATORS ABOVE 200kVA AS PER SUPPLIER REQUIREMENTS)

WCS number
N/A

drawing title
TYPICAL FOUNDATION LAYOUT

ref.no.	designed
scale	drawn
date	checked

DPW drawing number
SKETCH 1

1



4





3

2

ELECTRIC SHOCK TREATMENT

BEFORE ATTEMPTING ANY RESCUE OR ASSISTANCE, ALWAYS ENSURE YOUR OWN SAFETY

- DO NOT TOUCH CASUALTY WITH YOUR BARE HANDS WHILST HE IS IN CONTACT WITH THE LIVE WIRE.
- SWITCH OFF CURRENT IF POSSIBLE.
- INSULATE YOURSELF BY STANDING ON A PIECE OF DRY WOOD OR THICK FOLDED BLANKET OR COAT.
- USING A DRY ROPE, BELT OR STICK MOVE THE WIRE FROM CASUALTY OR DRAG HIM AWAY FROM WIRE.

SEND FOR MEDICAL ASSISTANCE

- DO NOT GIVE STIMULANTS UNLESS ORDERED BY A DOCTOR
- APPLY STERILIZED DRESSING TO BURNS DO NOT REMOVE BURNT CLOTHING AND DO NOT BREAK BLISTERS.
- IF PATIENT IS BREATHING KEEP HIM WARM, COVER WITH BLANKETS OR COATS.
- IF PATIENT IS NOT BREATHING LOOK FOR ANY OBSTRUCTION WHICH MAY BE IN HIS MOUTH

TREATMENT

PERFORM MOUTH TO MOUTH ARTIFICIAL RESPIRATION

A THIN HANDKERCHIEF MAY BE PLACED OVER TIME CASUALTY'S MOUTH OR NOSE IF DESIRED.

A. PLACE THE CASUALTY ON HIS BACK AND SIT OR KNEEL ON THE SIDE OF HIS HEAD. HOLD THE HEAD IN HANDS, ONE PRESSING IT BACKWARDS THE OTHER PUSHING THE LOWER JAW UPWARDS AND FORWARD. THIS IS IMPORTANT TO ENSURE AN UNRESTRICTED PASSAGE TO THE CASUALTY'S LUNGS.

B. PINCH THE CASUALTY'S NOSE CLOSED WITH ONE HAND.

C. TAKE A DEEP BREATH, OPEN YOUR MOUTH WIDE AND SEAL YOUR LIPS AROUND THE CASUALTY'S MOUTH. BLOW AIR STEADILY ON TO THE CASUALTY'S LUNGS UNTIL HIS CHEST RISES.

D. REMOVE YOUR MOUTH AND TURN YOUR FACE TO ONE SIDE TO TAKE ANOTHER BREATH. THE CASUALTY WILL AUTOMATICALLY BREATHE OUT THROUGH HIS MOUTH.

E. SIX BREATHS SHOULD BE GIVEN AS QUICKLY AS POSSIBLE THEN REPEAT THE CYCLE AT 4 SECOND INTERVALS KEEP PATIENTS HEAD PASSED BACK AT ALL TIMES.

No.	DATE	AMENDMENT	D.P.W.
		1 Danger sign- Automated engine start without notice 2 Electrical Shock Treatment Sign 3 Multilingual Danger sign 4 Electrical Hazzard Sign	

Copyright vests in the Department of Public Works

cad file name

public works
Department: Public Works
REPUBLIC OF SOUTH AFRICA

DIRECTOR-GENERAL
MR. SAVIMBI DONGWANA

discipline
ELECTRICAL

service
TYPICAL GENERATOR LAYOUT DRAWING FOR GENERATORS

WCS number
N/A

drawing title
TYPICAL GENERATOR SAFETY SIGNAGE

ref.no.	designed
scale	drawn
date	checked

DPW drawing number
SKETCH 3