SCOPE OF WORK

4.1 SCOPE OF THE DESIRED SOLUTION

The Supply and delivery of:

4.1.1 Turnout components

4.1.2 1:12 turnout sets

4.1.3 1:9 turnout sets

4.1.4 1:7 double slip 48kg/m and 57kg/m.

4.1.5 Single slip 48kg/m and 57kg/m.

4.1.6 Diamond crossing 48kg/m and 57kg/m.

4.1.7 Scissor crossing 48kg/m and 57kg/m.

4.2 DETAILS ON THE PREFERRED SOLUTION

4.2.1. The preferred solution in addressing the corridor recovery challenge is by appointing the service providers to supply material for the rehabilitation of Perway system.

4.3 AREA TARGETED BY THIS PROJECT

4.3.1. The supply will cover the delivery of the required material to the below stated depots and sites. The scope of supply for Perway is to cover the two Gauteng regions' designated locations:

4.3.1.1. Gauteng North – Infrastructure material stores, Rebecca street Depot, Pretoria west

4.3.1.2. Gauteng South – Driehoek material store, corner Branch and Junction road, Germiston

4.3.1.3. Turnouts will be delivered in complete sets at various sections in the Gauteng Region via rail and by road.

4.4 EXTENT AND COVERAGE OF THE PROPOSED PROJECT

4.4.1. The project will cover the Gauteng Region.

4.5 OTHER RELATED PROJECTS

4.5.1. National supply, delivery and handover of 48kg/m and 57 kg/m rails

4.5.2. National supply of Turnouts

4.5.3. National procurement of a Flash butt on-track welding machine

5 SPECIFICATION OF THE WORK OR PRODUCTS OR SERVICES REQUIRED

5.1 TURNOUTS

5.1.1 General

5.1.1.1 The turnouts for the rail types 48/57kg/m and 60E1, to be purchased for the state railway network shall be delivered according to these technical specifications. These technical specifications define the requirements of mechanical turnout parts as well as the functional, material and dimension requirements of sleepers and bearers. The turnouts are:

60-173,6 -1:9 (Single turnout)

60-300-1:12 (Single turnout)

60-904-1:20 (Single turnout)

60-2x1:9-4.8 (Scissors crossover)

SAR48/51-178-1:9 (Single turnout)

SAR48/51-320-1:12 (Single turnout)

DS48/51-190-1:9 (Double slip)

SS48/51-190-1:9 (Single slip)

CR48/51-1:9 (Diamond crossing)

CR60-2x1:9 (Diamond crossing)

SCR48/51-2x1:9-4.8 (Scissors crossover)

5.1.1.2 Technical information

5.2.1.2.1. Gauge: 1065 mm

5.2.1.2.2. Radius: as per layout

5.2.1.2.3. Turnout angle: as per layout

5.2.1.2.4. Rail: UIC 60 E1 or SAR 48

5.2.1.2.5. Rail inclination: 1 : 20 or 1 : 1 : ∞

5.1.1.3 Requirements and definitions of European standard EN 13232, part 1 to 7, Track – Switches and crossings-, must be fulfilled.

5.1.1.4 Turnouts having a radius 190 m or sharper ones are called short turnouts. Other turnouts are called long turnouts.

5.1.1.5 All Turnouts have to be designed with tangential geometry.

5.1.1.6 All Turnout parts shall be designed for static axle load of 26 (+10%) tons. Turnout parts shall be designed for highest permitted speeds as follows:

5.2.1.6.1. Straight track of turnouts: 120 km/h (+10 %, fixed frog)

5.2.1.6.2. Straight track of turnouts 160 km/h (+10 %, movable point frog)

5.2.1.6.3. Deviation radius: 174 m, 1:9 30 km/h (+10%)

5.2.1.6.4. Deviation radius: 300 m, 1:12 40 km/h (+10%)

5.2.1.6.5. Deviation radius: 600 m, 1:20 70 km/h (+10%)

5.2.1.6.6. Deviation radius: 900 m, 1:20 80 km/h (+10%)

5.1.1.7 All turnout parts shall be delivered for the temperature range 0°C to +60°C

5.1.1.8 The life-time of turnouts based on gross tons passing along straight track, for SAR48 and 60E1 turnouts, shall be at least 400 MGT (million gross register tons).

5.1.1.9 The geometry, element lengths and bearer distribution of delivered turnouts, as well

as the location of point machines and other equipment, are described in the track design of the turnout. A list of turnout designs is enclosed to these technical specifications.

5.1.1.10 The track gauge of turnouts is 1065 mm both on straight and side tracks, except for the bent switches of SYM (symmetric) turnouts and DS/ES (inside double or single slip) sharp turnouts less and equal 190 m radius, which have a gauge of 1070 mm.

5.1.1.11 Track gauges must have a manufacturing precision according EN 13 232-1 to EN 13 232-7

5.1.1.12 Turnout parts shall work with concrete sleepers / bearers.

5.1.1.13 The rails of the turnouts are to be installed either with inclination of 1: 20 or without inclination 1: ∞ throughout the turnouts.

5.1.1.14 In case of no inclination at the turnout area, the rail inclination of the adjacent track (1: 20) has to be changed to the rail inclination 1: ∞ at the length of two sleeper spacings. Therefore one turnout bearer has to be equipped with a ril seat presenting an inclination of 1:40.

5.1.2 Layout and Design Process

5.1.2.1 The design of turnouts should be in accordance with EN 13 232-9 specification.

5.1.2.2 At the end of the detailed component design of the Turnout layout, the contractor shall supply all the following information:

5.2.2.2.1. Assembly documents.

5.2.2.2.2. Detailed component plans.

5.2.2.2.3. Parts list for the layout.

5.1.2.3 The content of these documents is described at EN 13232-9, chapter 7.5.

5.1.2.4 Furthermore, the contractor shall deliver the following additional information:

5.2.2.4.1. Maintenance documents;

5.2.2.4.2. Handling documents;

5.2.2.4.3. Detailed component plans;

5.2.2.4.4. Part lists for component plans.

5.1.2.5 The results and all documents required by the above mentioned EN Standard of each design step will be subject of the engineer's approval.

5.1.2.6 The contractor shall submit to the engineer's approval a report indicating the

specifications of the materials for use in switch manufacture, technical drawings and manufacturing project details pertaining to the switch designs. The engineer reserves the right of demanding modifications on the features provided in the said report. In such case, the contractor shall perform the said modifications on the project and resubmit it to the engineer for approval. The Contractor is not entitled to claim whatsoever resulting from such modifications.

5.1.3 Turnout Rails

5.1.3.1 Stock rails and points blades used in turnouts shall be of R 350LHT quality in accordance with European standard EN 13 674 -1 and EN 13 674-2 Switch and crossing rails.

5.1.3.2 In different parts of the standard normal rails, point blades and stock rails are described. Turnouts shall be manufactured of 60E1 or 48/51kg/m rails in accordance with track diagrams and the drawings appended to these technical specifications. However, the cross-section tolerance of 60E1 rail head is ± 0.5 mm.

5.1.3.3 Closure Rails and Rails of the crossing area of 60E1 1:9 turnouts shall be heat treated. The head hardness shall be in the range of 340...390 HB

5.1.3.4 Brinell hardness test method for rails is specified in EN ISO 6506-1.

5.1.3.5 Closure Rails and Rails of the crossing area of longer 60 E1 turnouts and of 48/51 turnouts are not heat treated.

5.1.3.6 60E1A4 rails or alternatively 60E1A1 rails machined to 60E1A4 rails or alternatively 60E1A1 rails machined are used as a blade rail in 60E1 turnouts. 51kg/m rails shall be used as a blade rail in 48/51 turnouts.

5.1.3.7 The delivery must cover the entire rail material of the turnout; closure rails and rails of the crossing area have to be included in the delivery.

5.1.4 Glued Insulated Rail Joints

5.1.4.1 Corresponding to the existing and future signalling systems, the client will decide which turnouts have to be delivered with insulation joints.

5.1.4.2 Insulated joints are included in the delivery with oblique rail cut of 70° and six-bolt assembly, if they are required.

5.1.4.3 The electrical resistance of the insulated joints should be more than 1 MΩ.

5.1.4.4 The shortest insulation distance between the rail ends shall be 6 mm. Insulation joints

shall be placed at the distance of 3.6 meters from rail joints. Insulated joints shall be suitable for CWR track.

5.1.4.5 Mechanical properties:

Both tests must by passed without failure of the adhesively bond area

5.1.4.6 Tensile Test:

Profile 60 E1 min. 2000 kN **5.1.4.7**

Dynamic Fatigue load test:

Maximum load	P_{max} =	200 kN
Minimum load	P_{min} =	15 kN
Baring distance	l =	1000 mm
Frequency	f =	8 Hz
Load changes	Lc =	5 Mio. Cycles

5.1.4.8 Geometrical tolerances:

Vertical tolerances at the running surface: +0.3 mm / - 0.1 mm Horizontal tolerances at the inner running edge: + 0.3 mm / 0 mm

5.1.5 Fastenings

5.1.5.1 The rail fastening system must provide support, guidance, resilience and insulation between the turnout rail material and sleeper and must incorporate modern technological developments for all components.

5.1.5.2 The elastic rail fastening system can be either a direct fastening without a base plate or adapted to ribbed base plate.

5.1.5.3 The fastening system should be simple to install, capable of easy visual inspection and of screwed type.

5.1.5.4 The turnout fastening system have to be in accordance to the “TECHNICAL SPECIFICATION FOR ELASTIC RAIL FASTENING SYSTEMS and the requirements of EN 13 484.

5.1.5.5 Stock rails of switches are fastened on the inside with springs installed inside the slide chairs or by them.

5.1.5.6 The compressive force of a spring shall be12 -14 kN. The head of the stock rail is

allowed to incline outwards by maximum 2.5 mm with the vertical force of 125 kN and the lateral force of 100 kN. The highest portion of the internal fastening shall be a minimum of 10 mm below the bottom surface of the tongue.

5.1.5.7 Stock rails of check rails can be fastened on the inside with springs which are mounted either inside or by the base plates or if there is enough room alternatively normal spring fastenings suitable for ribbed base plates. The compression force to the rail foot shall be 12 - 14 kN.

5.1.6 Turnout Base Plates and Switch Base Plates

5.1.6.1 The delivery shall include all ordinary base plates with fastenings (fastening springs with possible screws, phosphatized nuts, washers, circlips and pads) needed between the front and back joints of a turnout, as well as all special base plates including fastening parts on the turnout area in accordance with the diagram, also in front of the front joint and behind the back joint. If the delivery does not cover the entire turnout, ordinary base plates and their fastenings in the middle rail area are not included in the delivery.

5.1.6.2 Special base plates in the closure rail area (including fastening parts) installed towards the switches are always included in switch deliveries. Special base plates (including fastening parts) installed towards the check rails shall always be included in the check rails deliveries.

5.1.6.3 Base plates which are mounted under obtuse crossings in double or single slips shall always be included in the delivery of switches.

5.1.6.4 Base plates may be roll-formed, forged or cast. The casting material shall be GGG 40.3. Roll-formed plates shall be of grade EN10025-S355J2G3. The diameter of rail screw holes in base plates is 2" 0.5 mm.

5.1.6.5 The bottom surface of base plates shall be horizontal. The rail resting surface of base plates may be a maximum of 1.4 mm concave throughout the width of the resting surface. Convexity is not allowed. The upper and under surfaces of sliding plates shall be parallel and straight.

5.1.6.6 **Switch base plates** shall by maintenance free sliding chairs of low friction and grease free slide chairs that provided consistent drive forces and longevity. 5.1.6.7 Base plates will be delivered installed on sleepers and bearers.

5.1.6.8 Sleeper screws shall have a grade of 5.6. They shall be grooved when hot.

5.1.6.9 Base plates must be in accordance with the UIV leaflet 864-4V -Technical specification for the supply of baseplates or sections for baseplates made of rolled steel, and well the concerned parts of EN 13484.

5.1.7 **Wooden sleepers/ Bearers Screws and Bolts**

5.1.7.1 Wooden sleepers to be laminated and comply with the Manual for Track Maintenance (2000)

5.1.7.2 Wooden turnout sleepers to be supplied as per the specified length.

5.1.7.3 Timber sleepers to be 2.1m, 2.4m, 2.7m, 3.0m, 3.4m, 3.8m, 4.2m in length.

5.1.7.4 Sleepers must be handled with care so that the outer layer of treated wood is not punctured or damaged.

5.1.7.5 Sleeper screws must be in accordance with UIC leaflet 864-1V -Technical specification for the supply of sleeper screws- and 864-2V -Technical specification for the supply of steel track bolts- as well the concerned parts of EN 13484.

5.1.7.6 Screw and bolt material shall have a grade of 5.6 and shall be tempered or hot galvanized.

5.1.8 Pads

5.1.8.1 General requirement

5.1.8.1.1 The pads installed between base plates and rails and Base plate and concrete bearers shall ensure that the elasticity of the turnout construction will be close to the elasticity of the track construction.

5.1.8.1.2 Therefore, the requirements of the “TECHNICAL SPECIFICATION FOR ELASTIC RAIL FASTENING SYSTEMS” and the requirements of EN 13484, must be considered.

5.1.8.1.3 Particularly the static and dynamic stiffness of the employed pads must be in accordance with the above-mentioned technical specification and EN Norm.

5.1.8.2 Pads between base plates and rails

5.1.8.2.1 The resilient pads shall be flexible pads between base plates and rails. They shall

be used on all sleepers and bearers, but not however under the moving parts of tongues and movable crossings, nor at possible movement stop bolts in 60E1 or 48/51 turnouts. Pads shall be manufactured in accordance with category 1 of UIC leaflet 864-5V, 1.1.1986, appendix 2.

5.1.8.2.2 Pads shall have corners that prohibit plates from moving along the length of the turnout.

5.1.8.3 Pads between concrete bearers and base plates

5.1.8.3.1 Insolate pads between concrete bearers and base plates are included in the delivery. Rubber or plastic pads having a thickness of ≤ 4 mm shall be placed between concrete bearers and all steel parts (rails, base plates, end and intermediate reinforcements, fastening plates of point machines and contacts). Pads shall be manufactured in accordance with category 1 of UIC leaflet 864-5V, 1.1.1986, appendix 3.

5.1.9 Switches

5.1.9.1 A switch in a single turnout consists of two blades, two stock rails, their mutual fastening and supporting parts, turnout base plates with rail fastenings under stock rails and blades as well as end and intermediate reinforcements.

5.1.9.2 The design requirements, manufacturing, tolerances and inspection of the switch parts have to be in accordance with EN 13232 and particularly EN 13 235-5 Switches.

5.1.10 Crossings

Crossings shall be designed so that there is as little noise as possible when a wheel passes it.

5.1.10.1 Fixed common crossings

5.1.10.1.1 The design requirements, manufacturing, tolerances and inspection of the switch

parts have to be in accordance with EN 13232 and particularly EN 13 235-6 Fixed common and obtuse crossings and EN 13 235-7 Crossings with movable parts.

5.1.10.1.2 Crossings shall be made of cast manganese steel according to UIC leaflet 866-V, 2nd edition, 01.01.1985. Joint rails of quality R 350 LHT shall be bond welded to the end parts (welded legs).

5.1.10.1.3 Geometrical tolerances of the leg welds:

Vertical tolerances at the running surface: +0.3 mm / - 0.1 mm
Horizontal tolerances at the inner running edge: + 0.3 mm / 0 mm

5.1.10.1.4 The wing rails in short turnouts shall be made elevated in order to optimize wheel movement.

5.1.10.2 Fixed obtuse crossings

5.1.10.2.1 Crossing materials shall be identical to those mentioned in point 7.1. Other rails than end and knee rails of manganese crossings shall be heat treated in areas where wheels pass over. The hardness shall be 360...425 HB. Heat treatment should primarily be fine pearlite treatment. It is possible to use explosion hardening in cast manganese crossings, but it is not a requirement.

5.1.10.2.2 The check rails of crossings shall be elevated 40 mm -1, +/-9 mm.

5.1.10.2.3 All special base plates belonging to the crossing shall be included in the delivery of crossing.

5.1.10.3 Movable crossings

5.1.10.3.1 Crossings shall be made of cast manganese steel according to UIC leaflet 866-V, 2nd edition, dated 01.01.1985.

5.1.10.3.2 Joint rails of quality R 350LHT shall be bond welded to the end parts (welded legs).

5.1.10.3.3 Ends or end parts made of rail profiles or full-profile rails, forged end parts, joint rails welded to their ends that have been machined into rail-form as well as wing rails, are made of R350LHT steel. The movable point crossing can also be made of manganese steel.

5.1.10.3.4 All special base plates belonging to the crossing shall be included in the delivery of crossing.

5.1.10.3.5 The distance between sleepers at point machines is 650 mm.

5.1.11 Check Rails

5.1.11.1 33C1 check rail profile of steel grade R320Cr according to European standard EN 13674-3 “Check Rails” is used as check rails. The upper surface of a check rail shall be 20 mm above the head of the stock rail.

5.1.11.2 Check rail supports shall primarily be forged, but a welded structure is also acceptable.

5.1.12 **Point Locking and Contacts**

5.1.12.1 The turnouts shall have facilities for the use of clamp locking as well as for locks built into an electrically operated point machine. At the time of procurement will be decided whether clamp locking and their rods are included in the delivery. 60E1 turnouts shall have facilities for the electrical control of the position of tongues and movable crossing, at intervals of approximately 4 meters.

5.1.12.2 Clamp locking

5.1.12.2.1 Clamp locking is placed at the sleeper interval of 650 mm, with a free space of minimum 360 mm, together with two possible control rods to be installed at the tongue end.

5.1.12.2.2 The clamp locking shall lock both an open and a closed tongue simultaneously. The turnout is turned at the end of the operating rod. The setting movement of the operating rod shall be 220-240 mm.

5.1.12.2.3 The lock is to be attached to the stock rail with screws.

5.1.12.2.4 The housing of the clamp locking is fastened to the stock rail. The evenness of the gliding surfaces of the clamp locking shall be Rz 42 (Ra 12.5).

5.1.12.2.5 The gliding surfaces are lubricated with grease, which shall solidify at a lower

temperature than -45°C. The gap between the tongue and the stock rail shall be adjustable by 0-5 mm, as well as equipped with a reliable device for locking.

5.1.12.2.6 Asymmetric bushings are used in the tongues of 60E1 turnouts.

5.1.12.2.7 The tongues of 54E1 turnouts have straight bushings, but the joint pin is attached asymmetrically to the tongue. The clamp fastening holes in tongues are Ø 34 H8 mm.

5.1.12.2.8 The lock parts shall be protected so that snow, gravel dust, etc. does not prohibit the lock from functioning. No parts of the lock may protrude lower than 100 mm below the lower surface of the rail.

5.1.12.2.9 The lock shall bear up trailing the switches at 40 km/h in an operating condition.

5.1.12.2.10 The clamp locking shall have an electric insulation so that the operation of rail circuits will not be interfered with.

5.1.13 Concrete Sleepers and Bearers

5.1.13.1 The concrete sleepers for turnouts have to be homologated, manufactures, tested in accordance to the EN 13 230-4 Prestressed bearers for switches and crossings.

5.1.13.2 Sleepers and bearers in each point are installed in right angle direction of the straight track.

5.1.13.3 The basics of design of the concrete bearers are the following:

5.1.13.3.1 Concrete bearers are ordered in lengths matching the track diagram.

5.1.13.3.2 The contractor calculates the locations of screw holes.

5.1.13.3.3 If the turnout requires special geometry, the contractor shall also calculate the lengths of bearers.

5.1.13.3.4 The applied and confirmed fasting system of the turnout.

5.1.13.4 Extent of the required supply of concrete bearers of each turnout if the turnout rail inclination is not continuously 1: 20

5.1.13.5 All bearers of the entire turnout panels

5.1.13.6 Three (3) bearers in front of the turnout with the following rail seat conditions:

5.1.13.6.1 One (1) corresponding with track rail inclination of 1: 20

5.1.13.6.2 One (1) for the transition rail inclination of 1: 40

5.1.13.6.3 One (1) without rail inclination of 1: ∞

5.1.13.7 Three (3) bearers at the end of the straight track of the turnout with the following rail seat conditions:

5.1.13.7.1 One (1) corresponding with track rail inclination of 1: ∞

5.1.13.7.2 One (1) for the transition rail inclination of 1: 40

5.1.13.7.3 One (1) without rail inclination of 1: 20

5.1.13.8 Three (3) bearers at the end of the curved track with the following rail seat conditions:

5.1.13.8.1 One (1) corresponding with track rail inclination of 1:∞

5.1.13.8.2 One (1) for the transition rail inclination of 1: 40

5.1.13.8.3 One (1) without rail inclination of 1: 20

5.1.13.9 All further bearers at the end of the straight and curved track of the turnout, presenting a length less than standard length of the track sleepers.

5.1.13.10 Storing of concrete sleepers and bearers

5.1.13.10.1 When stored concrete bearers shall be supported about 0.5 meters from the end of the bearers or otherwise make sure that bearers won't be bent. Rail screw holes shall be plugged with temporary plastic plugs at the concrete bearer factory.

5.1.13.11 Marking of concrete sleepers

5.1.13.11.1 Factory badge, two last digits of the manufacturing year, manufacturing month and the number of the mold shall be marked on concrete bearers, at the place defined by the drawings. The date of manufacturing shall be stamped or printed at the ends of the bearers. The date marking must be readable for at least two months after delivery.

5.1.13.11.2 The exact installation position of the turnout bearers and sleeper's axis have to be marked by white oil paint at the rail foot of both outer rails.

5.1.14 Protection against Corrosion

5.1.14.1 Machined surfaces, rail resting surfaces of turnout base plates and supporting

surfaces of stock rails as well as counter surfaces of rails and tongues shall be protected with a zinc chromate primer.

5.1.14.2 All screws shall be dipped into oil, but not rail screws to be inserted in plastic bushings.

5.1.14.3 Gliding surfaces shall be greased with approved environmentally friendly grease.

5.1.15 Turnout markings

5.1.15.1 Turnouts and their parts shall be numbered so that right-hand turnouts get even numbers and left-hand turnouts odd numbers. Right-hand turnouts are marked with letter O and left-hand turnouts with letter V.

5.1.15.2 Plate numbers are stamped on the baseplate ribs. Forged parts are forged with the number of the forgery, the forging month, except for concrete casting which has its own rules in point 10.

5.1.15.3 Tongues, end reinforcements, wing rails of crossings and check rails shall have a shield attached to describing the manufacturer=s name, manufacturing year and month, rail profile, crossing relation, turnout number and the receiver. The number, manufacturing year and the name of the manufacturer shall also be stamped on the center part of the end reinforcement, the base of the tongue rail, the upper surface of a wing rail and in the center part of check rails.

5.1.15.4 During the pre-assemblage of the turnouts for the inspection at the factory, all positions for the sleepers and fixations shall be marked with paint at the rail foot base.

5.1.15.5 The stamped area shall be marked with white paint after priming against corrosion.

5.1.16 Package and Transportation

5.1.16.1 The contractor must present the package and loading manual of turnouts and turnout parts prior to the start of the manufacturing process to the design engineer for approval.

5.1.16.2 A part switch (Tongue and Stock rail) is loaded and delivered complete if not otherwise agreed. If a switch is delivered without sleepers, it shall be fastened at the factory to temporary wooden transportation beams prohibiting all sort of damage during handling and transportation. At the factory tongues shall be tightly fastened with steel wires to stock rails.

5.1.16.3 All loose parts shall be packed at the factory in separate transportation boxes for separate turnouts.

5.1.17 Acceptance of turnout components

5.1.17.1 PRASA representative or the inspector authorized by PRASA has always right to do acceptance inspections and must carry out those acceptance tests on the used materials he or she considers necessary.

5.1.17.2 PRASA representative or the inspector authorized by PRASA has always right to visit the manufacturing process at any time.

5.1.17.3 The contractor has the obligation to place personnel free of charge at inspector's disposal, as well as all tools, devices and material they will need in order to carry out the necessary tests and inspections.

5.1.17.4 The tolerances defined in these technical specifications and at the relevant EN 13 232 standards are used at the acceptance of a turnout.

5.1.17.5 The contractor shall produce an inspection report on all main parts of a turnout (switches, crossing and check rails) in accordance with the technical specifications and the relevant parts of the EN 13 232 Standards.

5.1.17.6 The inspection and testing reports and forms shall prepared be the contractor ad approved by the PRASA representative or the inspector authorized by PRASA.

5.1.17.7 The contractor shall prepare an inspection scheme for a whole turnout delivered installed on sleepers, and the scheme shall contain all main dimensions (rail lengths, track gauges, crossing control distances, flange grooves of crossing), and the manufacturing numbers of main parts. Two schemes shall be prepared, one of which is delivered to the PRASA's project manager and the other one to the installation site.

5.1.17.8 Turnouts are inspected assembled at the factory. Switches are inspected assembled with possible clamp locking devices fastened in place.

5.1.17.9 Crossings are inspected assembled on crossing base plates (except for obtuse crossings in crossing turnouts).

5.1.17.10 Check rails are inspected together with stock rails and special base plates with fastenings attached.

5.1.17.11 Heat treated parts are always tested for hardness. Crossings (not cast manganese steel) are tested with a penetrating color.

5.1.17.12 From the manufacturing batch of clamp parts of clamp locking is taken a 10 % sample, which is tested for example with a penetrating colour. From each manufacturing batch of clamps at least one clamp, or one percent sample, is taken for ultra-sonic testing. The clamp is to be tested at the shaft with a normal probe and a 45E angle probe.

5.1.17.13 Acceptance certificates shall be delivered for the used materials such as rails, tongue rails, crossing materials and supporting and intermediate cramps as well as fastening parts such as base plates, compression plates, springs, pads, screws, etc.

5.1.17.14 The acceptance inspection of mass-produced materials is carried out by applying Wald sampling method or some other statistical acceptance method approved by the purchaser.

5.1.17.15 At the end of the testing and acceptance procedures of each turnout the contractor must produce an inspection certificate according EN 10 204, Type 3.1

5.1.18 Warranty

5.1.18.1 The contractor shall give a guarantee of latent defects on raw materials and work, starting at the beginning of the year following the delivery. Tongue rails and rails shall be guaranteed for five years according to UIC leaflet 860-V, 8th edition 1.7.1986, with amendments of 1.9.1988. Small parts (for example fastening devices) shall be guaranteed for five years.

5.1.18.2 The contractor accepts the obligation to replace defects at own cost without delay for any faults due to raw material, work or manufacturing methods.

5.1.19 **Turnout Drawings**

5.1.19.1 Drawings to be used

Drawings to be used are presented as appendices extracted from Manual for Track Maintenance (2000) to these technical specifications.

5.1.19.2 Drawings to be delivered

5.1.19.2.1 Before manufacture is started the contractor shall deliver to the purchaser two sets of complete drawings of the turnout parts he has designed, for inspection and approval. Scales: general layout 1:100, details: 1:50, 1:20 and 1:10, see also chapter two (2) of this specification.

5.1.19.2.2 After the approval the contractor shall deliver the drawings in electronic format (Micro CADAM Release 14/AutoCAD Release 13) and one set of plastic prints for files.

5.2 PRICES

Prices quoted must be in South African currency and fixed for the duration of the contract inclusive of transport to the point of delivery at PRASA Gauteng Region Driehoek material store, Rebecca Material store and PRASA sites between Johannesburg and Daveyton corridor. inclusive of loading and off -loading.

5.3 DISTRIBUTION

Prices tendered shall be the ex-works, loaded onto road trucks and Rail wagons. Transport cost will be borne by the supplier. In a case where rails are transported by rail, PRASA will assist to transport the rails from the contractor’s siding to the point of delivery.

5.4 NEGOTIATION

PRASA reserves the right to negotiate prices and commercial aspects after the closing date of the tender.

5.5 INCREASE OR DECREASE IN COSTS

5.5.1 This is an as and when required basis contract, and no contract price adjustment will be applied to allow for all increases or decreases in production costs of a product, from any cause whatsoever, which may occur after the closing date of the submission of tenders and before the date of completion.

5.5.2 Price shall be firm for the duration of contract.

5.6 EXCHANGE RATE

The contract price payable to the Contractor will not be adjusted for increases and decreases in costs of imported materials, machines and spare parts, due to fluctuations in foreign currency exchange rates after the conclusion of the Contract and for the duration thereof.

5.7 PLACING OF ORDERS AND DELIVERY OF GOODS

5.7.1 The Parties shall meet monthly for the purposes of-

5.7.1.1 Planning

5.7.1.2 Placing of orders and delivery of goods.

5.7.1.3 Amending, revising, updating and finalising the twelve-month forward delivery schedule.

5.7.1.4 To re-plan previous plans where there have been mismatches or discrepancies.

5.7.2 The Supplier shall, on a monthly basis, furnish the Project Manager with a written report on the production of the Goods to be supplied.

5.7.3 PRASA will provide the Supplier, in advance, over the duration of the contract period, with a written document regarding requested deliveries for each product, taking the necessary lead-time into consideration. Such document must be accepted and signed by the Supplier who thereby binds himself to the delivery times therein stated.

5.7.4 Orders for each month will be placed at one instance. Any extraordinary factors surrounding the required goods, lead time, expected delivery date, price in relation to forward cover influences, place of delivery and production capacity, which may

influence price or performance are to be brought to the attention of the Project Manager immediately upon receipt of an order by the Supplier.

5.7.5 Orders shall be placed as follows:

5.7.5.1 Orders will be placed at the Supplier.

5.7.5.2 The Supplier will check the required goods, based on projections, the lead times, expected delivery date and place of delivery and adjust, if necessary and notify the Project Manager of the adjustment.

5.7.5.3 The Supplier shall confirm the order with the Project Manager.

5.7.5.4 The Supplier shall issue an order confirmation, to be handed to the Project Manager, which order confirmation shall be fixed.

5.8 DISPATCHING OF MATERIAL

The Supplier shall do all necessary to acquire transportation for the goods, in the form of "road or rail transport", in order to dispatch such goods to the various places of delivery. Transport of the material will be to the supplier's account. Transportation rates to be included on the tender.

5.9 ACCEPTANCE OF GOODS

5.9.1 Final acceptance of goods is the Project Manager's responsibility (with support from the relevant technical expert) and shall be in the form of a Quality Assurance Final Release Certificate to be issued by the Supplier to the Project Manager on presentation of the goods.

5.9.2 The Project Manager shall inform the Supplier in writing within a reasonable period from date of receipt of the goods if the goods are found to be defective or not strictly in accordance with specifications.

5.9.3 The Supplier shall upon handing over the goods to a cartage agent to transport the goods to the PRASA's sites or transport the good themselves (based on the applicable incoterms), issue a certificate confirming that quantities correspond to the accompanying waybills.

5.10 QUALITY ASSURANCE

5.10.1 The manufacturer/supplier shall be ISO9001 accredited and shall make available its quality plan for the manufacture of all components. These quality plans will be audited by PRASA/Metrorail every six months.

5.10.2 The Supplier shall keep quality assurance records for a period of at least 36 (thirty-six) months from the date of final delivery of the goods in a safe place. These records must be made available to the Project Manager for inspection on his request.

5.11 SUPPLIER'S WARRANTY FOR GOODS

5.11.1 The Supplier hereby warrants that the Goods he or she shall provide to the PRASA in terms of this Agreement are suitable for the purpose for which they are intended, the prices are fair and market related and that it shall adhere to the delivery times as stipulated in the specifications.

5.11.2 If within 18 (eighteen) months after delivery of the goods, or 12 (twelve) months after being placed into service, whichever expires first, any defects, whether patent or latent, are found in the goods due to improper workmanship or defective material, excluding fair wear and tear, rough handling or improper use, such defects will be rectified by the Supplier at no extra cost, upon receiving written notification from the Project Manager of such defects within a reasonable time.

5.12 PERFORMANCE LEVELS

5.12.1 The Supplier shall perform strictly in accordance with the levels required by this Agreement and any other specifications emanating there from and accept the penalties which will be instituted for non - performance.

5.12.2 When goods are delivered late, early delivered, but not in accordance with specification it will be regarded as non-performance. Delivery is deemed to be early if it arrives at the destination more than 4 (four) weeks prior to the expected delivery date, and it is considered late if it arrives at the destination after the delivery date stipulated in the order.

5.12.2.1 The delivery lead time for this project is on a once off basis are outlined.

5.12.3 Should there be non-performance, the Supplier shall inform the Project manager immediately of such an event, stating the reasons and remedial action the Supplier intends taking.

5.13 OTHER SPECIFIC PERFORMANCE REQUIREMENTS

5.13.1 The Supplier shall, provide the Goods in the quantity, on or before the due date determined in accordance with the technical specification, tender specification and written Purchase order issued by PRASA,

5.13.2 All Goods shall be packaged in accordance with the provisions of the technical specification. Where no provisions are made in the technical specification for packaging, the Goods shall be properly packed for long term storage suitable to protect the contents against damage through rough handling and over-storage in transit or whilst in store.

5.13.3 Unless otherwise stated, all containers (including packing cases, boxes, pallets, tins drums and wrappings) supplied by the Supplier shall be considered as nonreturnable, and their cost having been included in the price of the Goods.

5.13.4 The Supplier shall clearly mark the outside of each consignment or package with the Supplier's name and full details of the destination in accordance with the PRASA's order and include a packing note stating the contents thereof.

5.13.5 On despatch of each consignment, send to PRASA at the address for delivery of the Goods, an advice note specifying the means of transport, weight, number or volume as appropriate, the point and date of despatch.

5.13.6 Send to PRASA a detailed priced invoice as soon as is reasonably practical after despatch of the Goods, and state on all communications in the relevant order number and code number (if any).

5.13.7 Goods shall be delivered on working days, between working hours of 08:00 am to 15:00 pm to Driehoek material store, corner, Branch and Junction road, Germiston via road; between.

5.13.8 Should the Supplier have reason to suspect delays in delivery, the Supplier shall advise the Project Manager upon receipt of the purchase order (PO) in writing of any anticipated delays citing reasons therefore and put forward a new anticipated delivery date. PRASA may then extend the delivery date if and as it seems fit. Unless and until the Supplier receives a notification of the new, extended delivery date, there shall be no extension to delivery dates. Should delivery delays lead to cost implications, the supplier will be held liable for the cost incurred.

5.13.9 All Goods supplied shall comply with the requirements of the Scope of Work or shall conform in all respects to the technical and tender specification in Annexure A and B, respectively.

5.13.10 All Goods supplied shall be the subject of the Project Manager's inspection and test at all times before, during or after manufacturing. The Supplier shall furnish without extra charge all reasonable facilities and assistance for the safe and convenient inspection or test required by appointed inspectors. Such inspections may be carried out on the Supplier's premises or at another place as deemed appropriate by inspectors.

5.13.11 If the Supplier fails to supply Goods, materials, workmanship or services in accordance with the provisions of the Contract, the Project Manager may reject any part of the Goods by giving written notice to the Supplier specifying the reason for rejection and whether replacement Goods are required and within what time.

5.13.12 The Supplier warrants that the goods will remain free from defects for a period of three years (unless otherwise stated in the Contract Data) from acceptance of the Goods by the Project Manager.

5.14 PAYMENT CERTIFICATE

5.14.1 On or after the assessment date, the Supervisor and the Supplier will together assess the quantities of the progress on each item in the Bill of Quantities and complete the

Progress Assessment Detail form, where after the Progress Assessment Certificate will be issued.

5.14.2 The Supplier shall then submit a VAT invoice and attach the above Progress Certificate for payment by the Employer.

5.14.3 Supplier to provide the Employer with the necessary details regarding banking details to enable the Employer to make electronic payments.

5.15 PRICING OF THE WORKS

5.15.1 The contractor is required to provide firm prices/ rates for material and labor for the duration of the contract.

5.15.2 The contractor shall make provision for the costs (direct or otherwise) associated with works on, over or adjacent to railway lines. The Contractor is advised to study the requirements of the SPK 7/1 and ensure that all works can be completed in accordance with these requirements.

5.16 PENALTIES

5.16.1 If the Contractor fails to complete the Services within the time a stipulated in this Contract for completion of Services or a part or portion of Services, the Contractor shall be liable to the Employer for an amount calculated at 0.5% of the Contract Price per delayed Day per order, which shall be paid for every day which shall elapse between the time for due completion and completion of the relevant Services. However, the total amount due under this sub-clause shall not exceed the maximum of 10% of the Contract Price.

5.16.2 The imposition of such penalty shall not relieve the Contractor from its obligation to complete Services or from any of the obligations and liabilities under the Contract,

5.16.3 PRASA may set off or deduct from the fees due to the Contractor any penalty amounts due and owing by the Contractor in terms of clause 5.22.1

5.17 LIST OF SPECIFICATIONS THAT FORMS PART OF SCOPE OF WORK

The documents forming the contract are to be taken as complimentary to each other. In case of any discrepancy or inconsistency between contract documents, the order of precedence will be:

SANS 3000-1 to 2,	Railway Safety Management

SABS 1200NB	Railway Sidings (Track work)
EN13674-1	Specification for new Railway Rails or the latest equivalent standard
UIC 860-0, UIC 8610-1	UIC Codes or the latest equivalent standard
EN13848	Railway applications – Track geometry quality standard
EN 13481- Part 1	Performance requirements for fastening systems
EN 13146	Test methods for fastening systems
EN 10089	Hot rolled steels for quenched and tempered springs
EN ISO 6506-1	Brinell hardness test method for rails
CCE 1/57/2	Specification for concrete sleepers to standard dimensions 1065mm gauge track
PWM 2/5	Specification for prestressed concrete sleepers used on 1065mm gauge Railway track
E3303 sheet 1	P2 Concrete sleepers drawing
E3303 sheet 2	F4 Concrete sleepers drawing
E3318 sheet 1	PY Concrete sleepers drawing
E3318 sheet 2	FY Concrete sleepers drawing
Z1153 Sheets 1 & 2	Drawing for normal rolling and straightness tolerances laid down in the EN13674 Specification for new railway rails
ASTM	American (USA) standards
SABS 1083:2013	Ballast specification (latest revision for Railway lines)
S406 (1998)	Transnet specification for supply of ballast stone
EN13674	Specification for new Railway Rails
CP1/1	Exothermic welding portions packaging specification
SABS 1431	Grade 300wa for weldable structural steel
E10	General Specifications for Railway Track work (1996)
Track Manual	Manual for Track Maintenance (2000)
Track Manual	Manual for Track Welding (2007)

5.18 LIST OF ANNEXURES/SHEETS AND APPENDIX

Annexure/Appendix	**Document Name Reference**
Rail profiles	Manual for Track Maintenance (2000)
Turnout drawings	Manual for Track Maintenance (2000)
E3303 sheet 1 & 2	PWM 2/5 specification for prestressed concrete sleepers
E3318 sheet 1 & 2	PWM 2/5 specification for prestressed concrete sleepers
Concrete sleepers Annexure A drawing	PWM 2/5 specification for prestressed concrete sleepers
Alumino -Thermic Welding Tests Appendix A	Manual for Track Welding (2007)
Drawings Z1153 Sheets 1 & 2	Manual for Track Welding (2007)

5.19 EXTRACT FROM MANUAL FOR TRACK MAINTENANCE 2000

ANNEXURE 14
SHEET 1 of 4
AMENDMENT

RAIL PROFILES

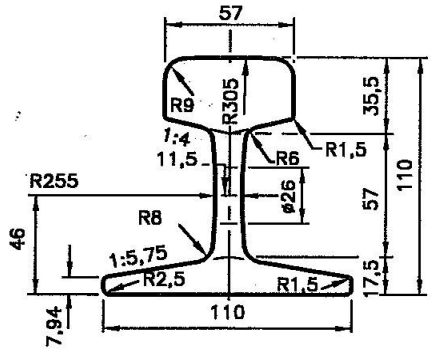

30kg/m

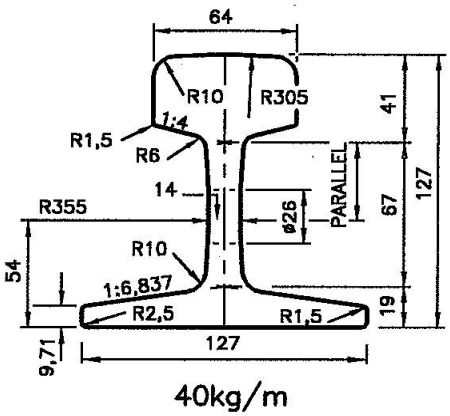

40kg/m

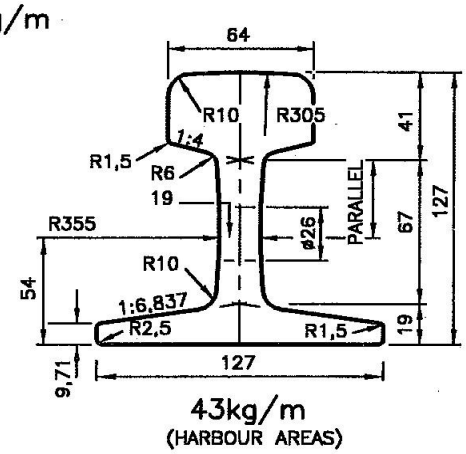

43kg/m
(HARBOUR AREAS)

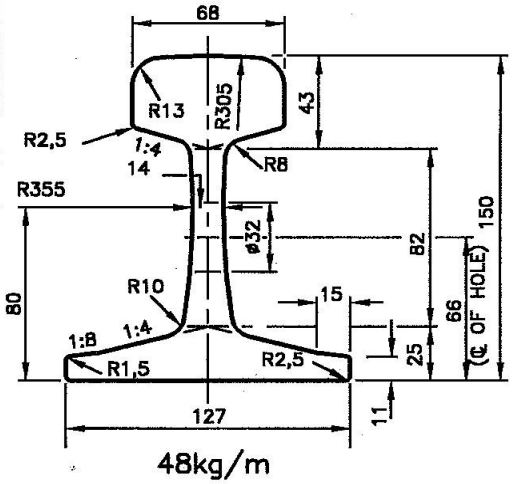

48kg/m

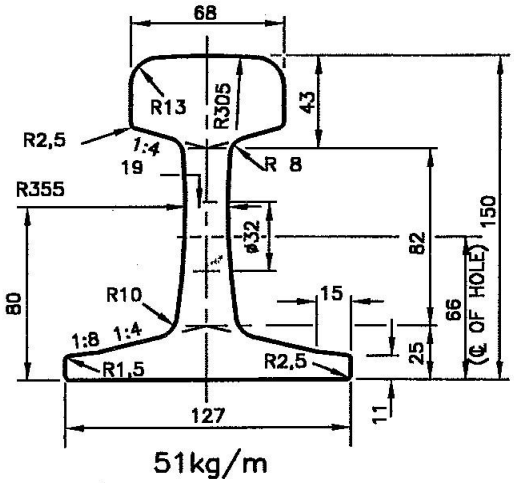

51kg/m
(FLEXIBLE POINTS BLADE
AND UNDERCUT STOCK RAIL)

REMARKS:
1. FOR PROPERTIES SEE ANNEXURE 14 SHT 4.

BE 97–14 Sht 1 of 4 DATE : JUNE 2000

ANNEXURE 14
SHEET 2 of 4
AMENDMENT

RAIL PROFILES

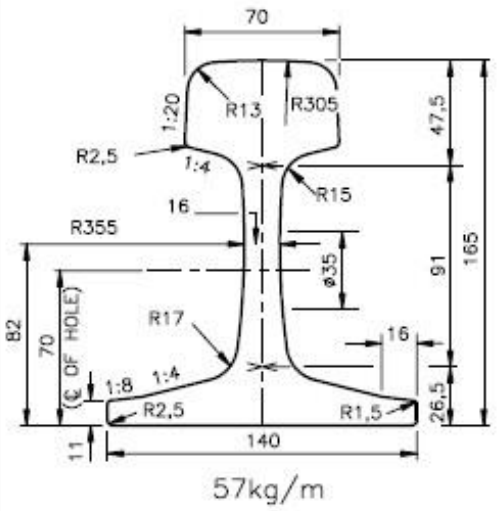

57kg/m

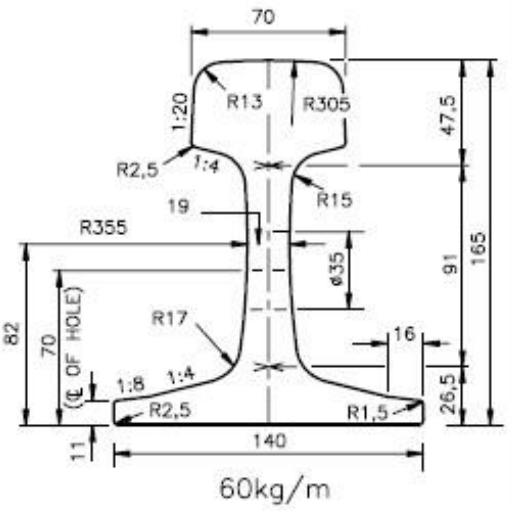

60kg/m

(FLEXIBLE POINTS BLADE AND UNDERCUT STOCK RAIL)

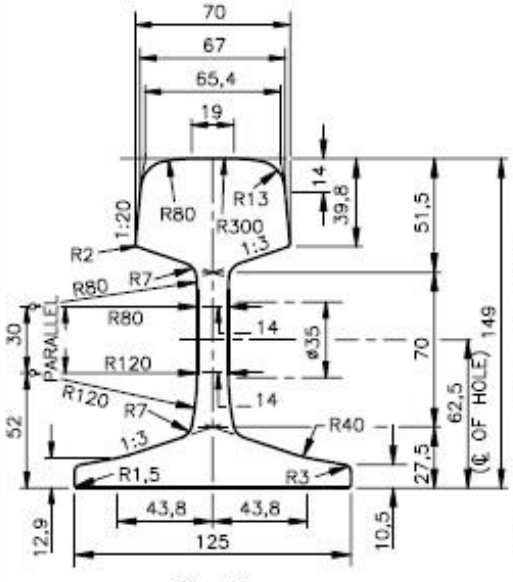

S–49

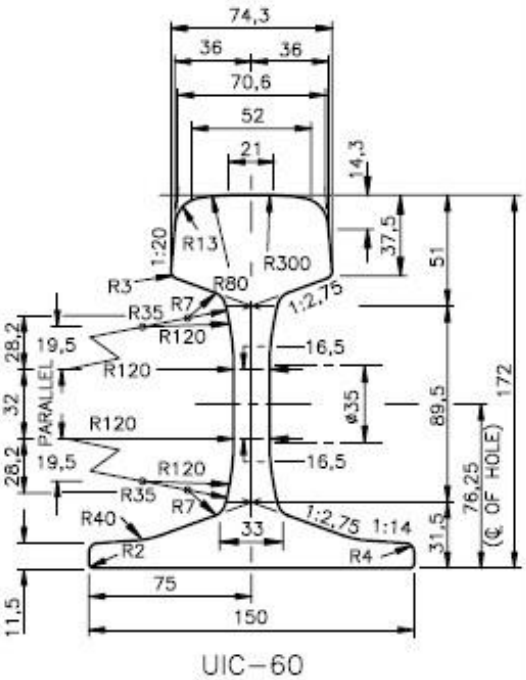

UIC–60

REMARKS:
1. FOR PROPERTIES SEE ANNEXURE 14 SHT 4.

BE 97–14 Sht 2 of 4 DATE : JUNE 2000

6 Is this a CIDB related Project? (Yes / No)

No

If YES, what is the applicable Class of Work & Grade?

Class of Work: N/A

Minimum Grade: N/A

7 PROJECT SPECIFIC TERMS AND CONDITION

7.1 INCREASE OR DECREASE IN COSTS

7.1.1 This is a once-off basis contract, and no contract price adjustment will be applied to allow for all increases or decreases in production costs of a product, from any cause whatsoever, which may occur after the closing date of the submission of tenders and before the date of completion.

7.1.2 Price shall be firm for the duration of contract.

7.2 EXCHANGE RATE

The contract price payable to the Contractor will not be adjusted for increases and decreases in costs of imported materials, machines and spare parts, due to fluctuations in foreign currency exchange rates after the conclusion of the Contract and for the duration thereof.

7.3 ACCEPTANCE OF GOODS

7.3.1 Final acceptance of goods is the Project Manager's responsibility (with support from the relevant technical expert) and shall be in the form of a Quality Assurance Final Release Certificate to be issued by the Supplier to the Project Manager on presentation of the goods.

7.3.2 The Project Manager shall inform the Supplier in writing within a reasonable period from date of receipt of the goods if the goods are found to be defective or not strictly in accordance with specifications.

7.3.3 The Supplier shall upon handing over the goods to a cartage agent to transport the goods to the PRASA's sites or transport the good themselves (based on the applicable incoterms), issue a certificate confirming that quantities correspond to the accompanying waybills.

7.4 QUALITY ASSURANCE

7.4.1 The manufacturer/supplier shall be ISO9001 accredited and shall make available its quality plan for the manufacture of all components. These quality plans will be audited by PRASA/Metrorail every six months.

7.4.2 The Supplier shall keep quality assurance records for a period of at least 36 (thirty-six) months from the date of final delivery of the goods in a safe place. These records must be made available to the Project Manager for inspection on his request.

7.5 SUPPLIER'S WARRANTY FOR GOODS

7.5.1 The Supplier hereby warrants that the Goods he or she shall provide to the PRASA in terms of this Agreement are suitable for the purpose for which they are intended, the prices are fair and market related and that it shall adhere to the delivery times as stipulated in the specifications.

7.5.2 If within 18 (eighteen) months after delivery of the goods, or 12 (twelve) months after being placed into service, whichever expires first, any defects, whether patent or latent, are found in the goods due to improper workmanship or defective material, excluding fair wear and tear, rough handling or improper use, such defects will be rectified by the Supplier at no extra cost, upon receiving written notification from the Project Manager of such defects within a reasonable time.

7.6 PERFORMANCE LEVELS

7.6.1 The Supplier shall perform strictly in accordance with the levels required by this Agreement and any other specifications emanating there from and accept the penalties which will be instituted for non - performance.

7.6.2 When goods are delivered late or early delivered, but not in accordance with specification it will be regarded as non-performance. Delivery is deemed to be early if it arrives at the destination more than 4 (four) weeks prior to the expected delivery date, and it is considered late if it arrives at the destination after the delivery date stipulated in the order.

8 NON-PERFORMANCE

Should there be non-performance, the Supplier shall inform the Project manager immediately of such an event, stating the reasons and remedial action the Supplier intends taking.

9 PRICING SCHEDULE

Prices remain fixed for the duration of the contract.

10 PROJECT SPECIFIC SAFETY-RELATED REGULATIONS

11.1 The contractor shall comply with all safety legislation and regulations in all respects.

11.1.1 this contract requires that the contractor should provide PRASA with a detailed safety plan prior to being issued with a site access certificate, in accordance with the latest version of the Occupational Safety Act, 1993 (Act No: 85 of 1993) and the SPK7, E4E, and National Environmental Management Act 107 of 1997

11.2 All drivers shall be in possession of valid driver's licenses and Public Drivers Permits (PDP) where applicable. Crane operators will be required to have a valid Crane Operator's certificate. All vehicles shall be roadworthy.

11.2 The contractor shall be responsible for all protective clothing and equipment for his employees. All employees required to climb structures shall be issued with suitable harnesses.

11.3 All work shall at all times comply with the E7/1 Specification attached hereto.

11.4 Normal protection measures in accordance with the Protection Manual shall apply.An effective safety procedure to be followed by all personnel on any work site in the case of

approaching rail traffic shall be compiled by the Contractor and implemented before any work commences. This procedure shall be updated whenever the need arises, and any changes shall be communicated to all employees on a worksite before work proceeds.

11 The National Industrial Participation programme

The National Industrial Participation Programme (NIPP), which is applicable to all government procurement contracts that have an imported content, became effective on the 1 September 1996. The NIP policy and guidelines were fully endorsed by Cabinet on 30 April 1997. In terms of the Cabinet decision, all state and parastatal purchases / lease contracts (for goods, works and services) entered into after this date, are subject to the NIP requirements. NIP is obligatory and therefore must be complied with. The Industrial Participation Secretariat (IPS) of the Department of Trade and Industry (DTI) is charged with the responsibility of administering the programme.