THE MSUNDUZI MUNICIPALITY

HEAD: SUPPLY CHAIN MANAGEMENT
DR D. N. GAMBU

333 Church Street, Private Bag X205, Pietermaritzburg, 3200
Telephone No. 033 – 392 2597

SUPPLIES AND SERVICES CONTRACT No. E29 OF 26/27

THE DESIGN, MANUFACTURE, SUPPLY, DELIVERY, OFF-LOADING, ERECTION AND DRY-COMMISSIONING OF HIGH AND MEDIUM VOLTAGE POWER TRANSFORMERS AND ASSOCIATED EQUIPMENT

Tenderer's Name:	
Postal Address:	
Contact Person:	
Telephone No:	
Cellular No:	
E-Mail Address:	
CSD Supplier No:	CIDB CRS No:

Tenders contained in sealed envelopes and marked with **"SUPPLIES AND SERVICES CONTRACT No. E29 OF 2026** and the **Contract Description** must be placed in the Msunduzi Municipality's Central Stores, 2 Abattoir Road (off Kershaw Street), Pietermaritzburg, 3201, not later than **12h00** on **Thursday, 17 December 2026,** when they will be opened in public. **Only Tenders placed in the Tender Box before the closing time above will be accepted.**

THE MSUNDUZI MUNICIPALITY

SUPPLIES AND SERVICES CONTRACT No. E29 OF 26/27

THE DESIGN, MANUFACTURE, SUPPLY, DELIVERY, OFF-LOADING, ERECTION AND DRY-COMMISSIONING OF HIGH AND MEDIUM VOLTAGE POWER TRANSFORMERS AND ASSOCIATED EQUIPMENT

CONTENTS

1. COVER PAGE 0
2. CONTENTS 1
3. TENDER SUBMISSION CHECKLIST 3
4. TENDER NOTICE 3
5. STANDARD CONDITIONS OF TENDER 6
6. LEGISLATION 14
7. DEFINITIONS 17
8. SPECIFICATIONS 18
9. APPENDIX 1 28
10. PRICE SCHEDULE 164

11. **DATA SHEETS 1 – 8**

11.1 INVITATION TO BID DOCUMENT 175
11.2 AUTHORITY TO SIGN DOCUMENT 178
11.3 DECLARATION OF MUNICIPAL FEES 179
11.4 DECLARATION OF INTEREST 180
11.5 BIDDERS PAST SUPPLY CHAIN MANAGEMENT PRACTICES 183
11.6 CERTIFICATE OF INDEPENDENT BID DETERMINATION 185
11.7 DECLARATION FOR PROCUREMENT ABOVE R10 MILLION 188
11.8 TENDER BRIEFING AND SITE INSPECTION CERTIFICATE 190

12. TENDER FORM 191

12. **ANNEXURES "A" – "J"**

13.1 ANNEXURE "A" – ALTERATIONS BY TENDERER 195
13.2 ANNEXURE "B" – PREFERENTIAL PROCUREMENT POLICY ..... .196
13.3 ANNEXURE "C" – POWER TRANSFORMER DELIVERY SCHEDULE ..... .202
13.4 ANNEXURE "D" – KEY PERSONNEL ..... .204
13.5 ANNEXURE "E" – PREVIOUS EXPERIENCE ..... .205
13.6 ANNEXURE "F" – HEALTH AND SAFETY DECLARATION ..... .207
13.7 ANNEXURE "G" – TAX CLEARANCE CERTIFICATE 210
13.8 ANNEXURE "H" – CIPC REGISTRATION CERTIFICATE 211
13.9 ANNEXURE "I" – CSD REGISTRATION REPORT 212
13.10 ANNEXURE "J" – COMPACT DISC (CD) OR USB-FLASH DRIVE 213

14. **TENDERERS PLEASE NOTE:**

14.1 Tenderers are advised to check the number of pages, and should any be missing or duplicated, or the reproduction thereof indistinct, or any descriptions ambiguous, or if this document contains any obvious errors, they shall inform the Head: Supply Chain Management or the Engineer at once and have same rectified. No liability whatsoever will be incurred by the Council in respect of errors in any tender due to the Tenderer's failure to observe this requirement.

14.2 The tender closes at the Tender Box located at the Msunduzi Municipality's Central Stores, 2 Abattoir Road (off Kershaw Street), Pietermaritzburg, 3201, at **12h00 on Thursday, 17 December 2026**.

THE MSUNDUZI MUNICIPALITY

TENDER SUBMISSION CHECKLIST

The Checklist below is attached hereto to assist Service Providers with the completion of the tender document. Service Providers are required to ***TICK*** the relevant boxes for verification purposes. Where information is not applicable to the tender, the symbols ***N/A*** must be inserted in the space provided.

It must be noted that the Council shall not be held liable for any loss or damage incurred to the Service Provider should the Service Provider fail to fulfil the requirements of the Tender.

No.	Description	Service Provider to Tick (√)	For Official Use Only	
1	Has the Tender Document been completed in handwriting or typed and all corrections counter-signed? **(No correction fluid used)**			
2	Has all tendered amounts been arithmetically checked and the correct total amounts carried forward to the Summary Page and Tender Form?			
3	Has all information as required in terms of the Tender Document been submitted with the tender?			
4	Has the compulsory "Tender Briefing/Site Inspection" meeting been attended and has the "Tender Briefing/Site Inspection" certificate been completed and signed at the meeting?		***D***	
5	Have all Declarations contained in the Tender Document been completed and signed by the Tenderer, and before a Commissioner of Oaths (if applicable)?			
6	Has the "Tender Form" been completed and signed?		***D***	
7	Is a valid Tax Clearance Status Verification Pin attached to the Tender Document?			
8	Has the CSD Supplier Number and Unique Registration Reference Number been submitted with the Tender Document?			
9	Does the price includes VAT regardless of VAT status of being a VAT or Non-VAT Vendor. All prices must include VAT.			

****D: Failure to comply with these Sections will prejudice the tender.***

Name of Service Provider : _____

Signature : _____

Date : _____

THE MSUNDUZI MUNICIPALITY

SUPPLIES AND SERVICES CONTRACT No. E29 OF 26/27

THE DESIGN, MANUFACTURE, SUPPLY, DELIVERY, OFF-LOADING, ERECTION AND DRY-COMMISSIONING OF HIGH AND MEDIUM VOLTAGE POWER TRANSFORMERS AND ASSOCIATED EQUIPMENT

TENDER NOTICE

The Msunduzi Municipality hereby invites tenders from suitably qualified and experienced Tenderers for the above works. ***Only Tenderers who have a minimum CIDB Grading of 7 EP or higher will be considered for appointment.***

Tender documents will be made available to tenderers from **12h00 on Tuesday, 17 November 2026.** Tender documents can be downloaded and printed at the Tenderer's cost from the National Treasury e-Tender Publication Portal on **www.etenders.gov.za**.

Printed copies of the tender documents shall also be available from the Supply Chain Management Unit Offices, 5th Floor, A S Chetty Centre, 333 Church Street, Pietermaritzburg, 3201, as from the abovementioned date and time, at a non-refundable tender deposit fee of **R1 380.00 (including VAT)** for each document drawn. Only cash or EFT payments will be accepted.

For any technical related enquiries regarding the Specifications, Tenderers are to contact Lungisani Ntuli (Senior Technologist) on either Contact No.'s 033 392 579 0/082 724 3636 or e-mail lungisani.ntuli@msunduzi.gov.za

For any procurement related enquiries, Tenderers are to contact Vinesh Govender (Supply Chain Management Sub-Unit) on Telephone No. 033 – 392 2027 or e-mail address vinesh.govender@msunduzi.gov.za.

A **compulsory Tender Briefing Meeting** will be held at **10h00 prompt on Wednesday, 2 December 2026**, in the Electricity Department's Boardroom, 111 Havelock Road, Pietermaritzburg, 3201. An official will chair the meeting and answer queries raised by prospective Tenderers. Any amendment to the tender documentation arising from such answers will be circulated in terms of the meeting's attendance register.

Sealed tenders containing the original hand written priced tender document and a digital copy of the same on a CD/USB Flash Drive and endorsed on the envelope with the **"CONTRACT No."** and **"CONTRACT DESCRIPTION"**, must be placed in the Tender Box located at the Central Stores, 2 Abattoir Road, (Off Kershaw Road), Pietermaritzburg, 3201, (Co-ordinates: -29.6126297,30.3610014) not later than **12h00 on Thursday, 17 December 2026**, when they will be publicly opened. Only tenders placed in the Tender Box shall be accepted. Under no circumstances whatsoever will any extension of time be allowed for submission of tenders.

Tender Validity Period: Four (4) months commencing from the closing date of tender.

Tender Evaluation & Adjudication Criteria: The tender shall be evaluated on a Two Stage Evaluation System, Stage One Functionality and Stage Two 90/10 Preference Point System.

Adjudication criteria will be as per the tender document, the allocation of points will be in line with specific goals as prescribed in terms of the Preferential Procurement Regulations, 2022 pertaining to the Preferential Procurement Policy Framework Act No. 5 of 2000.

The Functionality for Stage One shall be evaluated on the following criteria:

No.	Criteria	Max Points Awarded
1	Track record and experience of the Bidder	25
2	Company competencies and capability	40
3	Competency of key staff	15
Total Points Awarded		**80**
Minimum Threshold		**60 Points**

The allocation of Preference Points shall be according to the following Specific Goals:

Specific Goals	Maximum Points Awarded
Black Owned Enterprise	
A "Black Owned Enterprise" with at least 51% South African Black ownership and/or more than 51% management control by South African Black people.	5
Location of Business Enterprise	
This includes any structure or establishment used in conducting a business within the Msunduzi municipality jurisdiction.	5

The Msunduzi Municipality does not bind itself to accept the lowest or any tender and reserves the right to accept the whole or any part of a tender. Each tenderer will be informed of the tender result.

The Msunduzi Municipality expects businesses within the Pietermaritzburg and Midlands Region to support its contract and BEE/SMME initiatives.

S F MNDEBELE (MUNICIPAL MANAGER)

THE MSUNDUZI MUNICIPALITY

STANDARD CONDITIONS OF TENDER

1. DOCUMENTS

This document comprises of the Standard Conditions of Tender, Standard Conditions of Contract (N/A), Special Conditions of Contract (N/A), Legislation, Definitions, Specifications, Pricing Schedule, Tender Form, Drawings (N/A), Data Sheets and Annexures thereto.

2. SUBMISSION OF TENDERS

Tenders must be made out on the Tender Form annexed hereto. Service Providers are advised that this document must be completed by being hand written or typed and submitted in its entirety. Failure to comply with this condition shall result in the tender being disqualified.

Service Providers using Courier Companies or any other mode of transport to deliver their tender documents must ensure that the tender documents are delivered to the Tender Box located at the Msunduzi Municipality's Central Stores, 2 Abattoir Road (off Kershaw Street), Pietermaritzburg, 3201, before the close of tenders. The Council shall not be held liable for any tender document which is not timeously delivered, mislaid or incorrectly delivered due to the negligence of the Courier Company or any other party involved in the delivery of the tender documents, including any employee of the Council.

Sealed tenders endorsed with the appropriate Contract Number and Contract Title must reach the Msunduzi Municipality's Central Stores, 2 Abattoir Road (off Kershaw Street), Pietermaritzburg, 3201, not later than the closing date and time stated in the public advertisement inviting tenders, when they will be opened in public. Tenders shall remain valid for four (4) calendar months from the date of opening, except for the initial five (5) working days grace period after the close of tenders within which period a Service Provider may be permitted to withdraw its tender subject to an application with good and sufficient reasons being submitted in writing to obtain approval of such withdrawal, at the sole discretion of the Head: Supply Chain Management.

All literature submitted must be securely attached to the tender. The Council shall not be held liable for any loss or damages sustained due to the Service Provider's failure to comply with this condition.

In the case of a Service Provider withdrawing its tender after the expiry of the grace period, the Council may refuse to receive or consider, for such period as it may think fit, any further tenders from that Service Provider.

3. COMMUNICATION WITH MEMBERS OF THE COUNCIL OR COUNCIL EMPLOYEES

Without detracting from any prevailing law, no Service Provider shall offer, promise or give any person or persons connected with the adjudication, or awarding of the tender, any gratuity, bonus, discount or consideration of any kind in connection with the obtaining of a contract. Nor shall any Service Provider communicate with any member of the Council or a Council employee on a question affecting the awarding of a contract which is the subject of a tender, during the period between the closing date of tenders and the date of notification of the successful Service Provider; provided always that the Head: Supply Chain Management may, in exceptional circumstances, obtain additional information from a Service Provider to enable her to formulate her recommendation to Council.

Any attempt to contravene this condition, which is brought to the notice of the Head: Supply Chain Management shall result in the disqualification of the Service Provider.

Prospective Service Providers are further advised that s118 of the Municipal Finance Management Act prohibits the interference, by any person, with the Supply Chain Management system of the Municipality and the amendment of or tampering with any tender, quotation, contract or tender after its submission.

4. IMPORT PERMITS

The Council will not undertake to secure any import permits or currency for the import of any goods or materials required for the execution of this contract. The Service Provider must apply directly for any import permits or currency needed. However, the Council will furnish the successful Service Provider with a supporting statement, if required.

5. REGISTRATION WITH THE CENTRAL SUPPLIER DATABASE (CSD)

The National Treasury's Central Supplier Database (CSD) has been open for registration from 01 September 2015. The CSD serves as one single source of supplier information to all spheres of government. Within this system, suppliers are required to register once when they do business with the state. This will significantly reduce the administrative burden for businesses, especially small and medium sized enterprises. The database interfaces with the South African Revenue Service (SARS), the Companies and Intellectual Property Commission (CIPC) and the payroll system. It will electronically verify a supplier's tax status and enable public sector officials doing business with the state to be identified.

All prospective suppliers can register any time on the CSD website **www.csd.gov.za** Prospective suppliers may also visit the Provincial Treasury Database office situated at Treasury House, Ground Floor, 145 Chief Albert Luthuli Road, Pietermaritzburg, from 08h00 to 15h00, Mondays to Fridays, for any assistance with on-line registration on CSD.

For further information or enquiries, please contact 033 – 897 4516 / 033 – 897 4212 / 033 – 897 4624 / 033 – 897 4535 / 033 – 897 4676 / 033 – 897 4509 or Toll-Free at 0800 201 049 during office hours or via e-mail at **database@kzntreasury.gov.za**.

With effect from 01 July 2016, the Msunduzi Municipality will not award any tender to a supplier not registered as a prospective supplier on the CSD. Negotiations for the tender award will only be concluded with the qualify Service Provider(s) who is/are registered on the CSD on or after 01 April 2016.

In order for Council to verify your Company's registration with CSD, Service Providers are required to furnish the following information for verification purposes:

CSD Supplier Number	
Unique Registration Reference Number	

6. TAX CLEARANCE CERTIFICATE REQUIREMENTS

It is a condition of tender that the taxes of the successful Service Provider must be in order, or that satisfactory arrangements have been made with the South African Revenue Service (SARS) to meet the Service Provider's tax obligations.

Service Providers shall be required to submit, together with the tender document, a valid Tax Clearance Certificate and a Tax Compliance Status Verification Pin issued by SARS.

Failure to submit a valid Tax Clearance Certificate and a Tax Compliance Status Verification Pin, the Council reserves the right to verify the same on National Treasury's Central Supplier's Database.

Should the Tax status becomes non-compliant prior to the final award of the contract being made, the Council reserves the right to request the Service Provider to rectify their tax matters.

In this instance, the Service Provider shall be given seven (7) working days written notice in which to comply. Should the Service Provider fail to comply with this request, the Council further reserves the right to make no award to the Service Provider and the Council shall not be held liable for any loss or damages sustained by the Service Provider.

7. RATES

The prices, rates or percentages quoted in the proposal shall be deemed to include all costs, including but not limited to materials, plant, labour, patent rights and royalties, freight, insurance, customs, railage, delivery, etc, unless the Service Provider states otherwise in the proposal.

- **"Price"** means an amount of money tendered for goods or services and includes all applicable taxes less unconditional discounts.

- **Section 64(1) of the VAT Act states**: Any price charged by a vendor for a taxable supply is deemed to include VAT, whether or not explicitly stated. Thus, even if bidder B's invoice does not explicitly include VAT, the price is considered VAT inclusive.

- **NB**: when submitting this tender bidders are advised that regardless of the VAT status of being a VAT or non VAT vendor the price must include VAT

- Further to the above the price shall be deemed to be VAT inclusive regardless of whether the bidder is the VAT vendor or not.

8. INCOMPLETE TENDERING

Tenders may be rejected if they show any additional, conditional or incomplete offers or irregularities of any kind in either the Tender Form or the Pricing Schedule.

Partial awards ***may*** be made where this is perceived by the Head: Supply Chain Management or the Bid Evaluation Committee. Council reserves the right to take into account the principle of the distribution of works in order to empower SMME's and or Local Suppliers.

Should there be any difference or discrepancy between the prices and particulars contained in the Tender Form and those contained in any covering letter or pricing schedule submitted by the Service Provider, the prices and particulars contained in the Tender Form shall prevail.

9. ACCEPTANCE OF ANY TENDER

9.1 The Council does not bind itself to accept the lowest or any tender and reserves the right to accept the whole or any part of a tender.

9.2 The procedure/s which shall be followed with the acceptance of a tender are as follows:

9.2.1 Where in the tender document, Service Providers are required to submit Works Insurance, Sureties, Public Liability Insurance or any other provisional criteria, a letter of Provisional Acceptance will be sent to the successful Service Provider/s stipulating which amount or rate/s have been accepted and the requirements for the final award.

9.2.2 In this instance, the Service Provider/s shall be required to satisfy the requirements of the Provisional Letter of Acceptance within fourteen (14) days from date of issue of the Provisional Letter of Acceptance.

9.2.3 Should the Service Provider/s, fails to comply with the requirements of such provisional acceptance within the period specified in same or any variation thereto, and the Council elects not to confirm the provisional acceptance of the tender on that ground, the Council may refuse to receive or consider for such period as it may think fit, any further tenders from that/those Service Provider(s).

9.2.4 Once the requirements of the Provisional Letter of Acceptance have been satisfied, a Final Letter of Acceptance will be sent by the Head: Supply Chain Management to the successful Service Provider/s

9.2.5 Prior to the undertaking of any works, the successful Service Provider/s shall be required to enter into a Service Level Agreement (SLA) with the Council to address any post award qualification requirements as per the tender document.

9.2.6 Once the SLA has been concluded, the Tender, Provisional Letter of Acceptance, the Final Letter of Acceptance and the SLA, shall constitute a binding agreement between the Service Provider/s and the Council.

9.2.7 Should the Service Provider/s fail to enter into a contract when called upon to do so, then the Council may refuse to receive or consider for such period as it may think fit, any further tenders from that/those Service Provider/s.

9.3 Where no Insurances, Sureties or any other provisional criteria are required, a Final Letter of Acceptance stipulating which rate/s has been accepted will be sent by the Head: Supply Chain Management to the successful Service Provider/s notifying the Service Provider/s of Council's intent to make an award of the contract.

9.4 Prior to the undertaking of any works, the successful Service Provider/s shall be required to enter into a Service Level Agreement (SLA) with the Council to address any post award qualification requirements as per the tender document.

9.5 Once the SLA has been concluded, the Tender, the Final Letter of Acceptance and the SLA, shall constitute a binding agreement between the Service Provider/s and the Council.

9.6 Should the Service Provider/s fail to enter into a contract when called upon to do so, then the Council may refuse to receive or consider for such period as it may think fit, any further tenders from that/those Service Provider/s.

Unless otherwise stipulated in the covering letter submitted with the tender, the Service Provider shall have waived, renounced and abandoned any conditions printed or written upon any stationery used for the purpose of, or in connection with, the submission of the tender which are in conflict with the Council's Conditions of Tender and the Standard Conditions of Contract.

The Service Provider is warned that any material divergence from the official conditions or specification may render the tender liable to disqualification.

10. DOMICILIUM CITANDI ET EXECUTANDI

For the purpose of the service of all documents and the giving of notice as may be required in terms of this contract, or as a result of any action arising in conjunction with it, the Council chooses City Hall, 169 Chief Albert Luthuli Street (formerly Commercial Road), Pietermaritzburg as its *domicilium citandi et executandi.*

The Service Provider's *domicilium citandi et executandi* shall be whatever street address is given in the Tender Form attached hereto. Either party may, at any time, give one (1) month notice, in writing, of a change of its *domicilium citandi et executandi* provided that such address shall be within the Republic of South Africa.

11. DATA SHEETS

11.1 Service Providers should complete, in full, all the Data Sheets attached to this document. These include, but are not limited to, the following:

- Declaration of Interest (MBD 4);
- Authority to Sign Document;
- Pricing Schedule (MBD 3.1 / 3.2 / 3.3 as applicable);
- Declaration of Bidder's Past Head: Supply Chain Management Practices (MBD 8);
- Certificate of Independent Bid Determination (MBD 9); and
- Any other applicable Data Sheets or forms contained within the tender documentation.

Where Data Sheets and/or any other documentation are required to be commissioned, such documents must be duly stamped and signed by a Commissioner of Oaths, where applicable. Failure to complete and submit the required documentation in its entirety may result in the disqualification of the bid and render the offer non-responsive.

11.2 Completion of Tender Form

It is a compulsory requirement that the Tender Form be fully completed and signed by an authorised representative of the bidder. Failure to comply with this provision will render the bid unresponsive (invalid) and such bids will not be considered for adjudication.

12. PROHIBITION ON AWARDS TO PERSONS IN THE SERVICE OF THE STATE

The Head: Supply Chain Management Municipal Regulations read in conjunction with Msunduzi Head: Supply Chain Management policy states that the Council may not make any award to a person:

(a) Who is in the service of the state;
(b) If that person is not a natural person, of which and director, manager, principal shareholder or stakeholder is a person in the service of the state; or
(c) Who is an advisor or consultant contracted with the municipality or municipal entity.

13. MUNICIPAL FEES

All Service Providers are to sign the Declaration herein declaring that their Municipal Fees are in order, or that proper arrangements have been made with the Council. Service Providers must include the relevant account numbers in the declaration.

14. APPEALS AND/OR OBJECTIONS

Any Service Provider aggrieved by decisions or actions taken by the Municipality must lodge within fourteen (14) calendar days of the date of the decision or action, a written objection or complaint to the Municipal Manager / Senior Manager: Supply Chain Management. The appeal must be submitted in writing with the grounds of appeal within the stipulated fourteen (14) days. No appeal/objection will be entertained should the afore-mentioned condition not be adhered to, and the Municipality shall not be held liable for any loss or damages sustained by the Service Provider due to the Service Provider's failure to adhere to the above condition.

15. PREFERENCE POINTS CLAIMED IN TERMS OF THE PREFERENTIAL PROCUREMENT REGULATIONS 2022

Service Providers claiming preference points shall be required to complete Annexure "B" hereto in its entirety and to fully comply with the General Conditions, Definitions and Directives stated therein.

In terms of Regulation 4(2); 5(2); 6(2) and 7(2) of the Preferential Procurement Regulations, 2022, Preference Points must be awarded for Specific Goals stated in the tender.

Service Providers are required to submit proof or documentation required in terms of this tender to claim points for Specific Goals. Failure to do so shall result in no Preference Points being awarded to the Service Provider and the Council shall not be held liable for any loss or damages in this regard.

16. JOINT VENTURE AGREEMENTS AND CONSORTIUMS

Service Providers intending to tender in the form of Joint Ventures/Consortiums **should submit** the following documentation together with the tender:

(1) Tax Compliance Status Verification Pins issued by SARS of all parties of the Joint Venture/Consortium.

(2) CSD Reports of all parties of the Joint Venture/Consortium.

(3) Signed copies of:

(a) The Declaration of Interest Form,
(b) The Declaration of Bidder's Past Supply Chain Management Practices Form, and
(c) The Certificate of Independent Bid Determination Form.

(4) An undertaking duly signed by all parties of the Joint Venture/Consortium indicating their intention to enter into an agreement for the purposes of this contract.

Further to the above, the name of the Joint Venture/Consortium should appear on the relevant pages of the document.

17. ADJUDICATION CRITERIA

The tender shall be evaluated on a Two Stage Evaluation System – Stage One: Functionality and Stage Two: 90/10 Point System in accordance with the Msunduzi Municipality's Supply Chain Management Policy (incorporating Preferential Procurement) as prescribed in terms of the Preferential Procurement Regulations 2022, pertaining to the Preferential Procurement Policy Framework Act, Act No. 5 of 2000.

18. COMBATIVE TENDERING

The Supply Chain Management Regulations states that Combative tendering practices are unethical and illegal. These include but are not limited to:

(i) Suggestions to fictious lower quotations,
(ii) Reference to non-existent competition,
(iii) Exploiting errors in tenders,
(iv) Soliciting tenders from Service Providers whose names appear on the list of restricted Service Providers/Suppliers/Persons, and
(v) Submission of two tenders by a Service Provider.

Any attempt by a Service Provider to contravene this condition which is brought to the notice of the Municipal Manager or the Head: Supply Chain Management shall result in the disqualification of the tender. The Council further reserves the right to take any other action as it may deem necessary.

19. ALTERATIONS BY TENDERER

If a tenderer wishes to submit alternative proposals for consideration or wishes to change the Conditions of Contract, Specifications, Quantities or Drawings, or to qualify the tender in any way, such changes and/or proposals are to be listed in Annexure "A" hereto, failing which the tender will be deemed to be unqualified.

It must be clearly understood that the Council will be under no obligation to accept any such qualification.

20. COMPULSORY SITE INSPECTION/TENDER BRIEFING MEETING

Where in the tender document reference is made to a compulsory Site Inspection/Tender Briefing Meeting, Service Providers shall be required to attend the meeting prompt on the date and time mentioned in the tender document. Service Providers are to ensure that they complete and sign the Attendance Register circulated at the meeting. Service Providers shall also be required to complete and sign the Site Inspection/Tender Briefing Meeting Certificate attached hereto prior to the commencement of the meeting, and to also ensure that the Site Inspection/Tender Briefing Certificate is duly signed by the authorised official at the end of the meeting.

Only one representative per Company or Consortium will be allowed to attend the above meeting. No person will be allowed to represent more than one Company at the meeting.

An official will Chair the meeting and answer queries raised by prospective Service Providers. Any amendment to the tender documentation arising from such answers will be circulated in terms of the meeting's attendance register.

Tenders will not be considered from Service Providers who do not attend the meeting and whose Site Inspection/Tender Briefing Certificate had not been signed by the authorised official.

THE MSUNDUZI MUNICIPALITY

LEGISLATION

1.0 GENERAL

1.1 Contractors will be deemed by virtue of submitting a tender to have undertaken to be aware of and comply fully for all purposes under this contract with all current legislation and related regulations. The following Acts, as amended from time to time, are listed for the attention of the Contractor, without prejudice and without in any way relieving the Contractor of the obligation to continuously comply with all the laws of South Africa for the entire duration of this contract, the cost of so doing being expressly included in the contract sum. It is the sole duty of the Contractor to ensure that it acquaints itself and complies with all applicable legislation. **The Council shall not be liable in any way whatsoever for any errors or omissions in the legislation listed herein.**

2.0 THE OCCUPATIONAL, HEALTH AND SAFETY ACT (ACT 85 OF 1993) (OHS ACT)

2.1 The OHS Act covers inter alia "any work in connection with –

a) the erection, maintenance, alteration, renovation, repair, demolition or dismantling of an addition to a building;
b) the installation, erection or dismantling of machinery;
c) the construction, maintenance, demolition or dismantling of any bridge, dam, canal, railway, street, runway, sewer or water reticulation system or work on any similar project;
d) the moving of earth, clearing of land or making of an excavation or work on any similar project." (General Administrative Regulations Clause 1).

It is recorded that the subject of this contract falls within the scope of the foregoing work definition, and that the Employer in terms of this contract is the Mandator and that the Contractor is the Mandatory in terms of the OHS Act.

2.2 The OHS Act covers *inter alia* "any work in connection with -

a) the erection, maintenance, alteration, renovation, repair, demolition or dismantling of an addition to a building;
b) the installation, erection or dismantling of machinery;
c) the construction, maintenance, demolition or dismantling of any bridge, dam, canal, railway, street, runway, sewer or water reticulation system or work on any similar project; and
d) the moving of earth, clearing of land or making of an excavation or work on any similar project." (General Administrative Regulations Clause 1).

It is recorded that the subject of this contract falls within the scope of the foregoing work definition, and that the Employer in terms of this contract is the Mandator and that the Contractor is the Mandatory in terms of the OHS Act.

2.3 The arrangements and procedures to ensure compliance by the Mandatory with the provisions of the OHS Act referred to in the Agreement, between the Employer and the Contractor in this contract are:

2.3.1 The Mandatory shall keep a record of all incidents in terms of Clause 10 (1) of the General Administration Regulations (GAR).

2.3.2 The Mandatory shall cause every incident to be investigated in terms of Clause 10 (2) of the GAR.

2.3.3 The Mandatory shall cause all such records to be examined by a Safety Committee in terms of Clause 10 (3) of the GAR.

2.3.4 The Mandatory shall on demand furnish the divisional inspector with such returns as may be required in terms of Clause 14 of the GAR.

2.3.5 The Mandatory shall charge a full-time employee designated in writing by the Mandatory with the duty of supervising the performance of the work (or the Mandatory may personally undertake this duty) in terms of Clause 11 of the General Safety Regulations.

2.3.6 The Mandatory shall, before commencing or carrying out the work, inform the divisional inspector in writing of: -

a) the address of the premises on which such work will be carried out;
b) the nature of such work;
c) the date on which it is expected that such work will be commenced; and
d) the date on which it is expected that such work will be completed.

all in terms of Clause 15c of the GAR

2.3.7 The Mandatory shall comply with all other aspects of the OHS Act relative to the nature of the works and shall scrupulously observe and execute any instruction given by an official inspector with reference thereto.

3.0 THE COMPENSATION FOR OCCUPATIONAL INJURIES AND DISEASES ACT (ACT 130 of 1993) (COID ACT)

3.1 Contractors are required to register as employers in terms of the COID Act.

3.2 Contractors must pay the assessments due in terms of the COID Act relative to their employee records including all sub-contractors and community based labour.

3.3 In this specific contract the Contractor further acknowledges that the Employer shall have the right, without prejudice, to deduct any shortfall in compensation due to any employee of the Contractor (or sub-contractor) from monies due or which may become due to the Contractor, and so effect settlement of the matter.

4.0 THE LABOUR RELATIONS ACT (ACT 66 of 1995) (LR ACT)

4.1 Contractors are required to register as employers in terms of the LR Act.

4.2 Contractors are required to pay all employee and employer contributions to the Unemployment Benefits Fund, other than in respect of casual employees defined as persons who work for less than eight hours in any one week, or in respect of persons who by virtue of lawful reasons are exempt therefrom.

5.0 THE BASIC CONDITIONS OF EMPLOYMENT ACT (ACT 3 of 1983) (BCE ACT)

5.1 Contractors in their capacity as employers are required to comply with the provisions of the BCE Act with special reference to their employees' terms and conditions of employment.

6.0 THE INCOME TAX ACT (ACT 58 of 1962)

6.1 Contractors in their capacity both as business enterprises and employers are obliged to register and comply with the requirements of the Receiver of Revenue.

7.0 THE VALUE ADDED TAX ACT (ACT 89 of 1991)

7.1 Contractors in their capacity as business enterprises are required, if their annual turnover exceeds or is expected to exceed R150 000 by the end of February each year, to register as VAT vendors with the Receiver of Revenue for the purpose of paying, recovering, charging and returning VAT to the State via the Receiver of Revenue.

7.2 It is recorded that the Employer in this contract is registered as a VAT vendor.

8.0 THE ENGINEERING PROFESSION ACT OF SOUTH AFRICA (ACT 114 of 1990)

8.1 Where work undertaken in connection with this contract falls within the meaning of "*kinds of work reserved for professional engineers*" as fully set out in the Engineering Profession Act of South Africa 1990, or any amendments thereof, only persons registered in terms of the above Act, may assume full responsibility, according to competency under the Act, for the respective sections and phases of such work, as described in the Act, particularly in regard to design, supervision of construction and installation, and commission where applicable.

8.2 The Service Provider shall submit a certificate with the tender certifying compliance with all these requirements in connection with the preparation and submission of the tender and shall give an undertaking to comply in full during the contract period. Where applicable the Service Provider shall submit at the time of tendering the name(s), qualifications and address(es) of the Professional Engineer(s) responsible for the various disciplines and portions of the work comprising this contract.

9.0 GENERAL CONDITIONS OF THE CONTRACT

The General Conditions of Contract will form part of this bid documents and may not be amended.

10.0 NON-COMPLIANCE

10.1 The Employer in this contract will not under any circumstances be, or become party to, any act or omission by the Contractor and/or the Contractor's Sub-contractors and/or employees, which contravenes South African law.

10.2 Notwithstanding anything to the contrary in this tender document, and in addition to any other remedies the Council may have, if at any time during this contract, the Council discovers any contravention of the laws expressly mentioned herein or any other applicable law, then the Council shall have the right to cancel this contract forthwith. In such event, the Council shall not be liable for any loss or damages caused by such cancellation.

THE MSUNDUZI MUNICIPALITY

DEFINITIONS

SUPPLIES AND SERVICES CONTRACT No. E29 OF 26/27

THE DESIGN, MANUFACTURE, SUPPLY, DELIVERY, OFF-LOADING, ERECTION AND DRY-COMMISSIONING OF HIGH AND MEDIUM VOLTAGE POWER TRANSFORMERS AND ASSOCIATED EQUIPMENT

The following definitions apply:

"Council/Municipality" means The Msunduzi Municipality.

"Director: Supply Chain Management" means the Head: Supply Chain Management of the day of the Msunduzi Municipality or the Manager's duly appointed Representative.

"Service Provider/Contractor" means the Person, Firm, Service Provider or Company whose tender has been accepted by the Msunduzi Municipality and includes the Service Provider's heirs, executors, administrators, trustees, judicial managers or liquidators, as the case may be, but not, except with the written consent of the Council, any assignee of the Service Provider.

"Special Conditions" means any addition to or departure from or amendment of these Standard Conditions as set out in Annexure "A" hereof.

"Drawings" means the drawings referred to in the Specification and any modification of such drawings approved in writing by the Engineer and such other drawings as may from time to time be furnished or approved in writing by the Engineer.

"Contract Document" means the Conditions of Tender, Scope of Contract, Terms of Reference, these Definitions, Special Conditions (if any), Equipment Specifications, Rates, Percentages and Prices, Tender Form and Annexures thereto. Any amendments to the contract document agreed to by the Council and the Service Provider, Provisional Letter of Acceptance and the Letter of Final Acceptance.

"Goods" means the equipment, plant, vehicles, service or materials to be supplied in accordance with the Contract.

"The Tender" means the written offer made by the Service Provider to the Council.

"Preferential Procurement Policy" means the Preferential Procurement Policy Framework Act, 2000 (Act No 5 of 2000).

"SARS" means the South African Revenue Services.

THE MSUNDUZI MUNICIPALITY

SUPPLIES AND SERVICES CONTRACT No. E29 OF 26/27

THE DESIGN, MANUFACTURE, SUPPLY, DELIVERY, OFF-LOADING, ERECTION AND DRY-COMMISSIONING OF HIGH AND MEDIUM VOLTAGE POWER TRANSFORMERS AND ASSOCIATED EQUIPMENT

SPECIFICATION

1.0 SCOPE OF CONTRACT

1.1 This contract calls for service providers with a CIDB grading of 7EP or higher for the Design, Manufacture, Supply, Delivery, Off-Loading, Erection and Dry Commissioning of High and Medium Voltage Power Transformers and Associated Equipment on an ***"as and when"*** required basis for a three (3) year period commencing from the date of award.

The various sizes and the related equipment are indicated below:

1.2 POWER TRANSFORMERS

Item	Description
1.2.1	45MVA, 132/33kV, Ynyn0, % Impedance:12,16
1.2.2	40MVA, 132/11kV, Ynd1, % Impedance:11,5
1.2.3	40MVA, 132/11kV, Ynyn0, % Impedance:17,36
1.2.4	30MVA, 132/11kV, YnZn1, % Impedance:17,8
1.2.5	30MVA, 132/11kV, Ynyn0, % Impedance: 17,36
1.2.6	30MVA, 132/11kV, Ynd1, % Impedance: 15,8
1.2.7	20MVA, 33/11kV, Dyn1, % Impedance: 9,42
1.2.8	15MVA, 33/11kV, Dyn1, % Impedance: 10,4

1.3 12 kV AND 36 kV NEC/NER/NECRT WITH AUXILIARY TRANSFORMER

1.3.1 Neutral Earthing Resistors (NER)

1.3.2 100kVA, Combined three phase neutral electromagnetic coupler with neutral earthing resistor and auxiliary transformer (NECRT)

1.4 12 kV, 36 kV, and 145 kV SURGE ARRESTORS, BUSHINGS

1.4.1 SURGE ARRESTORS

a) The surge arrestor shall be mounted on the transformer top plate in line with the primary bushings. The design of equipment shall be approved and shall be in accordance with the recommendations of IEC 99.1. The surge arrestors shall be suitable for operation under the conditions specified in the Detail Technical Specification and for rainy conditions.

B) Surge arrestors shall be designed to pass the rated impulse rest discharge current and the low amplitude long time current specified in the Schedules.

The rated voltage of the arrestor shall be the maximum RMS power frequency line to earth voltage at which the arrestor can operate continuously. This voltage shall be as stated in the Schedules.

c) The arrestors shall be of robust construction and shall be designed to facilitate handling, erection and cleaning, and to avoid pockets in which water can collect. The method of assembly of the arrestor shall be such that adequate contact pressure is always maintained between the faces of the series non-linear resistance blocks and the design of the series gaps and voltage grading resistors, when used shall be such that the gap setting cannot be affected by vibration, mechanical shock or change in temperature. All joints shall be made in an approved manner such that the arrestor is hermetically sealed with material which will not deteriorate under any service conditions.

d) There must be indication indicator fitted that will indicate arrestor failure, that is visible from ground level. The set of arrestors installed will be earthed on both sides with 50 x 3 mm copper busbars, and Kwenna back-up conductors, directly to the main earth of the substation.

e) Tests on Surge Arrestors: Routine, Manufacturer's control, and standard acceptance tests in accordance with the latest revision of IEC Publication 99-1 shall be conducted on each arrestor assembly.

f) Tests on Surge Counters: The rated minimum operating current stated in the Schedules shall be passed through the surge counter ten times and operation shall be registered on each occasion. The surge counter shall correctly register and withstand the current waves as specified in BS 2914 Clause 14(c) at twice the rated arrestor current. The peak voltage across the counter during this test shall not exceed the value stated in the Schedules.

2.0 PROJECT CHAMPION

For any technical enquiries, Tenderers are to contact the following Project Champion:

NAME	:	Lungisani Ntuli
DESIGNATION	:	Senior Technologist
TELEPHONE No.	:	033 – 392 5790
CELLULAR No.	:	082 724 3636
E-MAIL	:	lungisani.ntuli@msunduzi.gov.za

3.0 DETAILED SPECIFICATION.

See Appendix 1 hereto.

4.0 CONTRACT PERIOD

The contract period shall be three (3) years commencing from the date of award.

5.0 PLACE OF DELIVERY AND DELIVERY PERIOD

Work will be carried out at various 132/33kV, 132/11kVand 33kV/11kV Primary Substations within the Msunduzi Municipality area of supply and a purchase order will be issued based on the demand.

The delivery period must be stated on the Price Schedule.

6.0 COMPULSORY TENDER BRIEIFING/SITE INSPECTION MEETING

6.1 A **compulsory Tender Briefing Meeting** will be held at **10h00 prompt on Wednesday, 2 December 2026**, in the Electricity Department's Boardroom, 111 Havelock Road, Pietermaritzburg, 3201. An official will chair the meeting and answer queries raised by prospective Tenderers. Any amendment to the tender documentation arising from such answers will be circulated in terms of the meeting's attendance register.

Tenderers are referred to Clause 20 of the Standard Conditions of Tender.

6.2 Progress meetings will be held every month until completion and Progress reports are required.

6.3 SITE MEETINGS

6.3.1 Three (3) officials of the Msunduzi Municipality shall visit the Tenderer's manufacturing or test plant to witness factory acceptance tests (FAT). Tenderer to make provision as indicated below.

6.3.2 The Tenderer should make provision for a rate on the tender for three Msunduzi Municipality officials to witness factory acceptance test. The rate shall include flights, accommodation, travelling and meals per person for the entire duration of the factory acceptance test.

6.3.3 The Msunduzi Municipality reserves the right to inspect the bidder's premises during evaluation and after award of tender.

7.0 INSURANCES

Tenderer must have sufficient insurance to cover any damage that may be incurred during loading, transportation, offloading, installation and commissioning. This insurance should indemnify Msunduzi Municipality from any loss or damage that may be incurred by tenderer during loading, transportation, off-loading installation and commissioning of goods.

8.0 RETENTION AND SURETIES

N/A

9.0 PENALTIES

As per the GCC-2025.

10.0 COMPLIANCE WITH ANY LEGISLATION, BYLAWS, ETC.

All works to be undertaken under this Contract shall be compliant in accordance with and/or governed by: -

- The Income Tax Act, (Act No. 58 of 1962)
- The Value Added Tax (VAT) Act, (Act No. 89 of 1991)
- The Municipal Finance Management Act, (MFMA) (Act No. 53 of 2003)
- The Municipal Supply Chain Management Regulations, 2005
- The Construction Industry Development Board (CIDB) Act, (Act No. 38 of 2000)
- The Occupational Health and Safety (OHS) Act, (Act No. 85 of 1993)
- The Labour Relations Act, (Act No. 66 of 1995)
- The Compensation for Occupational Injuries and Diseases (COID) Act, (Act No.130 of 1993)
- The contract shall be carried out subject to and in conformity with any law, regulation or By-law which is of application thereto and shall be conditional upon any necessary consent required by law being obtained.
- South African National Standards (SANS) and International Electro technical Commission (IEC) Standards applicable to Power Transformers, SANS/IEC 60076

11.0 GUARANTEE/WARRANTY/DEFECTS LIABILITY PERIOD

Guarantee/warranty/defects liability period will be 120 months from date of successful commissioning of the Power Transformer on the Msunduzi Electricity Network.

12.0 DRAWINGS

The successful service provider will be required to supply drawings and design of the purchased Power Transformer for approval before commencing with the manufacturing.

13.0 INSPECTION OF CONTRACTOR'S PREMISES

Council reserves the right to inspect tenderers' premises and equipment at any given time before award and during the contract period.

14.0 PRESENTATION

The successful tenderer will be required to come to Msunduzi Municipality's primary substation to explain the operations and maintenance procedures on Power Transformer after the award.

15.0 ANY OTHER IMPORTANT INFORMATION

15.1 The bid will be awarded to a maximum of three (3) service providers in order of preference per section.

15.2 The successful bidder will be expected to enter into a Service Level Agreement with Msunduzi Municipality after receiving the appointment letter.

15.3 Any amendments to the legal and procedural content of this bid shall be addressed in the SLA and entered into agreement with Msunduzi Municipality and successful bidder(s).

15.4 Factory Acceptance Test for three (3) Msunduzi Municipality personnel must include transport (flight arrangements), meals and accommodation.

15.5 All the equipment delivered must be accompanied with protection wiring diagrams, layout drawings, factory test results, special tools, operating and maintenance manuals.

15.6 All the internal current transformer information will be indicated on the Transformer Nameplate. (UV Protected and Engraved)

15.7 The service provider will train Msunduzi Municipality personnel during the cold commissioning of the transformer(s) for the duration of this contract. For every order received the project will be "Turnkey" up till energization.

15.7 The service provider will submit a Health and Safety Risk Assessment for each site before commencement of installation on sites.

16.0 ESCALATION AND VARIATIONS

16.1 The rates will remain fixed for the first year of the contract and an increase based on SEIFSA indices will apply for the remaining years.

16.2 Contract Price Adjustment formula (CPA) must clearly be stated in the tender submission. All ruling indices used shall be provided and the ruling indices shall be one month prior to tender closing or the most recent available indices. Provisional indices may be used and will be corrected once the final indices have been published.

16.3 Rate of Exchange shall be fixed within 21 days of the date of the Official Order by the provision of forward cover for all imported plant and equipment. The initial ruling rate of exchange shall be the rate on the 28th day prior to tender closing.

17.0 MAINTENANCE PERIOD

17.1 Guarantee/warranty/defects liability period will be 12 months from date of successful commissioning of the Power Transformer on the Msunduzi Electricity Network.

17.2 The tenderer must indicate the cost to perform regular maintenance on Power Transformer per service interval as indicated on the manufacturer's maintenance manual. The tenderer must indicate the cost of the maintenance on the pricing schedule for the respective category on tender.

18.0 MATERIALS

The tenderer must indicate prices for maintenance spares on the price schedule per category. All materials used must be new and must conform to SABS and IEC.

19.0 MANDATORY REQUIREMENTS

No.	Description of Mandatory Requirement	Custodian/Principal of Mandatory Requirement	Documentary proof/Verification Method
1	CIDB	Bidder	A copy of the CIDB grade certificate with a grading of 7EP or higher

2	Proof of test laboratory accreditation	Bidder's production facility	ISO/IEC 17025 accreditation certificate. It confirms the lab is competent to perform electrical tests.
3	Proof that accreditation body is a Mutual Recognition Arrangement (MRA) signatory of International Laboratory Accreditation Cooperation (ILAC)	Bidder	Valid certificate
4	Copies of power transformer routine test certificates	Bidder	Routine test certificates of power transformer greater than or equal to 15MVA, 33/11kV

Note: Failure to comply with any of the mandatory requirements above shall lead to immediate disqualification. The document submitted must be in the name of the bidder's production facility.

20.0 STAGE 1- FUNCTIONALITY

20.1 The Tenderer's experience and technical capacity applicable to the nature of works mentioned herein shall be scored against a 90/10-point system, where the Tenderer with the most experience and technical capacity pertaining to the nature of works mentioned herein shall score a maximum of 80 points. Tenderers shall be scored against the following criteria: -

Table 1 – Functional Evaluation Criteria

Key aspect of criterion	Basis for points allocation	Score	Max Points Awarded	Verification method
Track record and experience of the bidder	Number of successful completed similar projects in supply and installation of power transformers greater or equal to 33/11kV, 15 MVA	**5 Points** per successful completed power transformer (greater or equal to 33/11kV, 15 MVA) supply and installation project up to a maximum of 5 projects.	**25**	Purchase order or award letter and signed completion certificate or reference letter showing value of project with contact details to be included for verification
Company competencies and capability	Manufacturing to be in accordance with IEC 600076, comply with ISO 9001 (Quality Management), ISO 14001(Environmental management), ISO 45001 (Occupational Health & Safety), and	Confirmation that all manufacturing power transformers will be done in accordance with IEC 600076- **(15 Points)**	**40**	Written confirmation that all manufacturing power transformers will be done in accordance with IEC 600076.

	ISO 50001 (Energy management) – ALL OF THE ABOVE MUST BELONG TO THE PRODUCTION FACILITY/SITE	The bidder must submit proof that their manufacturing facility complies to ISO 9001 (Quality management)- **(10 Points)**		Valid copy of ISO 9001 certificate
		The bidder must submit proof that their manufacturing facility complies to ISO 14001 (Environmental management)- **(5 Points)**		Valid copy of ISO 14001 certificate
		ISO 45001 (Occupational Health & Safety- **(5 Points)**		Valid copy of ISO 45001 certificate
		The bidder must submit proof that their manufacturing facility complies to ISO 50001 (Energy management) **(5 Points)**		Valid copy of ISO 50001 certificate
Competency of key staff	Professional ECSA registered Design Engineer with a minimum of 10 years post registration experience	Professional ECSA registered Design Engineer with a minimum of 10 years post registration experience **(10 Points)**	**15**	ECSA Professional Registration Certificate, BSc. or BTech. in Electrical Engineering (Heavy Current or Power) and a detailed CV showing the relevant experience in power transformer design works.
				A copy of electrical trade

	Installation Electrician with a minimum of 10 years' post qualification experience	Installation Electrician with a minimum of 10 years' post qualification experience **(5 Points)**		test certificate to be attached with a detailed CV showing relevant experience in power transformer installation works.
Total No. Of Points Awarded			**80**	

20.2 Only Tenderers who score a minimum of 60 points and above in terms of their experience and technical capacity at this stage shall be considered for further evaluation as indicated in Stage 2 below.

21.0 STAGE 2 – 90/10 PREFERENCE POINT SYSTEM

The Preference Points will be allocated as follows:

Total Price - 90 Points
Specific Goals - 10 Points

ITEM No.	CRITERIA	BASIS OF POINTS ALLOCATION	CLAIMABLE POINTS	VERIFICATION DOCUMENT/S
1.	**Black Owned Enterprise (BOE)**	A "Black Owned Enterprise" with at least 51% South African Black ownership and/or more than 51% management control by South African Black people.	5 Points	Companies and Intellectual Property Commission (CIPC) OR Central Supplier Database (CSD)
2.	**Location of Business Enterprise**	This includes any structure or establishment used in conducting a business within the Msunduzi municipality jurisdiction.	5 Points	Utility Bill OR Lease Agreement Document.
TOTAL PREFERENCE POINTS (SPECIFIC GOALS)			**10 OINTS**	

22.0 RETENTION AND SURETIES

N/A

23.0 CONTRACT TO BE IN CONFORMITY WITH BY-LAWS AND ANY OTHER APPLICABLE LAWS

The contract shall be carried out subject to and in conformity with any law, regulation or By-law which is of application thereto and shall be conditional upon any necessary consent required by law being obtained.

24.0 COUNCIL'S LIABILITY AND INDEMNITY

24.1 The Service Providers hereby indemnifies the Council and its employees and agents against all losses and claims for injuries or damages to any person or property whatsoever which may arise out of the execution of this contract.

24.2 The Council shall not be held liable to the Service Providers for any direct or indirect damages or losses and the Council shall be indemnified and held free against claims arising out of:

24.2.1 any negligent or innocent misrepresentations made by the Council, its employees or agents in respect of any data, information and statistics supplied to the Service Providers prior to or during the contract; provided that this condition shall not deprive the Contractor of any payments lawfully due to the Service Providers in terms of the contract, and

24.2.2 a change in a legislative provision applicable to the contract.

25.0 ASSIGNMENT AND SUBLETTING

Neither the Service Providers nor the Council shall assign or cede the contract or any part thereof or any benefit or interest therein or thereunder without the written consent of the other.

The Service Providers shall not sub-let the whole or any part of this contract without the written consent of the Engineer and such consent, if given, shall not relieve the Service Providers from any liability or obligation under the contract.

26.0 SECRECY OF INFORMATION

Subject to the provisions of the Promotion of Access to Information Act, the information revealed in this tender document is to be classified as confidential.

Accordingly, the Engineer reserves the right to request references and generally examine bona fides and available facilities of any Company of Firm wanting to participate in this contract.

27.0 SEQUESTRATION OR SURRENDER OF SERVICE PROVIDER'S ESTATE

In the event of an order being made for sequestration of the Service Provider's estate, whether provisional or final, or in the event of an application being made for such order, or in the event of the Service Providers making application for the surrender of the Service Provider's estate, or if the Service Providers shall enter into, make or execute any deed of assignment or other composition or arrangement with, or assignment for the benefit of the Service Provider's creditors, or purport to do so, or if the Service Providers, being a Company, shall pass a resolution, or if the Court shall make an order for the liquidation of such company, the Council shall have the right, summarily and without recourse to law, to terminate the contract without payment of any compensation to the Service Providers, and without prejudice to the right of the Council to sue the Service Providers for any damages sustained by it in consequence of one or the other of the afore-mentioned events.

28.0 LAW TO APPLY

The contract shall in all respects be construed in accordance with the law of the Republic of South Africa, and any difference that may arise between the Council and the Service Providers in regard to the contract shall be settled in the Republic of South Africa.

29.0 PATENT RIGHTS

The Service Providers shall pay all royalties and expenses and be liable for all claims in respect of the use of patent rights, trade marks or other protected rights, and shall hold the Council indemnified and harmless against any claims for loss or damage to (including legal expenses) arising therefrom.

APPENDIX 1

THE MSUNDUZI MUNICIPALITY

SUPPLIES AND SERVICES CONTRACT No. E29 OF 26/27

THE DESIGN, MANUFACTURE, SUPPLY, DELIVERY, OFF-LOADING, ERECTION AND DRY-COMMISSIONING OF HIGH AND MEDIUM VOLTAGE POWER TRANSFORMERS AND ASSOCIATED EQUIPMENT

GENERAL TECHNICAL SPECIFICATIONS FOR POWER TRANSFORMERS

1. Scope

This enquiry is to design, manufacture, supply, off-load, erect and dry-commission ONAN/ONAF/OFAF OLTC power transformers of various sizes and voltage levels and associated equipment to Msunduzi Municipality.

2. Normative references

The following standards contain provisions that, through reference in the text, constitute provisions of this specification. All standards are subject to revision, and parties to purchase agreements based on this specification are encouraged to investigate the possibility of applying the most recent editions of the standards listed below.

The requirements of this specification take precedence over the requirements of normative references.

IEC 60034	*Rotating electrical machines.*
IEC 60044-3	*Instrument transformers. — Part 3 Combined transformers.*
IEC 60052	*Recommendations for voltage measurement by means of sphere-gaps (one sphere earthed).*
IEC 60060	*High-voltage test techniques.*
IEC 60076-1	*Power transformers — Part 1 General.*
IEC 60076-2	*Power transformers — Part 2 Temperature rise.*
IEC 60076-3	*Power transformers — Part 3 Insulation levels and dielectric tests.*
IEC 60076-5	*Power transformers — Part 5 Ability to withstand short circuit.*
IEC 60085	*Thermal evaluation and classification of electrical insulation.*
IEC 60137	*Insulating bushings for alternating voltages above 1 000 V.*
IEC 60144	*Degrees of protection of enclosures for low-voltage switchgear and control gear.*
IEC 60156	*Insulating liquids – Determination of the breakdown voltage at power frequency.*
IEC 60185	*Current transformers.*
IEC 60214	*On-load tap-changers.*
IEC-60228	*Conductors of Insulated cables*
IEC 60255	*Electrical Relays – Part 21 Vibration, shock, bump and seismic tests on measuring relays and protection equipment- Section 3 Seismic tests.*
IEC 60270	*Partial discharge measurements.*
IEC 60289	*Reactance coils and neutral grounding transformers*
IEC 60502	*Power cables with extruded insulation and their accessories for rated voltages from 1 kV (Um = 1,2Kv) up to 30 kV (Um = 36 kV)*
IEC 60551	*Determination of transformer and reactor sound levels*

IEC 60840	*Power cables with extruded insulation and their accessories for rated voltages above 30 kV (Um = 36 KV) up to 150 KV (Um = 170 KV) – Test methods and requirements*
IEC 62271-209	*Cable connections for gas-insulated metal-enclosed switchgear for rated voltages of above 52 KV– Fluid filled and extruded insulation cables-Fluid-filled and dry-type cable terminations*
NEMA TR1	*Transformers regulators and reactors.*
BS 142	*Electrical protection relays.*
BS 171	Appendix D, *Power transformers*
BS 775-1	*A.C. contactors for voltages above 1 KV up to and including 12 KV*
BS 1433	*Copper for electrical purposes — rod and bar.*
BS 1706	*Electroplated coatings of zinc & cadmium on iron and steel.*
BS 1872	*Electroplated coatings of tin.*
BS 2562	*Specification for cable boxes for transformers and reactors.*
BS 3382	Parts 1 and 2, *Specification for electroplated coatings and threaded components. — Parts 1and 2 Cadmium on steel components. Zinc on steel components.*
BS 3382	Parts 5 and 6, *Specification for electroplated coatings and threaded components. — Parts 5and 6 Tin on copper and copper alloy (including brass) components. Silver on copper and copper alloy (including brass) components.*
BS 3523	*Granular desiccant silica gel impregnated with cobalt chloride.*
BS 3571	*General recommendations for manual inert gas metal arc welding Part 1: MIG welding of aluminium and aluminium alloys.*
BS 4360	*Specification for weldable structural steels.*
BS 4504	*Circular flanges for pipes valves and fittings (PN designated).*
BS 5135	*Arc welding of carbon and carbon manganese steels.*
BS EN50180	Bushings above 1 KV up to 52 KV and from 250 A to 3.15 Ka for liquid filled transformers
DIN 2576	*Flanges Slip-on type for Brazing or Welding; Nominal pressure 10 max.*
DIN 2631	*Welding neck flanges; nominal pressure 6 (max).*
DIN 46277-1	*Assembly rails*
DIN 46277-2	*Assembly rails*
DIN 46277-3	*Assembly rails*
ISO:9001	*Quality systems — Model for quality assurance in design development production installation servicing.*
NRS 079	*Mineral insulating oils (Uninhibited).*
SABS 064	*The preparation of steel surfaces for coating.*
SABS 0111-1	*Engineering Drawing — Part 1: General principles*
IEC 60617	*Graphical symbols for use in electro technical diagrams*
SANS 121	*Hot dip galvanized coatings on fabricated iron and steel articles — Specifications and test methods (Edition 1.1ISO 1461:1999)*
SANS 1091	*National colour standards for paint.*
SANS 1507	*Electric cables with extruded solid dielectric insulation for fixed installations (300/500 V to1900/3300 V).*

CENELEC HD 629.1 S1 + A1 and VDE 0278-part 629-1 test requirements

3. Definitions and Abbreviations

For the purposes of this specification the definitions in IEC 60076-1 apply.

SANS: South African National Standard

SLA: Services Level Agreement

NER: Neutral Earth Resistor

NECRT: Neutral Earth Compensation Resistance transformer

kV: Kilo Volt

MVA: Mega Volt Ampere

Pt: Power Transformer

Ct: Current Transformer

SOP: Standard Operating Procedures

ECSA: Engineering Council of South Africa

RSA: Republic of South Africa

NERM: Neutral Earth Resistor Monitor

PVC: Polyvinyl Chloride

BS: British Standard

IEC: International Electrotechnical Commission

IP: Degrees of Protection

PCB: Polycarbonate Chlorite Bisphenols

SF6 gas: Sulphur Hexafluoride Gas

DC: Direct current

AC: Alternating Current

RMS: root mean square

A: Ampere

V: Voltage

Ω: Ohm

Pd: Partial discharge

kN/m²: Kilo Newton per square meter

FAT: Factory Acceptance Tests

OLTC: On Load Tap Changer

SCADA: Supervisory Control and Data Acquisition

C.M.R: Continuous Maximum Rating

PCB: Polychlorinated biphenyls.

HGIS : (HV) Hybrid Gas Insulated Switchgear

DSB : Double Side Break

CB : Circuit breaker

CTI : Comparative tracking index

ISO : International Standards Organisation

Approved/approval: Approved by, or the approval of the Engineer or Purchaser/Employer, in writing.

4. Requirements

4.1.1 Design details

4.1.1.1 General Service conditions

This specification gives detailed requirements for transformers for use under the following general conditions:

a) Outdoors;

b) at an altitude above sea level up to 1 800 m;

c) at ambient air temperatures;

i)	maximum	40 ºC
ii)	daily average	35 ºC
iii)	yearly average	25 ºC
iv)	Minimum	-10 ºC

d) the average humidity: 30 % to 95 %;

e) a sinusoidal supply voltage wave shape at 50 Hz;

f) Symmetrical three-phase supply voltages (negative and zero phase sequence voltages less than 2%);

g) the life expectancy at rated conditions shall be at least 35 years; and

h) using modern good engineering practices.

NOTE - Due to higher prevailing ambient temperatures, winding temperature rises and top oil temperature rises shall not exceed 55 ºC and 50 ºC respectively. In this respect, the above temperature limits differ from those specified in IEC 60076.

4.1.2 Ratings and operating conditions

4.1.2.1 Power

The values of rated power specified in schedule A of an enquiry document are the continuous ratings, in MVA, at which each of the windings of the transformer can operate on the principal tapping at a voltage equal to the appropriate nominal system voltage, U_n, without exceeding the temperature rise limits specified in this specification.

These loading capabilities shall be demonstrated by a temperature-rise test carried out in accordance with 5.7.1

4.1.2.2 Current

4.1.2.2.1 Rated current

The rated current shall correspond to the rated power at rated voltage on the principal tap position.

4.1.2.2.2 Maximum continuous current on any tapping

It may be assumed that the transformer will be operated such that the maximum continuous current in any winding on any tapping position will not exceed 1.05 times the rated current on the principal tapping.

4.1.2.2.3 Emergency current

Power transformers shall have overloading capabilities in accordance with IEC 60354. These capabilities shall be verified by type testing at 1.5 pu and 1.3 pu current respectively.

4.1.2.3 Voltage

4.1.2.3.1 Rated voltage on principal tapping

The rated voltage of each winding of the transformer on the principal tapping shall be as specified in schedule A of an enquiry document and, unless otherwise specified, shall correspond to the system nominal voltage, U_n. The system highest voltages (U_m) will be 1.1 U_n.

Maximum continuous voltage on any tapping (Overflux)

Regardless of the actual location of the tappings in the HV winding, the rated voltage of the HV winding on any tapping shall be assumed to be equal to the rated voltage on the MV winding for three winding transformers multiplied by the voltage ratio on that tapping.

On any tapping it may be assumed that the continuous voltages on the busbars to which the various windings of the transformer are connected, will not exceed 1.1 times the rated voltage of the particular winding on that tapping or U_m, whichever is the lower, thus giving rise to a maximum continuous overflux of 0.1 pu.

4.1.2.3.2 Maximum temporary overvoltage

Under switching conditions, the power frequency line voltage may exceed the maximum system voltage (U_m). The transformers shall be designed to withstand the following over voltages without damage.

i) 1.00 U_m for continuous;
ii) 1.05 U_m for 5 min;
iii) 1.25 U_m for 5 s;
iv) 1.5 U_m for 1 s; and
v) 1.7 U_m for 0,25 s.

4.1.2.4 Network frequency

The transformer shall be designed for a rated frequency of 50 Hz ± 2 Hz. The under frequency condition may be sustained for 30 min and the over frequency sustained for 5 min

4.1.2.5 Ability to withstand abnormal electrical conditions/loadings

4.1.2.5.1 Short-circuits

Notwithstanding the overcurrent limits tabulated in IEC 60076-5, the transformer with the standard minimum percentage impedances given in table 1of this specification, shall be capable of withstanding the thermal, mechanical and other effects of the following faults for 2 s duration per fault incident:

a) a three-phase bolted fault on any set of terminals assuming the fault level(s) on the remaining sets of terminals is that given in schedule A of an enquiry document. The expected occurrence of such faults is once every five years; and

b) a line-to-ground fault on any terminal assuming the fault level(s) on the remaining terminals is that given in schedule A of an enquiry document. The earthed neutral of the transformer and at least one more transformer in parallel with an earthed neutral, are the earthed points in the system. The expected average occurrence is once every year

For the purpose of guarantees, design and possible tests; the supply system shall be represented by voltage sources having the appropriate values of maximum system voltages, U_m, connected to the transformer through impedances with values such that the infeed in kA from the voltage sources to a three-phase fault on any of the transformer terminals, is equal to the fault current levels given in schedule A of an

enquiry document. Furthermore, it shall be assumed that the unit will be on the tap position associated with the minimum impedance. For the purpose of calculating the amplitude of the first peak of short-circuit current an X/R ratio >14 shall be used.

The Employer reserves the right to apply a short-circuit test to one transformer of any batch on site or where convenient, before taking over the batch, in order to prove the short-circuit strength of the windings. Such tests will follow the guidelines laid down in IEC 60076-5 and item 5.of this specification.

The Employer reserves the right to obtain all information regarding calculations and the philosophy of dealing with the short-circuit forces. In the absence of such tests the manufacturer shall demonstrate with internationally accepted design calculations that the transformer meets the requirements for short-circuit strength.

4.1.2.5.2 Arc furnace loadings

When specified in schedule 'A' the transformer windings and leads shall be mechanically braced accordingly to the manufacturer's specifications for all additional loadings.

4.1.3 Impedance and tolerances

4.1.3.1 Main power windings

Table 1— Main parameters of transformers

Nominal voltage (KV)		**Ratings**	**Impedance - Minimum**	**Vector group**
HV	**MV**	**MVA**	**(%)**	
132	33	45	12,16	Ynyn0
132	11	40	11,5	Ynd1
132	11	40	17,36	Ynyn0
132	11	30	17,8	YnZn1
132	11	30	17,36	Ynyn0
132	11	30	15,8	Ynd1
33	11	20	9,42	Dyn1
33	11	15	10,4	Dyn1

The minimum impedance on **any** tap shall not be less than that stated in table 1. The leakage impedance of the transformer on any tapping, at 75 ºC and 50 Hz, shall lie within the limits specified in 4.3.2.1.

The permissible range of impedance includes all manufacturing tolerances. All impedances and impedance ranges shall be referred to the nominal impedance of the transformer. Therefore, the impedance on any tapping shall be the impedance in ohms as viewed from the high voltage terminals, expressed as a percentage of M/ U_n^2 where:

U_n is the nominal voltage of the system in KV, and

M is the MVA rating of the HV winding of the transformer.

NOTE - The impedance *Z*, in ohms, on any tapping can be expressed as:

$$Z = V_t/(\sqrt{3}\times I)$$

where:

I is the rated line current in kA, appropriate to the high voltage terminals, for the principal tapping, and

V_t is the phase-to-phase voltage in kV required to circulate this current during a short-circuit test.

Thus the impedance, expressed as a percentage of M/U_n^2, can be expressed as:-

$$Z\% = Z \times (M/U_n^2)\times 100$$

$$= (V_t/U_n)\times 100$$

See section 5 of this specification for “Measurement of impedance”.

4.1.3.2 Impedance

4.1.3.2.1 Standard minimum impedances

Double-wound transformers with On Load Tap Changer shall have an Impedance range of between minimum of 20% and a maximum of 23%.

The actual measured values of impedance, on any tapping position for the above-mentioned transformers, shall lie within the limits obtained from applying to the impedance given above, the following factors:

4.1.3.2.2 Standard tapping ranges to be considered for impedances

i) Double wound transformers that require on-load tap changers shall have a range of +5 % to –15 % of the HV voltage in 16 steps of 1.25 % each.

ii) Impedance shall be that viewed from the HV terminals, expressed as a percentage of V^2/M where *V* = HV system nominal voltage and *M* = transformer rating in MVA, and referred, for all tappings, to the rated (i.e. principal tapping) current and voltage.

4.1.3.3 Fault current limits for windings

HV/MV impedance’s must be selected to suit the symmetrical three-phase design fault current of the MV system. For 40 MVA132/11kV transformers, the symmetrical three-phase fault current of the MV terminals shall not exceed 12.5kA.

4.1.3.4 Zero sequence impedance

Where specified in Schedule A of an enquiry document, the zero sequence impedance of each unit type shall be measured as detailed in section 5. of this specification.

4.1.4 Acoustic noise

The transformer, tap changing equipment and supplementary cooling equipment shall comply with the values stated in table 2 and be verified in accordance with IEC 60551.

The transformer shall be designed to meet the dB, A noise level specified in Schedule A of an enquiry document.

Table 2 — Audible sound levels for Oil-immersed Power Transformers

Average Sound Level, Decibels	ONAF/OFAF – cooling
74	20800
75	25000
76	33333
77	41667
78	50000

NOTE –the sound levels are with the auxiliary cooling equipment in operation.

4.1.5 Clearances in air

When assembled with connections as in service, electrical clearances in air shall be adequate to withstand the assigned impulse withstand test voltages. This shall be demonstrated by the impulse voltage type tests specified in section 5 during the performance of which all relevant fittings shall be in position as for service conditions.

Care shall be taken to ensure that fittings are located so as not to interfere with the external connection to the bushing terminals, and the clearances to such connections shall not be less than the appropriate minimum phase-to-earth clearance given in column 2 of table 3. The minimum vertical working clearances from floor level to live metal shall be as listed in column 3 of table 3.

Table 3 — Electrical clearances in air

System highest voltage U_m (Kv)	Minimum phase to-earth clearance (see note 1) (mm)	Minimum vertical working clearance from ground level to live metal(see note 2) (mm)
12	200	2 700
36	430	2 930
145	1 200	3 700

Notes:

1) Dimension not applicable to standard bushings per se
2) The minimum distance from the transformer base or ground level to the flange base of a bushing (or surge arrester) shall be 2 500 mm.

4.1.6 Physical arrangement

4.1.6.1 Bushings, cooler banks, conservator and maximum dimensions

Unless otherwise specified, the physical arrangement shall be such that:

a) separately mounted cooler banks, if provided, shall be located to allow free withdrawal of the transformer in the direction of the minor axis; and

b) the maximum overall assembled dimensions (excluding surge arresters) shall be as detailed in table 4.

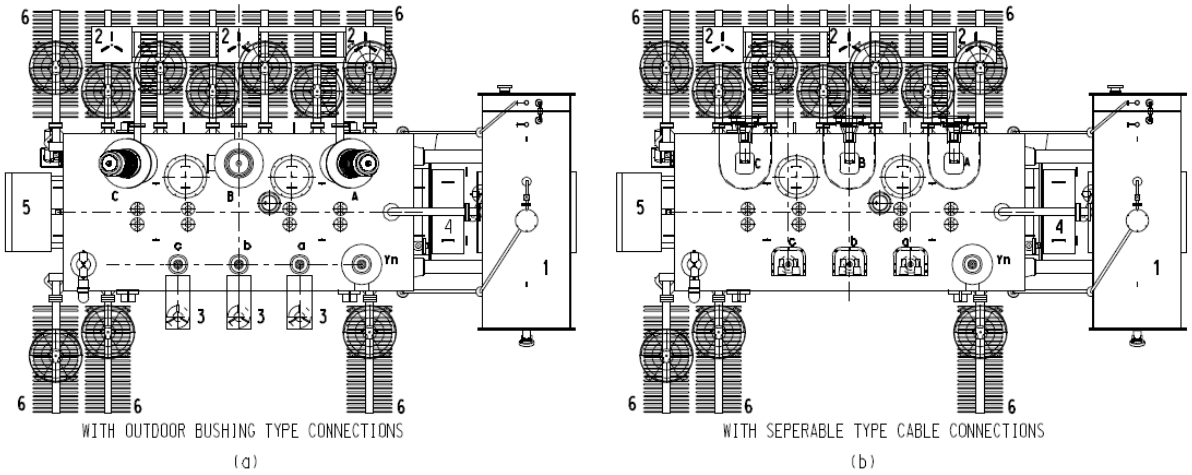

Figure 3- Typical transformer layouts

1. Conservator Tank, 2.HV Surge Arrester Bracket, 3. MV Surge Arrester Bracket, 4. On Load Tap-Changer,
5. Marshalling Kiosk, 6. Radiators

Table 4 — Maximum overall dimensions

HV rating, U_n (KV)	Height (mm)	Length (mm)	Width (mm)
132	5 000	7 600	4 300
33	4 000	6 500	3 400

1) The HV bushings should as far as possible be symmetrically arranged about the overall transverse centre line of the transformer
2) The above dimensions exclude surge arresters and their mounting brackets

4.1.6.2 Surge arrester brackets

HV and MV surge arrester mounting brackets shall be provided when outdoor bushings are specified.

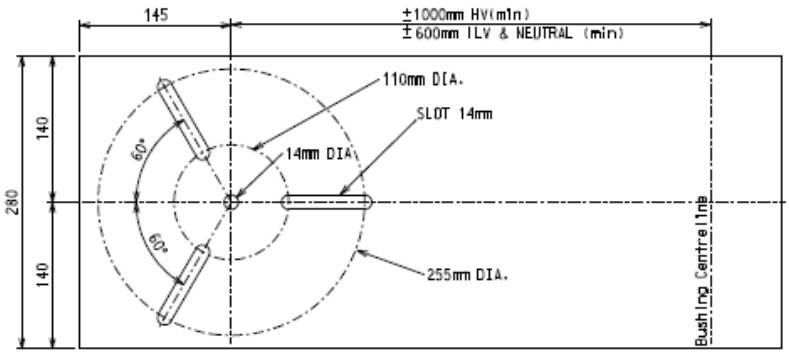

Figure 1- Surge arrester bracket

The outline and dimension drawings provided in terms of a contract, shall show the surge arresters mounted on the transformer with all necessary clearances and sizes dimensioned. Universal surge arrester mounting details, fully dimensioned, shall be shown in an inset on these drawings.

4.1.7 Transformer cores

4.1.7.1 Electrical continuity

Where the core laminations are divided into sections by insulating barriers or cooling ducts parallel to the plane of the laminations, tinned copper bridging strips shall be inserted to maintain electrical continuity between sections.

4.1.7.2 Insulation of the core

The insulation between the core and the clamping structure, including core bolts and/or bands and buckles, shall withstand a test voltage of a.c. 2 KV or d.c. 3 KV for 60 s (see section 5.).

Designs requiring core bolts are not favoured but if used this fact shall be clearly highlighted in the tender documentation and, if accepted, core bolts shall be of non-magnetic material to avoid local hot-spots and class F insulation sleeves shall be used.

4.1.7.3 Earthing

4.1.7.3.1 Core

The core shall be earthed to the core clamping structure at one point only, through a removable external link suitably situated, and protected to allow testing after installation of the transformer.

4.1.7.3.2 Core clamping structure

The bottom core clamping structure shall be in electrical contact with the top core clamping structure through the tie bars, by way of the tank, or by means of a connection placed on the same side and end of the core as the removable core earthing link.

If a copper earthing connection is used between the core clamping structure and the

tank, it shall be flexible, (e.g. laminated, stranded or braided), tinned at the ends, and shall be located on the same side and end of the core clamping structure as the removable core earthing link.

Care shall be taken to ensure that contact resistance between mechanical members that form part of any intentional current paths, be it circulating or to earth, is not detrimentally affected by any painting.

There shall be no sparking, that may upset Dissolved Gas Analysis (DGA) monitoring of the transformer, between bolted mechanical members during inrush or other transient conditions.

A drawing detailing the specifics of the earthing design is required as part of the transformer manuals.

4.1.7.3.3 Cross-sectional area of earthing connections

No core earthing connection shall have a cross-sectional area smaller than 80 mm², with the exception of the connections inserted between laminations which may be reduced to a cross-sectional area of 20 mm², where they are clamped between the laminations.

4.1.7.4 Mechanical construction

4.1.7.4.1 Lock nuts

The core and core clamping structure shall be of adequate strength to withstand, without damage, the stresses to which it may be subjected during handling, transportation, installation and service.

All nuts shall be effectively locked using locking plates, standard machined lock nuts or other approved means. Peining of bolt-ends and/or threads alone or the use of tempered pressed steel nuts will not be acceptable. Nuts and bolts of insulating material shall be fixed by gluing or other approved means.

4.1.7.4.2 Mechanical supports

Where the core and winding assembly is attached to the transformer cover plate, it shall also be supported by the tank bottom. Handholes shall be provided in the attachment to the cover plate, for regulation of the mechanical distances.

Members to support the cover or side walls during vacuum shall be adequate to withstand transport movements without damage.

Special parts for the above functions that are removed after vacuum or transport shall be considered part of the transformer and shall be handed over to the purchaser. Drawings detailing the designs of these parts as well as a description of their use shall be included in the transformer manuals.

4.1.7.4.3 Lifting facilities

Lifting lugs or other means shall be provided for lifting the core and windings and, when lifting, no undue stress shall be imposed on any core bolt or its insulation or on the tank cover plate.

Unless otherwise approved in writing, continuous (no joints) vertical tie rods or plates shall be provided between the top and bottom core clamping structures.

4.1.7.4.4 No-load losses and current

All core, shunts and construction parts shall be designed to withstand the fluxing conditions resulting from the continuous and temporary overvoltage conditions as well as frequency deviations, as specified.

The no-load losses and the no-load current as well as at an agreed overflux condition of each transformer shall be measured as specified in section 5 to demonstrate compliance with this specification.

4.1.8 Windings and connections

The winding arrangement (reference from the transformer core) shall be MV winding, HV winding and Regulating winding.

4.1.8.1 Winding Insulation

The paper used shall be of the thermally upgraded type. The axial spacers for disk windings shall be at least 3mm.

4.1.8.2 Bracing of windings

All winding insulation shall be processed to ensure that there will be no detrimental shrinkage after assembly. Windings shall be provided with clamping arrangements that will distribute the clamping forces evenly over the ends of the winding. Unless otherwise approved, winding clamping arrangements shall permit adjustment of the pressure and the taking up of shrinkage that may occur in service.

The bracing of the windings and connections shall be such that these parts shall safely withstand the cumulative effects of stresses that may occur during handling, transportation, installation and service, including line-to-line and line-to-ground faults.

Full details of the winding clamping arrangements, and their adjustment in or out of the tank, together with relevant drawings and values, shall be submitted for approval and shall form part of the transformer manual.

4.1.8.3 Methods of making winding connections

All connections shall be rounded off to prevent sharp edges

4.1.8.3.1 Soldered and brazed connections

Soft solder shall not be used in making winding connections. If brazed connections are used all traces of acidity shall be eliminated on completion of the process.

4.1.8.3.2 Welded connections and joints in winding body

All welded copper connections shall be made by the metal-inert gas method or other specifically approved method.

This applies particularly to conductor joints in the body of windings. All such joints shall be properly controlled by an approved quality control procedure.

4.1.8.3.3 Bolted connections

The mating faces of bolted connections shall be appropriately finished and prepared for achieving good, long lasting, electrically stable and remakeable contacts. All nuts shall be locked by standard machined lock nuts, or by using approved locking plates.

4.1.8.3.4 Crimped connections and other methods

Connections made by “compression” and “cold-welding” techniques may be used where the particular method has been approved by the purchaser. All lugs for crimping shall be the correct size for the conductors.

4.1.8.4 Winding terminations onto bushings

Winding termination interfaces with bushings shall be designed to allow for repeatable and safe connection under site conditions without jeopardising the in-service integrity of the transformer. The winding-end termination, insulation system and transport fixings shall be so designed that the integrity of the insulation system is not easily compromised during repeated work in this area. Allowances shall be made for accommodating up to 100 mm tolerances on bushing axial dimensions and the fact that bushings may have to be rotated to get oil level inspection gauges to face in a direction that allow easy inspection from ground level. In particular, rotation or straining of insulated connections shall be avoided during the fastening of conductor pads from the winding onto the termination surfaces of the bushing. Suitable inspection and access facilities into the tank shall be provided to minimize the possibility of creating faults during the installation of bushings.

4.1.8.5 Insulation tests, fault and creepage levels

4.1.8.5.1 Surge protection of non-earthed HV neutral of Ynd1-connected transformers

The neutral ends of the HV windings of all Ynd1-connected transformers with partially graded HV winding insulation shall have surge arrester protection in cases where their neutral terminals are not earthed (see note below).

4.1.8.5.2 (a) Surge arrester bracket

The transformer manufacturer shall provide a suitable bracket only for the mounting of the surge arrester which will be supplied and fitted by the manufacturer.

(b) Arrester rating and rating plate

A separate plate shall be attached to the transformer adjacent to the rating and diagram plate.

HV neutral shall be solidly earthed.

4.1.9 Oil for transformer and tap changer

4.1.9.1 Type and quality

Only new napthenic-based oils shall be used.

Where the first filling of virgin oil is to be supplied by the contractor, the oil shall at least be as specified IEC 60296, without any additive. Under no circumstances shall poor quality oil be filled into the transformer and only thereafter be brought up to specification by circulation within the transformer.

4.1.9.2 Dielectric strength

The power frequency dielectric breakdown strength of the oil in any part of the transformer shall meet the transformer manufacturer's requirement, but shall, in any case, not be less than 60 kV/2,5 mm at handover.

Dielectric strength shall be determined in accordance with the method prescribed in IEC 60156.

Table 5 Specifies the insulation levels that apply for the various voltage levels.

System highest Voltage U_m (kVr.m.s)	System nominal Voltage U_n kV r.m.s	System Fault Level (kA)	Lightning impulse withstand voltage level at sea level BIL (kVpeak)		1 Minute power frequency withstand level at sea level at 50 Hz (kV)			Bushings						Tap Changer		
			Line Terminal	Neutral Terminal	Line Terminal(separate source)	Line Terminal(induced)	Neutral Terminal(separate source)	Line		Neutral		Creepage				
								BIL kV_{peak}	1min 50Hz kV_{rms}	BIL kV_{peak}	1min 50Hz (kV_{rms})	Medium (mm) (20mm/ kV)	Very Heavy (mm) 31mm / kV	System nominal Voltage U_n kVr.m.s	BIL (kV peak)	1min 50Hz (kV_{rms})
3.6	3.3	20	45	45	16	6.6	16	200	70	200	70	72	110	3.3	45	16
7.2	6.6	25	75	75	22	13.2	22	200	70	200	70	144	220	6.6	75	22
12	11	25	95	95	28	22	28	200	70	200	70	240	375	11	95	28
17.5	16	20	110	110	38	32	38	200	70	200	70	350	540	16	110	38
24	22	20	150	150	50	44	50	200	70	200	70	480	740	22	150	50
36	33	20	200	200	70	66	70	250	95	250	95	720	1100	33	200	70
48	44	20	250	200x	70x	95	70x	350	140	250	95	960	1500	33	200	70
72	66	20	350	250x	95x	140	95x	380	150	350	140	1440	2250	44	250	95
100	88	25	380	250x	95x	150	95x	550	230	350	140	2000	3100	44	250	95

145	132	40	550	250x	95x	230	95x	650	275	350	140	2900	4500	44	250	95
Non uniform insulation + fully insulated x Partially graded insulation (see 4.12.4) **Bushing Insulation**: All bushings shall have insulation levels 10% in excess of transformers requirements. If transformers are ≥5MVA minimum, the rating of the bushing is 33kV																

NOTE 1 Phase-to-phase values specified in this table for all transformer windings shall be designed to withstand the appropriate test voltages, and shall be tested as specified in **5.2.2.4**Induced voltage Withstand test

4.1.9.3 Moisture content

The moisture content of the oil before filling the transformer shall not exceed 10 ppm. The paper oil/paper moisture equilibrium chart shall be applied to the moisture-in-oil results obtained from a transformer oil sample taken at least 7 days after completing the oil and impregnation treatment. It shall be demonstrated that the moisture content in the paper insulation body of the transformer is less than 1 %.

It should be noted that modern on-load tap-changer technologies such as the vacuum type does not require any moisture content criteria to be met, only dielectric strength (60 kV/2.5 mm at time of handover). Furthermore, it is also required for these type of tap-changers to only maintain a dielectric strength of not less than 40 kV/2.5 mm for in-service conditions.

4.1.9.3.1 Insulation test blocks for moisture measurement

Insulation test blocks shall be made of the thickest insulation material used in the transformer and sized accordingly. Five test blocks shall be supplied to the purchaser, which shall be placed and fixed in a position for easy access through a hand- or manhole, in the transformer tank cover.

The location of the test blocks shall be indicated on a drawing which shall be part of the transformer manual.

4.1.9.4 Oil-filling/impregnation under vacuum

When a transformer is designed to be oil-filled under vacuum, an instruction to this effect shall feature prominently on the rating-and-diagram plate or on a separate plate mounted adjacent to it. All transformers installed in vacuum-proof tanks shall be oil impregnated and filled under vacuum. Oil impregnation or drying under vacuum shall be done with the transformer and oil at a temperature of at least 60˚C.

The duration of the treatment shall be demonstrated as adequate by means of water measurement with a cold trap. Whenever the active insulation or any paper insulated HV connections, especially those from the windings to the bushings, are exposed to atmosphere even for only a few minutes, these shall be re-impregnated under vacuum. Procedures shall be submitted for approval and full instructions shall be included in the transformer manual.

4.1.9.5 Preservation system

See 4.16.9 for the detail requirements of the conservator systems.

4.1.9.6 PCB content

All oils used in the transformer and its accessories shall be free of PCBs (zero ppm). A formal test certificate to this effect shall be included in the transformer manual.

4.1.9.7 Contact with bare copper

Bare copper in contact with transformer oil shall be minimized by using appropriate paper covering or painting.

4.1.10 Main terminals

4.1.10.1 Position of open terminals

4.1.10.1.1 HV/MV terminals

a) The high-voltage bushings shall be approximately parallel to the major axis of the transformer;

b) The medium-voltage bushings shall be approximately parallel to the major axis of the transformer, and symmetrical with the high voltage bushings. All terminal groups shall be arranged so that when viewed in the direction of power flow, the neutral terminal shall be on the left, followed by the line terminals in alphabetical order, as shown in figure 4. The power shall always be assumed to flow from the winding with the highest voltage rating towards all other windings.

Figure 4 — Position of terminals for power transformers

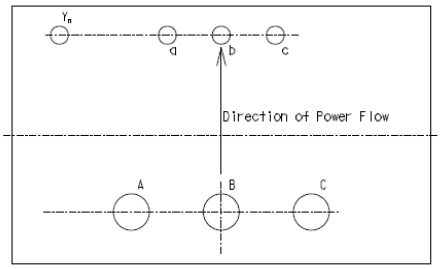

4.1.10.2 Terminal markings

The terminal markings on the diagram plate shall be as specified in appendix D of BS 171.Terminals shall be positioned as indicated in 4.10.1. Terminal markings characters shall be in relief, adjacent to their appropriate terminals. The characters may be of brass, steel or other acceptable metal and shall be permanently fixed to the tank by means of brazing or welding.

4.1.10.3 Bushings

4.1.10.3.1 Terminals

Unless otherwise specified in schedule A of an enquiry document, external air bushing terminals shall be solid copper or copper alloy cylinders of the diameter and length specified in table 6. They shall be electro-tinned in accordance with BS 1872, Classification Cu/z/Sn/10/b without subsequent heat treatment or machining.

Table 6 — Dimensions of outdoor air bushing terminals

Bushing Type	Diameter (mm)	Length(mm)
Primary	26	125
Primary Neutral	26	125
Secondary	38	125
Secondary Neutral	38	125

NOTE -Dimensional tolerances shall be as specified in BS 1433: Copper for electrical purposes – rod and bar: Neutral terminals shall be fitted with terminal connectors and bolted clamping plates, all tinned or plated, and suitable for connecting two undrilled 50 mm x 3 mm flat copper.

4.1.10.3.2 Continuous and overload currents

Bushing conductors shall be capable of safely carrying the currents implied by the short term and emergency overloading requirements in 4.2.2 without exceeding the temperature rise and hot spot limits specified in IEC 60137.

4.1.10.3.3 Short-time current

Bushing conductors shall be capable of safely carrying, for 3 s, the short-circuit currents resulting from the faults detailed in 4.2.5. This time factor allows for the possibility of having repetitive system short-circuits in quick succession.

4.1.10.3.4 Insulation levels and creepage distances

All bushings shall be able to withstand 10 % more test voltages than those specified in **table 5**. The creepage distances for the line terminals are based on 31 mm/KV (phase-to-phase) highest system voltages as specified in schedule A of an enquiry document.

The protected creepage distance to be given in schedule A of an enquiry document is the value of creepage distance in the rain shadow at an angle of precipitation of 90º to the bushing axis. This value shall not exceed 50 % of the total creepage.

4.1.10.3.5 Bushing types

(a) Outdoor immersed bushings

The requirements for Open bushings shall be stated in schedule A of the enquiry document.

(b) Completely immersed bushings

Connections from winding leads into cable boxes or oil filled disconnecting chambers shall be affected using completely immersed bushings.

(c) Capacitance graded bushings

Capacitance graded bushings may be supplied for in accordance with this specification.

(d) Resin impregnated bushings

Proven resin impregnated paper bushings are acceptable and may be specified for their advantage in reducing fire risks. Resin impregnated paper bushings shall be supplied with silicone rubber housings.

(e) Non-fluid bushings

Non-fluid filled capacitance graded bushings will only be accepted with specific approval

(f) HV Inner Cone Separable Connector type bushings

Proven moulded cast resin Tyco PHVT 145kV insulated bushings in accordance with IEC 62271-209 up to 145kV with corona shield and take-off bolt for compact design terminations will be specified in Schedule A when required.

Dust-proof and water tight cover disks for sealing of the bushings during transportation must be provided on all HV inner cone bushing sockets.

The need for voltage taps to be provided will be stated in Schedule A.

(g) MV Inner Cone Separable Connector type bushings

MV CONNEX Quadruple-Contact Elbow size 3 3150 Amp inner cone type bushings in accordance with BS EN50181 up to 52kV or equivalent approved inner cone type will be specified in Schedule A when required. Alternative size 3 connection arrangements will not be accepted unless approved by the Engineer. Bushings must be type tested according on IEC 60 840 /26 / 45 / 52 kV.

Corrosion-resistant aluminium casting Dummy Cable Connectors for sealing and voltage-proof closing of the bushings must be provided on all inner cone bushings.

The need for voltage taps to be provided will be stated in Schedule A.

4.1.10.3.6 Gauge glasses

Liquid filled capacitance graded bushings shall be provided with liquid level gauges, preferably of the direct-reading prismatic – or the magnetic type. Other types of liquid level gauges will only be accepted if specifically approved. The gauge glasses shall be installed so they can be read from ground level.

4.1.10.3.7 Test tapping's

Pressure contacts against the outer earth layer of the bushing are not acceptable. The test tap contact and earthing system shall be adequately designed so as not to be damaged by repetitive fast transient currents during the life of the bushing. Test tapping's of approved design and materials shall be provided on all capacitance graded bushings.

4.1.10.3.8 Safe mounting height

For compliance with safety regulations, open bushings shall be arranged and mounted on the transformer in such a manner that the minimum vertical working clearances listed in **table 5** are provided from finished ground level to live metal.

4.1.10.3.9 Mechanical forces

The maximum withstand values of cantilever load that may be applied to the external bushing terminals is 4kN.

4.1.10.3.10 Oil filling plugs

Filling plugs on bushings shall be located below the oil level so that any leak will be visible as an oil leak. Plugs shall be of a type requiring special tools for opening, filling and pressurizing the bushing. These filling plugs shall preferably be under oil during operation and not in any gas cushion space to ensure that any leaks will become visible as oil stains.

4.1.10.3.11 Oil sampling

Although it is not intended to take regular oil samples from bushings, a detailed description shall be provided in the transformer manual for the recommended method and procedures and all the necessary precautions, in the event that this becomes necessary.

4.1.10.3.12 Gaskets

Gaskets shall be of nitrile rubber or better material. All gaskets or O-rings shall be replaced after they have been disturbed but designs shall nevertheless be such as to be forgiving should this not be done. No metal shall bear directly on porcelain

4.1.11 Current transformers

4.1.11.1 Number and location

The number, ratings and location of current transformers associated with each power transformer, shall be as specified in table 7 and 8.

Table 7 Built-in Current transformers for star-delta transformers

Transformer		Built-in current transformer cores		
kV	MVA	Core 1	Core 2&3	Core 4
132/11	40	200/1	300/1	2400/1
132/33	45			
33/11				

4.1.11.2 Applicable standard

Current transformers shall comply with the requirements of IEC 60185 and IEC 60044 and shall be the “Class – X Type”.

4.1.11.3 Transformer short-circuits and overload

Current transformers shall be capable of mechanically and thermally withstanding the same over currents and overload, for the same periods, as the associated windings of the power transformer.

4.1.11.4 Insulation levels and short-circuiting for testing

Current transformers (including the neutral bushing CT's on partially graded neutrals) shall withstand all dielectric tests applied to the power transformer windings, and shall be in position and in circuit during the power transformer voltage withstand and impulse tests. Open circuits shall be avoided during testing of the transformer. All current transformers shall be shorted and earthed in the factory and delivered to site in that condition.

4.1.11.5 Tests

The current transformer shall be tested and test certificates provided as specified in section 5.

Table 8 Built-in Class "TPS" Current transformers

Class "X" core specification			
Turns Ratio N_p/N_s	I_m (Ma) (Max)	V_k (V) (Min)	R_s (Ω) (Max)
100/1	500	150	0.4
200/1	500	200	0.8
300/1	330	300	1.2
400/1	250	400	1.6
500/1	200	500	2
600/1	170	600	2.4
800/1	125	600	3.2
1000/1	100	650	4
1200/1	83	650	4.8
1400/1	71	650	5.6
1600/1	63	700	5.6
2000/1	50	700	8
2400/1	42	750	9.6
I_m= Excitation current , V_k= Knee point voltage			
The knee point of the excitation curve is the point at which a 10% increase in the voltage results in a 50% increase in excitation current			

4.1.11.6 Connections

4.1.11.6.1 Terminals and locknuts

Current transformer secondary terminals, where applicable, shall comply with the requirements of 4.13.5 and they shall be indelibly marked for identification as indicated in 4.11.8.1 and **figure 5**. All current transformer terminals inside the power transformer shall be of the stud type and all connections shall be securely locked using lock nuts or locking plates. Steel lock washers are not acceptable.

4.1.11.6.2 Secondary connection wiring and termination

The beginning and end of each secondary winding and all secondary tappings shall be wired to terminals in a terminal box accessible from ground level and thence to the free standing marshalling box, all as specified in 4.13.2.

4.1.11.6.3 (a) Termination of leads

Particular attention shall be paid to the termination of leads inside the transformer tank with a view to ensuring secure connection of current carrying lugs, and the elimination of all possible tension in the leads (see

4.13.3.).

(b) Conduit or armour

Where a current transformer's secondary leads are taken through conduit or armoured cables, all leads from one winding shall be included in one particular conduit or armoured cable.

4.1.11.7 Protective current transformers

4.1.11.7.1 Type

Protective current transformers shall be of the low-reactance type on all ratios.

4.1.11.7.2 Ratio

The nominal ratios for protective current transformers are specified in **tables 7**and **8**.

4.1.11.7.3 Turns compensation

Protective current transformers shall not be turns compensated.

4.1.11.7.4 Required data

The following information relating to protective current transformers shall be submitted for approval:

a) magnetization curve;
b) secondary winding resistance; and
c) secondary winding leakage reactance.

4.1.11.7.5 Designation

Where more than one protective current transformer is provided in any one phase, the current transformer designated "main protective current transformer" shall be located furthest from the transformer windings. In addition, protective current transformers together with current transformers in general, shall be given designations as indicated in figure 5.

4.1.11.7.6 Current transformers for delta-connected windings

The arrangement of protective current transformers associated with delta-connected power transformer windings, is indicated in figure 5.

4.1.11.7.7 Winding temperature indication for delta windings

Where the current transformer for a winding temperature indicator is associated with a delta-connected winding, it shall be located inside the delta so that it can detect all overcurrent conditions of the delta winding, including those circulating current conditions resulting from external earth faults on the associated power systems.

4.1.11.7.8 Type and accessibility

Current transformers shall preferably be of the bushing type. Separately mounted CTs shall be located above the core and winding assembly and be provided with adjacent handholds in the tank side or cover of a size adequate for their removal

and replacement.

4.1.11.8 Data for rating and diagram plates

Where current transformers are built into the transformer, the combined rating and diagram plate shall provide full details of the location of each current transformer, its polarity, secondary terminal markings and also all the information required by IEC 60044, with the provision that no information is duplicated. The following symbols may be used on rating and diagram plates:

a) IL = Secondary insulation level (d.c. 3 KV)

b) Hz = Rated frequency

c) I_{th} = Rated short-time current and rated time kA-s;

d) R_s= Secondary winding resistance at 75 ºC;

e) N = Turns ratio

f) V_k = Kneepoint voltage

g) I_m = Magnetizing current

h) I_p = Primary current

j) I_s = Secondary current

k) VA = Output in (VA).

4.1.11.8.1 Terminal markings

The system of marking used to identify the terminals for current transformers supplied with power transformers, shown in figure 5 shall indicate:

a) the polarity of the primary and the secondary terminals, or, where no primary terminals exist as such, the orientation of the current transformer; and

b) the current transformer designation, viz.

   i) the connection in which it appears (e.g. a phase or neutral connection);

   ii) the sequence relative to other current transformers appearing in the same connection.

The current transformer winding (primary and/or secondary) and its polarity shall be denoted by the letter P and/or S and the numerals 1 and 2 as specified in BS 3938. The convention used shall always place P1 (and/or S1) nearer the external terminal of the transformer and P2 (and/or S2) nearer the winding.

The winding alpha-numeric and the polarity alpha-numeric shall be prefixed by letters denoting the phase or neutral connection (see figure 5) in which the current transformers appear and these alphanumeric shall be prefixed by numerals giving the sequence of the current transformers relative to other current transformers in the particular phase or neutral connection, as indicated in figure 5. These numbers shall be counted in the case of star-connected windings, from the power transformer external terminal towards the neutral point connection, and, in the case of delta-connected windings, in a direction from the external terminal through the particular phase winding towards the junction with another phase.

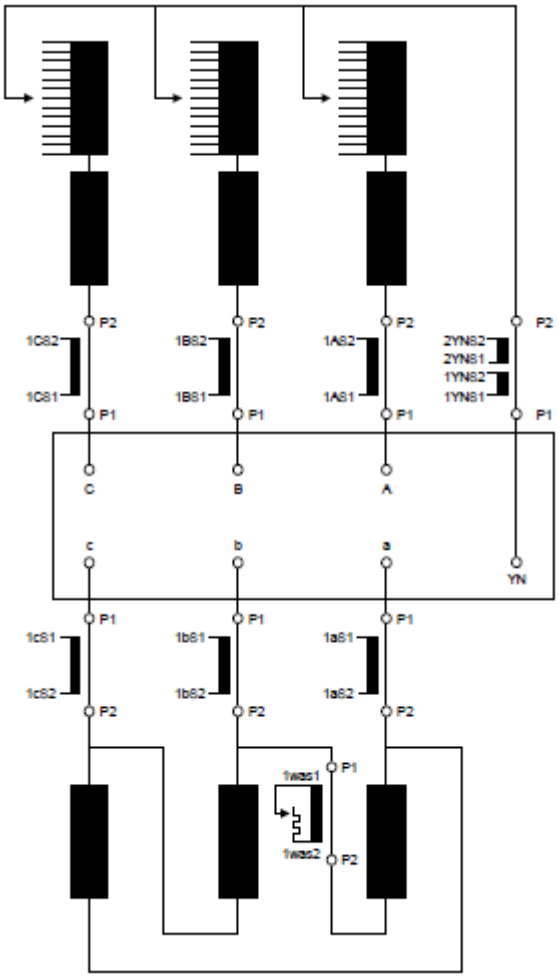

Figure 5- Current transformer terminal markings

4.1.12 Voltage variation and control

4.1.12.1 Tapping ranges

See 4.3.2 for the standard tapping ranges.

4.1.12.2 On-load tap-changing equipment

On-load tap-changing equipment shall:

a) comply with IEC 60214;

b) be of the vacuum resistor type; and

c) be designed for 50 000 operations per year, with a 5 year maintenance cycle.

4.1.12.2.1 Ratings

(a) Current ratings

The rated through current of the tap-changer, as defined in 4.17 of IEC 60214, shall not be less than that resulting from the highest value of continuous maximum load in the tapping winding of the transformer (It shall be able to operate at the emergency and overload ratings of the transformer without damage (see 5.7)). It is permissible that tap-changing be inhibited during transformer overload conditions above 1,5p.u.

(b) Short-circuit currents

In addition to the requirements of 8.3 of IEC 60214 for on-load tap-changers, tap-changing equipment shall be capable of carrying the same currents, due to external short-circuit, as the transformer windings with which they are associated. (see 5.7).

(c) Insulation level

Notwithstanding the requirements of 8.6 and Table V of IEC 60214, on-load tap changing equipment, including all insulating and barrier boards, shall withstand the impulse and dielectric test voltages applicable to the part of the transformer windings with which they are associated, as specified in Table 5. If any specific critical phase-to-phase insulation situations exist in the transformer it should be noted that the purchaser's surge arresters will only limit incoming surges on a phase-to-earth basis and that phase-to-phase insulation will therefore be protected by two arresters in series. This particularly applies to three-phase line end tap-changers and their leads, as well as the leads of single-phase tap-changers. The transformer design shall cater for this situation.

4.1.12.2.2 Design of the tap-changer

(a) Replacement of current switching contacts

The current breaking contacts of diverter switches shall be easily replaceable.

(b) Diverter and selector switch compartments

Drop-down tanks that necessitate the provision of pits in the foundations are unacceptable. Each diverter and selector switch compartment shall be provided with an oil drain valve or plug. Care shall be taken to close the drain valve or plug of the diverter compartment before operating the tap-changers on load in the factory or after installation. Failure to do so will require full reprocessing of the oil in the transformer at the contractor's cost.

Current breaking switches (e.g. diverter and selector switches as distinct from tap selectors and change-over selectors) shall not operate in the insulating oil of the main transformer. The insulating oil for these switches shall be completely segregated in an oil and gas-tight compartment separate from that in the main transformer tank and the oil conservator for maintaining the oil level in the compartments containing such switches, shall be separated from the main transformer oil conservator. Where a common conservator tank construction is employed to serve the main tank and the tap-changer switching compartment, the two bodies of oil shall be segregated by an oil and gas tight steel partition. Each body shall have its own separate dehydrating breather and oil level indicator that shall be clearly labelled to relate it to the corresponding oil body.

(c) Protective devices for diverter and selector switch compartments

Protective functions to be provided for diverter switch and selector switch compartments shall effect the tripping of the circuit-breakers controlling the transformer in the case of:

i) low oil level (may be omitted if a surge relay, that fulfils this function, is provided).

ii) a surge of oil produced by a fault inside the compartment, or a rise in pressure or temperature resulting from such a fault, whichever one of these three is most appropriate to the design of the apparatus.

Transformers shall be equipped with one protective device. Where a pressure sensitive device is provided, its contact shall close under steady increase of pressure, at a value not less than 100 kPa, or as recommended by the manufacturer, taking the head of oil into consideration.

(d) Breather

The oil in diverter switch and selector compartments shall only communicate with the atmosphere through a dehydrating breather containing a silica gel charge of at least 2 kg.

(e) On-line oil filtering and drying

Tap-changers expected to perform more than 30 000 operations per year (see schedule A of an enquiry document) shall be equipped with an approved on-line filtering and drying system to improve the maintenance interval.

(f) Buchholz relay for selector compartment

Where tap selectors and change-over selectors are contained in compartments separate from current breaking switches, those compartments shall be protected by the Buchholz relay serving the main transformer tank, unless separate oil surge and low-oil level relays are provided. Provisions shall be made for filtering and draining the oil in those compartments.

(g) Alarm and tripping contacts for protective devices

These contacts shall comply with the requirements of 4.13.2.7.

(h) Strength of tap-changer compartments and insulating barriers

Tap-changer compartments and insulating barriers shall have adequate strength to resist, without suffering significant permanent distortion or damage of any sort, the forces resulting from the application of a full internal vacuum at sea level.

In the case of insulating barriers, the vacuum is not equalised (i.e. applied from one side only, against atmospheric and oil pressure on the other side), and applied internally from either side. Where such insulating barriers serve tap-changers mounted wholly within the transformer tank, (e.g. diverter switch cylinder) the application of the vacuum or pressure may be equalized on both sides of a diverter switch compartment by interconnecting the two conservators.

(i) Sealing of tap-changer parts for transport

Where it is necessary to remove parts or the whole of the on-load tap changer for transport purposes, it shall be possible, unless otherwise approved, to complete erection on site with the transformer windings and terminal insulation covered with oil.

4.1.12.2.3 Driving mechanism, control and indicating equipment

(a) Enclosures of apparatus

The driving mechanism shall be enclosed in a ventilated, dust-proof, weather-proof and vermin-proof cubicle provided with an a.c. 230 V, separately fused, anti-condensation heater and switch (with a solid withdrawable link in its neutral lead), and, at its lowest point, with a 25 mm diameter gauze covered drain hole. Where a gland plate for cables is provided, ample space shall be allowed from the terminal strip for arranging the entry of the cable cores.

NOTE Unless specified to the contrary, the automatic and remote control panels and equipment for the on-load tap-changer control will be supplied and installed by the purchaser.

(b) Design of driving mechanism: synchronism and limit stops

The driving mechanism shall be so designed that once a tap-changing operation has been initiated, the diverter switch or selector switch contacts will not remain in an intermediate position should the power supply for the driving unit fail. The design shall include means to ensure that tap-changers fitted to three single-phase units, or units operating in parallel, remain in step. Mechanical stops shall be provided to prevent the mechanism from overrunning its end position.

(c) Manual operation

For maintenance and emergency operation of the tap-changing equipment, a readily detachable handle shall be provided for manual operation. Adequate provision shall be made to prevent the diverter switch or selector switch contacts being left in an intermediate position when operated manually. To prevent power operation with the handle in position, a normally closed contact in the control or motor circuits shall be provided that opens when the handle is inserted. The tap-changer shall be accessible from ground level (±1,2 m from base plate).

(d) Electrical operation

Items 4.12.2.3(d).i to 4.12.2.3(d).xi are the minimum equipment requirements and these shall be mounted in the driving mechanism enclosure or other suitable kiosk, mounted near the transformer. The following points shall be complied with:

Control relays shall only respond to control initiation pulses of 150 ms duration or longer. The rating of control relay contacts shall be in accordance with 4.12.2.9. All contactor operating coils and trip coils shall be rated at d.c. 110 V. The tap-changer shall be accessible from ground level (1,2 m from base plate).

i Tap-changer drive motor

A tap-changer drive motor rated at: 400 $V_{a.c.}$, three-phase, 50 Hz or 230., single-phase, 50 Hz shall be fitted. Only single-phase motors with continuously rated starting windings without centrifugal switches will be acceptable

ii Tap-in-progress indication

In the case of a three-phase drive motor, a terminal shall be provided for the neutral of the a.c. 400/230 V supply and one terminal of the motor shall be connected to an external terminal for a “tap-in-progress” lamp. In the case of a single-phase drive motor, a “tap-in-progress” indication contact similar to contact ‘A’ of 4.12.2.3(d).viii, shall be provided.

iii Circuit-breaker for motor protection

- For a three-phase drive motor, a circuit-breaker fitted with three-phase thermal overload protection and single-phasing protection and a separate d.c. shunt trip coil shall be provided. The trip coil shall be provided with a contact to break its own current if the coil rating exceeds 50 W. The trip coil rating in watts shall be stated on the OLTC drive schematic diagram.

- Where “raise” and “lower” contactors are fitted, both the circuit-breaker and the d.c. shunt trip coil shall be provided.

iv Protection of tap-changer during system faults

A self-resetting contactor shall be provided in the motor circuit for overcurrent blocking of the tap-changer drive under system fault conditions. The contactor shall be fitted with a d.c. operating coil, and normally closed contacts capable of interrupting motor starting currents. Contactors with normally open contacts that require the coil to be continuously energised are not acceptable.

NOTE In the case of single-phase drive motors, with a starting or running current that will not at any time exceed 5 A, this contactor is not required.

v Local control

"Raise" and "Lower" push-buttons or a control switch for the local control, mechanically or electrically interlocked, shall be provided. The raise/lower control devices shall be connected to separate terminals for use in the purchaser's control scheme. They shall not be connected for direct control of the OLTC drive.

vi "Raise and Lower" motor-operating contactors

Direct-current operated "Raise" and "Lower" contactors for controlling motor direction shall be provided. For single-phase motors the "NOTE" under 4.12.2.3(d).iv applies here also.

vii Completion of tap-change operations

Auxiliary contacts shall be provided for sealing "Raise" and "Lower" contactors and mechanism contact "A" for controlling the sealing of the "Raise" and "Lower" contactors (see 4.12.2.3(d).iv).

viii Step-by-step and parallel operation

The manufacturer shall provide and install all the appropriate equipment and circuitry inside the driving mechanism (ie. Contacts, relay(s) etc.) in order to perform the full step-by-step function for operation of step-by-step relay(s) within the mechanism box, single or two contacts shall be provided. When a single contact is used this must close in either "Raise" or "Lower" direction, when two contacts are used, one contact shall close only when the drive moves in the "Raise" direction and the other shall close only when the drive moves in the "Lower" direction. These contacts may take the form of mechanism contacts or, alternatively, auxiliary contacts on the "Raise" and "Lower" contactors may be used. In the latter case an additional mechanism contact, similar to 'A' in 4.12.2.3(d).vii above shall be provided for the step-by-step circuit if the 'A'-contact is the normally open type, i.e. if the mechanism contact through which the "Raise" and "Lower" contactors are sealed is the type that is open in the rest position and closed during operation.

The essential features of the contacts provided for the step-by-step circuit are that they shall not operate the step-by-step relays before the “Raise” and “Lower” contactors have had time to seal themselves in, and that they shall remain closed throughout a tap-change operation, and, preferably, also throughout a transition step. If they do not remain closed throughout a transition step, then a spare mechanism contact ‘B’ shall be provided and wired to separate terminals.

ix Tap position indication, supervision and monitoring

Two sets of coded, voltage free contacts shall be provided on the Tap position switch for use in parallel checking circuit. This switch may take the form of either a change-over switch that changes its position at the end of each tap-change operation or a multi-position rotary switch with as many contacts as there are taps on the transformer. These switches shall be of the break-before-make type.

x Limit switches

Limit switch contacts, to prevent the tap-changer from overrunning the end positions, shall be provided. These contacts shall be provided where indicated in the initiating circuits and shall preferably be provided in the motor circuits as well if, in the case of single-phase motors, motor contactors are provided.

NOTE The preceding clauses list the purchaser’s minimum requirements, but if the contractor wishes to add further relays (e.g. for step-by-step control), this is acceptable though not desirable.

xi Approval of components

All contactors, switches, circuit-breakers, relays and contacts incorporated in the electrical control of tap-changers, shall be subject to the purchaser’s approval.

4.1.12.2.4 Mechanical tap position indicators

An externally visible mechanical tap position indicator shall be provided on the driving mechanism. The tap-changer shall be accessible from ground level.(1.2 m from base plate).

4.1.12.2.5 Maximum and minimum tap position indicators

Maximum and minimum tap position indicators arranged for manual resetting shall be fitted to the driving mechanism to register the operating range encountered in service.

4.1.12.2.6 Operation counters

Externally visible mechanical counters (e.g. cyclometers) shall be provided to register the number of tap-change operations. These recorders shall have at least five digits, and shall have no provision for resetting. These counters shall be of suitable quality for at least 10^6 operations.

This shall be supported by a type test certificate. The tap-changer shall be accessible from ground level (1.2 m from base plate).

4.1.12.2.7 Drawings and technical data

(a) Details on transformer outline drawings

The main features of tap-changers, including the fittings and protective devices specified, shall be indicated on the transformer outline drawings.

(b) Schematic diagrams

Transformer on-load tap changer drive schematic diagrams showing the rating in watts of the d.c. shunt trip coils fitted to the driving motor circuit breakers, shall be supplied. The contractor shall indicate on this diagram which of the requirements, detailed in 4.12.2.3(d) above, each device will fulfil.

(c) Timing charts

A diagram or chart showing the relative timing of all contacts during both a regular tapping step and a transition step shall be provided.

4.1.12.2.8 Tap position numbering

For both off-circuit and on-load tapping arrangements the tap position shall be numbered so that an increase in tap position number represents an increase in the controlled or outgoing voltage. Controlled secondary voltage is defined as the voltage that is changed as a result of the change in tapping's. In the case of interconnection or coupling transformers involving power flow in both directions the controlled voltage will be specified in schedule A of an enquiry document

NOTE Transition steps that give the same outgoing voltage should all take the same tap position number, distinguished in each instance by a lower case letter; e.g. 9(a), 9(b) and 9(c) where there are three transition steps.

4.1.12.2.9 Alarm, control and tripping contacts

Alarm and tripping contacts shall be provided with electrically independent and unearthed circuits and shall be insensitive to vibration and earth tremors. This insensitivity shall not depend on the method of mounting, but shall be an inherent feature of the contact assembly. Auxiliary relays shall not be used.

Alarm and control contacts

Contacts providing alarm output shall be rated as follows:

i) Make and carry for 200 ms 5 A @ d.c. 250 V

ii) Carry for 1 s 2 A @ d.c. 250 V

iii) Carry continuously 1 A @ d.c. 250 V

iv) Break (inductive L/R = 40 ms) 20 W @ d.c. 250 V

Tripping contacts

Contacts providing trip outputs shall be rated as follows:

i) Make and carry for 200 ms 5 A @ d.c. 250 V

ii) Carry for 1s 2 A @ d.c. 250 V

iii) Carry continuously 1 A @ d.c. 250 V

iv) Break (Inductive L/R = 40 ms) 20 W @ d.c. 250 V

Tests

Devices fitted with alarm and tripping contacts shall be tested as specified in 5.

4.1.12.2.10 Standard on-load tap-changer control schemes: minimum requirements for driving mechanisms:

(a) If the motor is continuously rated for the stalled condition, thermal overload protection may be omitted.

(b) Where 'raise' and 'lower' contactors are not provided and the motor current does not exceed 5A when starting or running, the requirement for a separate d.c. shunt trip coil may be omitted.

(c) In the case of single-phase motors continuously rated for the stalled condition and with a motor current not exceeding 5 A when starting or running, circuit-breaker protection may be omitted entirely, provided no 'raise' or 'lower' contactors are fitted.

Table 9 - Contact state at each tap position

Position	20	10	8	4	2	1
1	0	0	0	0	0	1
2	0	0	0	0	1	0
3	0	0	0	0	1	1
4	0	0	0	1	0	0
5	0	0	0	1	0	1
6	0	0	0	1	1	0
7	0	0	0	1	1	1
8	0	0	1	0	0	0
9	0	0	1	0	0	1
10	0	1	0	0	1	0
11	0	1	0	0	1	1
12	0	1	0	0	0	0
13	0	1	0	0	0	1
14	0	1	0	1	1	0
15	0	1	0	1	1	1
16	0	1	0	1	0	0
17	0	1	0	1	0	1
18	0	1	1	0	1	0
19	0	1	1	0	1	1
20	1	0	0	0	0	0
21	1	0	0	0	0	1
0 = contact open			1 = contact closed			

4.1.13 Auxiliary supplies, terminal boxes, wiring and cabling

4.1.13.1 Auxiliary supplies

The auxiliary power supply shall be rated at a.c.400/230 V, three-phase, 4-wire, 50

Hz. The unearthed d.c. supply shall be 110 V.

4.1.13.2 Terminal boxes

4.1.13.2.1 Terminal boxes and covers

Marshalling boxes and terminal boxes with an IP55 rating with easily removable covers fixed by not more than two screws shall be provided. Covers for terminal boxes may be of the slip-on type and those for marshalling boxes shall preferably be hinged in a vertical plane. Covers in a vertical plane shall, in addition to a gasket seal, be provided with a double-curved flange along the top edge and sides. The door opening in the box shall have a double-curved flange around its entire perimeter, the outer face of which shall form the gasket joint. The top of the box shall be made to overhang the cover, except in the case of slip-on covers. These shall be double-curved and fitted with drip ledges to prevent internal corrosion. Where applicable, access to equipment from the rear shall be provided subject to the purchaser's approval.

NOTE hinged panels are acceptable.

4.1.13.2.2 Venting and draining

Marshalling boxes and terminal boxes, arranged in a vertical plane, shall be provided with a 25 mm vent and drain hole covered by a fine mesh of non-corrodible wire, fitted at the lowest point. This fitting shall be flush inside to allow total drainage.

4.1.13.2.3 Earthing terminal

An earthing terminal consisting of a stainless threaded stud with a M16 stainless steel or brass nut shall be provided in each terminal box and marshalling box on both the inside and outside.

4.1.13.2.4 Spare terminals

Each marshalling box shall be provided with not less than 10 % spare terminals with a minimum number of twelve, unless otherwise agreed.

4.1.13.2.5 Incoming auxiliary circuits

To prevent entry of water, the auxiliary wiring from the gas- and oil-actuated relay, current transformers and other auxiliary apparatus, shall be arranged for side or bottom entry into the marshalling box.

If bottom entry is adopted, the gland plate used shall be independent of that provided for the purchaser's outgoing cables.

4.1.13.2.6 Provision for outgoing cables

The marshalling box shall be provided with a separate, removable, un-drilled 4 mm thick aluminium gland plate to take the purchaser's cable glands, mounted at least 100 mm below the bottom of the terminal blocks, or other equipment, in such a manner as to facilitate the entry of the purchaser's cables. The gauze covered drain and vent hole may be fitted to this gland plate.

4.1.13.2.7 Contactors

Contactors shall not be mounted directly on the back plate of winding temperature or oil temperature indicators, as vibration can cause these indicators to read incorrectly.

4.1.13.3 Wiring

4.1.13.3.1 Insulation

Wiring insulation shall be oil- and moisture-proof, and, where affected by temperatures above that of the ambient air, shall have thermal characteristics at least equal to class 'A' of IEC 60085.

4.1.13.3.2 Insulation test voltage

All auxiliary circuits shall withstand a test voltage of 2 $kV_{r.m.s.}$ to earth and to all other circuits.

4.1.13.3.3 Type of conductor

All secondary wiring used for current transformer secondary's and other auxiliary equipment shall have a minimum cross-section of 2.5 mm² with a minimum of 30 strands, it shall be flexible, 660/1000 V grade wire in accordance with SANS 1507 or to the purchaser's approval. As an alternative 4 mm², with a minimum of 7 strands may be used.

4.1.13.3.4 Protection of external wiring

External wiring shall be either, in conduit, in a metal protective channel or in the form of armoured cable. Mineral insulated copper sheathed cables shall not be used.

4.1.13.3.5 Fixing of wiring

All wiring shall present a neat appearance and shall be either braced, clipped and/or laced or placed in rust-proof trunking or conduit. Armoured cables shall be supported away from the transformer surfaces on cable rails. All terminals and labels shall be easily accessible after wiring and cabling has been completed.

4.1.13.3.6 Termination of wiring

(a) Connections

Where insulation is stripped from the wires in order to make connections, the conductors shall be left clean and undamaged. Only the required minimum length of insulation shall be removed, preferably with a thermal stripping device.

(b) Termination of internal wiring and terminal boxes

All wiring connected to the terminals of auxiliary apparatus within the transformer tank shall be terminated at the termina*ls of a terminal box on the tank wall or cover plate. These terminals, or tags permanently attached to them, shall be indelibly* marked with the terminal marking of the corresponding terminal of the internal apparatus and also its wiring designation (see 4.11.8.1). The terminal marking tags, where used, and the terminals themselves shall be so fixed to their respective bushings or barrier board that there is no possibility of the internal connection or the terminal slackening, or of the removal of the terminal marking tag during the process of applying or removing the external connection.

(c) Termination of external wiring

All wiring from alarm and tripping contacts, current transformer secondary terminal boxes or any other apparatus on the transformer requiring connection to external circuits shall be terminated in a marshalling box situated on the transformer at a height approximately 1.5 m above ground level.

4.1.13.3.7 Identification of wiring

All equipment boundary/interface terminals and the equipment wires connected to those terminals shall have a unique wire/terminal number. The wires shall be marked with black letters impressed on a white background or black letters on a yellow background providing that the colour selected is consistent throughout the panel and/or suite of panels and is to the purchaser's approval.

4.1.13.3.8 Marshalling interface box

A Marshalling Interface Box (MIB) with a standard terminal layout that includes all transformer terminals, neutral earthing compensator terminals and tap change drive terminals shall be provided. The MIB shall consist of a single box that houses at least 116 terminals and shall be mounted on the side of a transformer, or mounted on a separate loose standing frame.

Spare terminals may be used by the manufacturer to terminate any extra functions that will not normally be used in a purchaser's application. He may however not deviate from the prescribed terminal allocation. Terminals indicating functions that are not provided by the manufacturer shall be left open. The manufacturer shall fit partitions between terminals X1.26, X1.27, X1.28, X1.29, X1.30, X1.31, X1.32, X5.1, X5.2, X5.3, X5.4, X5.5, X5.6, X6.1 and X6.2.

The Employer will supply and terminate four 19-core 2.5 mm^2, one 4-core 4.0 mm^2 and one 4-core 16 mm^2 cables between the MIB and the transformer protection and tap change control cabinet in the substation control room.

Table 10 — Standard layout for marshalling interface box fitted to transformers

Device	Abbreviation	Terminal number	Wire Marking	Application
Gas and oil relay	G.O.R	X1.1 – X1.2	X1.1 – X1.2	Trip
		X1.3 – X1.4	X1.3 – X1.4	Alarm relay
Pressure relief valve	P.R.V	X1.5 – X1. 6	X1.5 – X1.6	Normal open contact
		X1.6 – X1.7	X1.6 – X1.7	Normal closed contact
On Load Tap-Change Protection	O.L.T.C. Prot	X1.8 – X1.9	X1.8 – X1.9	Normal open contact
		X1.9 – X1.10	X1.9 – X1.10	Normal closed contact
Oil temperature indicator	O.T.I	X1.11 – X1.12	X1.11 – X1.12	Trip
		X1.13 – X1.14	X1.13 – X1.14	Alarm relay
HV Winding temperature indicator	H.V.W.T.I	X1.15 – X1.16	X1.15 – X1.16	Trip
		X1.17 – X1.18	X1.17 – X1.18	Alarm relay
MV Winding Temperature indicator	M.V.W.T.I	X1.19 – X1.20	X1.19 – X1.20	Trip
		X1.21 – X1.22	X1.21 – X1.22	Alarm relay
Oil level indicator	O.L.I	X1.27 – X1.28	X1.27 – X1.28	Oil level alarm High/Low
Tap-change oil level indicator	O.L.T.C.O. L.I	X1.29 – X1.30	X1.29 – X1.30	Oil level alarm High/Low
Cooler abnormal		X1.33 – X1.34	X1.33 – X1.34	Common alarm for Cooler
Fans		X1.35 – X1.38	R, S, T ,N	3Øcontrol supply
Fans		X1.39 – X1.41	X1.39(+),1.40(-), X1.41	Cooler stop supply
HV “A” phase CT		X2.1 – X2.2	1AS1 – 1AS2	Protection
HV “B” phase CT		X2.3 – X2.4	1BS1 – 1BS2	Protection
HV “C” phase CT		X2.5 – X2.6	1CS1 – 1CS2	Protection
MV “a” phase CT		X2.7 – X2.8	1As1 – 1As2	Protection
MV “b” phase CT		X2.9 – X2.10	1Bs1 – 1Bs2	Protection
MV “c” phase CT		X2.11 – X2.12	1Cs1 – 1Cs2	Protection
HV neutral CTs		X2.13 – X2.14	1YNS1 – 1YNS2	Protection
		X2.15 – X2.16	2YNS1 – 2YNS2	
HV “A” phase CT		X2.27 – X2.28	2AS1 – 2AS2	Protection
HV “B” phase CT		X2,29 – X2.30	2BS1 – 2BS2	Protection
HV“C” phase CT		X2.31 – X2.32	2CS1 – 2CS2	Protection
MV “a” phase CT		X2.33 – X2.34	2As1 – 2As2	Protection
MV “b” phase CT		X2.35 – X2.36	2Bs1 – 2Bs2	Protection
MV “c” phase CT		X2.37 – X2.38	2Cs1 – 2Cs2	Protection
		X3.1 – X3.4	L1, L2, L3, N	3 Ø Motor supply
		X3.5 – X3.6	L, N	1Ø Heater and encoder supply
		X4.1 – X4.2	+, -	Control d.c.

			supply(When required)
Tap-Changer	X4.3 – X4.4	X4.3 – X4.4	Parallel check for even taps
	X4.5 – X4.6	X4.5 – X4.6	Parallel check for odd taps
	X4.7 – X4.9	X4.7 – X4.9	Local control Switch (7 Com, 8 Raise, 9 Lower)
	X4.10 – X4.11	X4.10 – X4.11	Seal In for raise operations (When required)
	X4.12 – X4.13	X4.12 – X4.13	Seal in for lower operations (When required)
	X4.14	X4.14	Initiate raise operation
	X4.15	X4.15	Initiate lower operation
	X4.16 – X4.17	X4.16 – X4.17	Energise O/C block contactor (Negative may be commoned)
	X4.18 – X4.19	X4.18 – X4.19	Trip motor supply MCB (Negative may be commoned)
	X4.20 – X4.21	X4.20 – X4.21	Motor supply MCB has tripped
	X4.22 – X4.23	X4.22 – X4.23	Indication for tap-Change in progress
	X5.1 – X5.6	X500,X501, X502, X504, X508, X510	Binary coded decimal Output to tap position Indicator
	X5.7 – X5.12	X600,X601, X602, X604, X608, X610	Binary coded decimal output remote indication

Interlocking “slip-on” types of ferrules are preferred and shall match the size of wire onto which they will be fitted. For heavy conductors and very light wiring (telephone type) where the preferred type of marking ferrules is not available, other methods may be approved. Ferrules shall be arranged to read upright on cable terminal strips and to read from terminal to insulation in the case of relay apparatus and instrument connections.

4.1.13.4 Auxiliary cabling

4.1.13.4.1 Cabling by the contractor

Where a separately mounted outdoor control cubicle is provided near the transformer and where the contractor is responsible for erection, he shall provide and connect all cabling between this control cubicle, the transformer marshalling box and the auxiliary apparatus on the transformer together with all necessary cable fittings, attachments and identification of cables and cable cores. All cables

shall be PVC/PVC/SWA/PVC.

The contractor shall supply details of any cable trenches required at the time of submitting the outline drawings for foundation works. (SWA = Steel Wire Armouring) Cabling for on-load tap-changers may be terminated at the appropriate mechanism box. All other cabling shall be terminated at one point, which shall be the marshalling box or the separately mounted outdoor control cubicle, where the latter is provided.

4.1.13.4.2 Cabling by the purchaser

Multi-core cabling to the remote control point will be provided by the purchaser.

4.1.13.4.3 Identification of fuses

All fuses shall be labelled indicating the rating and circuit.

4.1.13.5 Secondary terminals

4.1.13.5.1 General

All terminals for connection to external circuits shall be subject to the purchaser's approval. Not more than two conductors shall be connected to any side of a terminal, so that the size of all terminals shall be suitable for the termination of two external cables of 4 mm² each. All terminals shall be suitable for use with crimped or compression type terminations.

4.1.13.5.2 Materials and construction

a) Moulding materials shall be self-extinguishing, or resistant to flame propagation, substantially non-hygroscopic, and shall preferably not carbonize when tested for tracking. The mouldings shall be dimensionally stable and have high impact strength.

b) Mouldings shall be mechanically robust and shall withstand the maximum possible torque that may be applied to the terminal screws. Terminals where pressure is applied to the moulding when tightening the terminal screw or nut are not acceptable.

c) Steel parts, other than stainless steel, shall be plated and made passive. Current carrying parts shall be non-ferrous and plated. All plating shall be compatible with other parts and terminations. Screws into steel shall be steel, stainless steel or phosphor bronze. All plating shall comply with BS 1706 and BS 3382 Parts 1, 2 and 5.

d) The minimum external creepage distance between adjacent terminals and between terminals and earth shall be not less than 8 mm when determined in accordance with BS 142 annex G.

e) Tapped holes shall have not less than 3 full threads. Separate terminals shall be provided on each unit for incoming and outgoing connections, and their contact pressures shall be independent of each other.

f) Manufacturers shall nominate the maximum and minimum torque to be applied to the terminal screws.

g) Terminal covers or shrouds shall be of insulation material, self-extinguishing or resistant to flame propagation and shall preferably clip onto the moulding.

4.1.13.6 Mounting of terminal blocks

4.1.13.6.1 Dimensions

The dimensions of mounting rails shall be in accordance with DIN 46277 parts 1, 2 and 3.

4.1.13.6.2 Retaining

The units shall be spring retained on the assembly rail and when mounted and wired as in service, shall be close fitted to avoid the accumulation of foreign matter between adjacent units. End barriers or shields shall be provided for open sided patterns.

4.1.13.6.3 Replacement

It shall be possible to replace any unit in an assembly without dismantling adjacent units; it shall be permissible however to loosen any clamping device. Screw retention of any component from the rear of the mounting rail is not acceptable.

4.1.13.7 Type of terminal block

4.1.13.7.1 Spring loaded

A rail mounted screw clamp/spring loaded insertion type terminal block suitable for the reception of hooked blade type wiring lugs shall be provided. The terminal blocks shall be of the type that compresses the lug between two plates using terminal screws. Terminals shall also be spring loaded such that the action of the spring is independent of the action of the terminal screw.

a) Terminal screws shall be captive within the mouldings and the heads shall not project above the moulding when fully released. Each terminal shall accept up to two hooked blade type terminations.

b) Terminal entries shall be shrouded so that no current carrying metal is exposed when hooked blade terminations are fitted.

c) Springs shall be aged and shall withstand corrosion that might affect performance during their working life. Springs shall not carry current.

d) Cross connection facilities shall be provided for common coupling of two or more adjacent terminal blocks, without interfering with the terminal openings.

4.1.13.7.2 Heavy duty stud type

a) For use in circuits up to 500 V maximum, at maximum continuous current ratings of 30 A for M5, and 50 A for M6 stud sizes.

b) Two terminal studs shall be provided for each way, and these shall be of sufficient length to accommodate two ring tongue or flanged spade terminations in addition to a full nut and all necessary plain and spring washers.

c) M5 studs shall be of phosphor bronze or stainless steel. M6 studs shall be of brass, phosphor bronze or stainless steel. Solid studs only shall be provided. Studs that are slotted or drilled to receive the conductor are not acceptable.

d) Loose links, where provided, shall be secured by a nut and washers, and shall be tin plated copper or brass.

e) Barriers of insulation material, self-extinguishing or resistant to flame propagation and substantially non-hygroscopic shall be provided between terminal ways. These barriers shall project at least 3 mm above the studs.

4.1.13.7.3 Pinch screw type

Terminals in which the screw or the means of applying the securing pressure bears directly on the termination or conductor as found on domestic electrical fittings, are not acceptable for use in control/relay panels.

4.1.14 Tanks

4.1.14.1 Component approvals

The components and fittings associated with transformers covered by this specification shall be subject to the purchaser's approval. Samples, technical literature, drawings, test reports and lists of the names of the principal users, with experience gained, shall be supplied on request. The burden however, is on the contractor to only submit components for approval to the Employer if the components have been approved by the manufacturer for use on this transformer. Standardized, approved components already used by the Employer are preferred to minimize spares holdings.

4.1.14.2 Materials and welding

Unless otherwise approved, metal plate, bar and sections for fabrication shall comply with BS 4360: Welding shall comply with BS 5135. Welds exposed to the atmosphere shall be continuous. Dye Penetrant tests shall be carried out on load bearing joints. All sharp edges are to be rounded in the manufacturing process prior to coating.

4.1.14.3 Corrosion protection and paint finish

4.1.14.3.1 General

The interior and exterior surfaces of the tank, the tank cover and (when fitted) the conservator shall be either abrasive blast-cleaned or pickled, rinsed and dried, both in accordance with the procedures set out in SABS 064 and, immediately, prior to coating, shall be free from rust, grease, oil and moisture. Abrasive blast cleaning shall only be used where the thickness of the steel plate is 3 mm or greater. Special attention shall be given to the surface preparation of the welded areas of the covers and tank rims of sealed transformers. All spatter, slag and flux shall be removed and the areas cleaned back to bare metal immediately.

NOTE SABS 064 recommends that after the surfaces have been blast-cleaned, a coating be applied before contamination or oxidation of the surfaces can occur. For guidance, a coating should be applied not later than 1 h after blast-cleaning.

4.1.14.3.2 Coating of interior surfaces

The interior surfaces of the tank, the cover and the cooling equipment shall be clean and dry immediately prior to filling the transformer with oil. Interior surfaces (other than those of cooling tubes and headers) above a line that lies at least 50 mm below the oil level that corresponds to an oil temperature of 20 °C shall be corrosion-protected by varnishing, priming or painting, using materials that are not affected by, or will not adversely affect the electrical or chemical properties of, the insulating oil.

NOTE: Temporarily protect the remainder of the interior surfaces from corrosion (by varnishing, oiling or applying a corrosion preventative) until the transformer is filled with oil.

4.1.14.3.3 Coating of exterior surfaces

The exterior surface shall be coated by first shot-blasting and then within 30 minutes, zinc spray to a minimum thickness of 0.15 mm.

4.1.14.3.4 External surfaces: Colour, corrosion proofing and finishing

All external surfaces, with the exception the oil conservators shall be finished with two contrasting finishing coats, the final coat shall be No 631 in accordance with SANS 1091 Light Grey. The conservators shall be finished with an outer coat of white. The protection requirement is specified in schedule A of an enquiry document.

4.1.14.3.5 Nuts and Bolts

All nuts and washers shall have stainless steel grade of 304.

All bolts shall have a stainless-steel grade of 316.

4.1.14.4 Tank construction

4.1.14.4.1 Shape

The shape of the transformer tank and fittings, including the under base shall be such that no water can be retained at any point on their external surfaces. Furthermore, the lid on the inside shall be shaped to ensure that all free gas generated inside the transformer escapes to the conservator by way of the gas and oil actuated relay.

4.1.14.4.2 Cooling corrugations

Corrugated tanks will not be accepted unless approved in writing.

4.1.14.4.3 Guides for core and winding assembly

Guides shall be provided inside the transformer tank to correctly locate the core and winding assembly in the tank.

4.1.14.5 Tank strength and oil tightness

4.1.14.5.1 Rigidity

Transformer tanks and their associated components shall have adequate mechanical strength and rigidity to permit the complete transformer, filled with oil, to be lifted, jacked and hauled in any direction, and to be transported without structural damage or impairment of the oil tightness of the transformer, and without the necessity for the special positioning of sliding rails in relation to the tank. Tank stiffeners shall not cover welded seams, to enable the repair of possible oil leaks. The tank and transformer as a whole shall be suitable for transport by low-bed or beam wagon.

4.1.14.5.2 Internal pressure and vacuum

Transformer tanks, complete with all fittings and attachments normally in contact with the transformer oil, and filled with oil of the specified viscosity, shall withstand the pressure and the leakage tests prescribed in 5. When empty of oil they shall withstand the vacuum test specified in 5. In the case of type tests for strength and oil tightness the fittings (e.g. pressure relief valves and bushing stems) may be tested separately. The ability of the tank to withstand overpressure shall be co-ordinated with the pressure relief valves (see 4.14.12).

4.1.14.6 Brackets for surge arresters

For three winding auto-transformers, the tertiary bushing protective surge arrester brackets (to be included in the contract) shall be appropriately spaced on the transformer tank, underneath the bushings, with 900 mm phase-to-phase clearance.

4.1.14.7 Magnetic flux effects

The tank and cover shall be designed so that local heating due to stray flux in any structural part shall not exceed the top oil temperature limit specified for the transformer, by more than 10 °C. Heating, due to stray flux, shall also not cause local temperature elevations of more than 15 °C relative to the oil temperature at that level. Thermometer pockets shall be located so as to avoid errors in temperature indication due to the heating effects resulting from stray flux.

4.1.14.8 Under Base

The under base shall be suitable for the movement of the transformer in any direction, by sliding on greased rails, and shall be provided with four hauling eyes not less than 50 mm in diameter, as near as possible to the extremities of the length and width of the tank with not less than 100 mm working clearance above them. Unless otherwise approved, transformer under bases shall have a thickness not less than that specified in table 11. Fabricated bases shall not retain water. The position of the axial and transverse centre lines as shown on the dimension and foundation drawings shall be accurately stamped onto the tank at the base level, on both sides and at both ends, and indicated by means of a red enamelled mark at each point.

Table 11 — Minimum thickness of transformer tank base plates — mild steel

Length of tank(m)	**Minimum plate thickness** (mm)
Fabricated bases	
not exceeding 2,5	10
exceeding 2,5	12
Flat bases	
not exceeding 2,5	12
over 2,5m but less than 5	20
over 5m but less than 7,5	26
exceeding 7,5	32

4.1.14.9 Jacking pads

Four suitably and symmetrically placed jacking pads shall be provided in positions that shall be accessible when the transformer is loaded on to the transport vehicle, except where jacking pads are used as transport pads on vehicles with built-in jacking. Each jacking pad shall be designed to support, with an adequate factor of safety at least half of the total mass of the transformer filled with oil, allowing maximum possible misalignment of the jacking force in relation to the centre of the working surface. Unless otherwise approved, the heights of the jacking pads above the bottom of the transformer base, and the unimpeded working surface of the jacking pads shall be as in table 12.

Table 12 — Jacking pad dimensions

Transformer mass complete with oil (metric tons)	60 and below	Above 60
Min/max height of jacking pad above base "A"(mm)	460/530	650/700
Overhang to centre of jacking pad "B"(mm)	115	150
Unimpeded working surface of pad "C"(mm)	170 x 170	210 x 210
Width of symmetrical unimpeded access to jacking pad "D"(mm)	230	300

4.1.14.10 Lifting lugs

Four symmetrically placed lifting lugs shall be provided so that it will be possible to lift the complete transformer when filled with oil without structural damage to any part of the transformer. The factor of safety at any one point shall not be less than 2. The lifting lugs shall be so arranged and located as to be accessible for use when the transformer is loaded on the transport vehicle, and so as not to cause fouling of any of the transformer fittings and accessories.

4.1.14.11 Centre of Gravity

Centre of gravity shall be clearly visible and indicated on all sides of the transformer tank.

4.1.14.12 Pressure relief devices

Transformers shall be equipped with one spring operated pressure relief device.

Each device shall:

a) maintain its oil tightness under a static oil pressure equal to the static operating head of oil plus 20 kPa;

b) attain its full opening in not more than 2.5 ms when subjected to an internal pressure impulse equal to the static operating head of oil plus 50 kPa;

c) be capable of withstanding full internal vacuum at sea level;

d) be fitted with a visual operation indicator plainly visible from ground level, and arranged for manual resetting;

e) be equipped with normally open contacts that may be used to give electrical indication that the device has operated (see 4.12.2.9); and

f) have an opening diameter of at least 100 mm.

Pressure relief devices shall be mounted so as not to entrap gases that may be generated or released inside the transformer. These devices shall be fitted directly to the side walls of the transformer tank at a level as near as possible to the top of the windings. Where one device is fitted it shall be positioned as close as possible to the centre phase.

Where there are two devices they shall be arranged on opposite sides of the transformer, i.e. between 'A' and 'B' phases on one side and between 'b' and 'c' phases on the other. Alternative mounting positions, such as on the tank cover, may be considered if adequate mechanical protection can be provided to avoid inadvertent damage by erecting personnel. This shall be subject to approval by the purchaser.

A combined weather guard and oil deflector shall be fitted to ensure free deflection of the oil towards the ground. Because pressure relief devices are recognized to have a limited action for severe internal faults, alternative well proven devices to only detect pressure waves resulting from internal faults but not giving any pressure relief, may be submitted for consideration by the purchaser.

Despite any testing requirements in this specification the overpressure device shall not be influenced to generate invalid trip signals by tank vibrations and the magnetic fields generated during normal operation and through faults.

4.1.14.13 Provisions for earthing

Provision shall be made for earthing the transformer and associated apparatus as follows:

4.1.14.13.1 Transformer tank earthing

At a height not less than 300 mm from the base of the transformer tank and near each end of each of the two major sides of the tank (i.e. in four positions). These provisions shall take the form of earthing pads integral with the tank walls; where the pads are attached by welding, such welding shall be continuous around the perimeter of the pads. Earthing pads shall be stainless steel. Provision shall be made for connection to the earthing pads of four copper earthing straps each 50 mm x 3 mm ,laid one upon another and clamped in position by a heavy clamping plate fastened by not less than two M16 studs or set screws with hexagonal heads and fitted with lock washers, spanning the width of the copper straps. The conductivity of these connections shall not be less than that of the connection provided at the neutral terminal of the transformer.

4.1.14.13.2 Transformer neutral(s) earthing (direct)

A stainless steel pad having the same clamping arrangement as the transformer earthing pads and integral to the transformer tank shall be provided for each transformer neutral terminal for earthing.

(a) This pad shall be mounted as near as possible to its corresponding neutral terminal in order to ensure a short and steady connection to earth.

(b) The conductivity of this connection which is to be made using two copper earthing straps of 50 mm^2 x3 mm each laid one upon the other shall not be less than that of the connection provided at the neutral terminal of the transformer.

4.1.14.13.3 Transformer surge arrester earthing (line and neutral surge arresters)

The surge arrester mounting brackets shall be used as the earth path for surge arrester discharging to earth via the transformer tank (i.e. copper earth tails shall not be used for surge arresters).

Where brackets for surge arresters are to be fixed to the tank using tank mounted bolts, stainless steel pads (similar to the transformer tank earthing pads that form

an integral part of the tank) shall be used. When these pads are attached by welding, they shall be welded continuously around the perimeter of the pads.

Where brackets are mounted onto radiators, a separate suitably rated corrosion protected connection shall be provided to the earthing pad on the tank.

NB Bolted down surface contact areas of transformer surge arrester support brackets and earthing pads shall be free of any paint or metal spray coatings.

All tank attached apparatus, including cable marshalling boxes, tap-changer operating gear and mechanism boxes, and fan motors shall be bonded to their supporting structures.

Earthing pads, as specified in 4.14.13, shall also be provided on each end of the supporting structures for all separately mounted cooler banks and oil conservators and on all free-standing cubicles.

4.1.14.14 Main tank covers

4.1.14.14.1 Shape

The main cover of the transformer tank may be flat, domed or of the “bell type”.

Positive provision shall be made to guide any gas that may be developed toward the Buchholz relay. This provision shall take into account the possible slopes of the plinth on which the transformer will be mounted. The effectiveness of guiding gas in the transformer shall be tested by injection of a known quantity of gas into bottom drain valve furthest away from the Buchholz relay.

In order to avoid the undesirable and possible dangerous entrapment of gas in the transformer, this test shall be carried out prior to the final vacuum treatment of the transformer oil.

4.1.14.14.2 Lifting

Lifting lugs or eyes shall be provided, and the cover so arranged that it may be lifted and handled without permanent distortion.

4.1.14.14.3 Support

The cover may be supported from, but shall not support, the core and winding assembly. (see 4.7.4.2).

4.1.14.14.4 Gas venting

The transformer cover, and generally the internal spaces of the transformer and all relevant oil connections, shall be designed to provide venting of any gas in any part of the transformer to the gas and oil actuated relay.

4.1.14.14.5 Cover identification

The main tank cover shall have indelibly stamped into its edge below the “C”-phase bushing, the maker’s serial number, which shall also similarly appear in the adjacent position on the edge of the main tank flange.

4.1.14.14.6 Thermometer pockets

A minimum of three thermometer pockets fitted with a captive flanged screw plug shall be provided, suitably positioned for use with a thermometer to verify top-oil and winding temperatures.

Thermometer pockets shall be located so as to avoid errors in temperature indication due to the heating effects resulting from stray flux.

4.1.14.14.7 Currents flowing in tank cover and bushing turrets

To allow for the effect of induced loop currents and capacitive surge currents, the tank cover and bushing turrets shall be fixed to the transformer in such a way that good electrical contact is maintained around the perimeter of the tank and turrets.

Special care shall be taken in the vicinity of high current terminals.

4.1.14.15 Welding of cover

Joints, other than those that may have to be separated during transport or for maintenance in service, shall be welded.

The main tank/cover joint shall be welded. A fire-proof gasket shall be included to prevent foreign matter entering the transformer during welding or un-welding. The welded joint shall be designed to permit removal of the weld with minimum damage to the mating flanges and to leave them suitable for re-welding.

4.1.14.16 Gaskets: Types, material, re-tightening and welding

4.1.14.16.1 General

a) All gasket joints shall be designed, manufactured and assembled to ensure long term leak and maintenance free operation.

b) Gasket joints that need not be removed for normal maintenance or transport shall be welded in accordance with 4.14.15.

All costs to maintain the system leak free shall be for the contractor’s account during the guarantee period.

Approved non O-ring gaskets that need re-tightening in order to avoid oil leaks as a result of shrinkage, shall be retightened in the second 6 months of service by the contractor at no extra cost to the purchaser. Gaskets and O-rings shall be replaced each time they are disturbed by opening.

All gasket joints except those specifically excluded below shall be of the O-ring and groove type. The O-rings shall be of Nitrile Rubber or better.

The joints that may be excluded from being O-ring types are:

Bolt-on type tap-changers and selector tanks that have to be removed for transport or maintenance. In these applications rectangular cord and groove joints where the nitrile rubber cord is not joined but passed twice around the perimeter with the loose ends at the bottom, are acceptable. Alternatively a flat nitrile rubber gasket with stoppers to prevent over compression will be acceptable.

4.1.14.16.2 Attachments to the transformer tank

Attachments to the transformer tank shall only be fixed by bolting them to the prepared flat surface of a flange facing, either integral with or welded to the tank and sealed by a gasket or O-ring to the mating flange of the attachment.

Joints dependent on the sealing of screw threads and direct welding of fittings to the tank will not be accepted.

4.1.14.16.3 Pipe joints

Oil pipes above 15 mm bore shall have flanged, gasket and bolted joints. Flexible compression joints will not be accepted unless specifically approved.

Joints dependent on the sealing of screw threads will not be accepted.

4.1.14.16.4 Drilling of pipe flanges

Except where otherwise stated, the drilling and bolting of pipe flanges and the mating flanges of fittings shall comply with BS 4504 or DIN 2631.

4.1.14.17 Access openings and covers

An appropriate number of suitably proportioned hand holes and manholes shall be provided for easy access to the upper portions of the core and windings assembly, the lower ends of bushings, internal current transformers and the oil side of their terminal boxes (see 4.8.4).

4.1.14.17.1 Handles

Manhole covers shall be provided with robust handles to facilitate their removal.

4.1.14.17.2 Lifting lugs

Covers with a mass greater than 25 kg shall be provided with symmetrically arranged lifting lugs.

4.1.15 Valves and oil sampling devices

4.1.15.1 Isolating valves

Suitably dimensioned isolating valves shall be provided:

a) at each point of connection to detachable cooling apparatus; and

b) at each point of connection to tap-changer compartments, cable disconnecting chambers and cable sealing boxes supplied from the transformer tank.

4.1.15.2 Filtering and drain valves

Not less than two 50 mm double-flange valves shall be provided. Where only two filtering valves are provided, one valve shall be located at the top of the tank adjacent to the oil conservator, and another at the bottom of the tank on the opposite end to give a cross current of oil during filtration (see 4.16.7).The lower valve shall be a combined drain and filtering valve and, as such, shall be positioned so that it drains, as far as possible, all the oil from the transformer tank.

No valves shall be fitted by means of stud welding or welding to the main tank.

The tap-changer diverter chambers shall be fitted with 25 mm drain valves for maintenance purposes. If inaccessible from ground level, they shall be piped down to 1,5 m above ground level.

4.1.15.3 Oil sampling devices

An oil sampling device consisting of a flange and drain plug or other approved device shall be provided in the following locations where applicable:

a) at the bottom of the transformer tank, bolted and gasket to the free flange of the 50 mm drain valve specified in 4.15.2;

b) at the bottom of each separate tap-changer selector compartment;

c) in the pipe running between the transformer and the radiator to allow an oil sample to be taken from the main oil flow path;

d) at the free flange of the main and diverter conservator drain valve;

e) on the free flange of the tap-changer diverter chamber; and

f) at the end of the main Buchholz relay sample pipe.

These points shall all be numbered on the sampling point with the number corresponding to the same point on the valve function plate (see 4.15.8).

4.1.15.4 Strength and oil tightness

Valves and oil sampling devices shall be of adequate strength to withstand the hydraulic and mechanical loads imposed upon them during testing, processing and transporting of the transformer and in service. Pewter and similar low strength materials will not be accepted. Valve discs, wedges, wedge facing rings, seats and seat rings, stems and spindles shall be of approved non-corrosive material. Valves and oil sampling devices shall withstand the tests specified in 5.

4.1.15.5 Valve stem seals

Valve stem seals shall be capable of adjustment in service without draining the transformer oil. In this connection, and generally, aluminium (or aluminium alloy) threads shall not mate with threads of brass valve stems.

4.1.15.6 Padlocking

Suitable means shall be provided for padlocking valves in both the open and closed positions.

4.1.15.7 Blanking plates

All valve entries communicating with the atmosphere shall be sealed using bolted and gasket blanking plates, or captive screwed caps, or plugs as the case may be.

4.1.15.8 Valve function plate

A schematic diagram plate indicating all valves, vent plugs and sampling points shall be provided in the same manner as the rating and diagram plate (see 4.25) indicating the position of each, the total number, the function and the required position during operation.

4.1.15.9 Valve position indication

The position of each valve, i.e. fully open or fully closed, shall be clearly and unambiguously visible on inspection. Where this is not so, e.g. in the case of lever operated valves, the “open” and “closed” positions of the lever in relation to a clearly recognizable part of the transformer shall be depicted on the valve function plate specified in 4.15.8.

4.1.15.10 Labelling of oil sampling devices

All the oil sampling points, as specified in 4.15.3, shall be numbered the same as on the valve function plate with exception of the two routine sampling points that shall also be labelled as follows:

Sampling point	Label
Buchholz relay (Main 1)	Transformer oil Routine sampling point
Diverter conservator	Tap-changer diverter oil drain valve Routine sampling point

4.1.16 Oil conservator tank and connections

4.1.16.1 Capacity

The capacity of the oil conservator shall be such that the oil level will not fall below the top of the feed pipe to the transformer at a top oil temperature of –10 °C and shall, as a minimum, not overflow at a top oil temperature of 115 °C. Note also the requirements for the sump in 4.16.4.The transformer shall nevertheless also be able to carry the overloads specified without overflowing.

4.1.16.2 Strength

The conservator shall be designed and tested to meet the requirements of 4.14.5.

4.1.16.3 Mounting

Oil conservators shall be mounted on the transformer tank. Conservators shall be bolted on brackets to facilitate the complete removal of the conservator for whatever purpose. The oil conservator shall fall in the direction of its main compartment drain valve by not less than 25 mm over the length of the conservator.

4.1.16.4 Sump

The connection to the transformer shall be positioned so that a level of oil not less than 10 % of the internal vertical dimension of the conservator with a minimum of 50 mm in the case of transformers with ratings up to and including 20 MVA and 75 mm for larger units, remains in the conservator after it has been drained to the transformer. The conservator shall not have pockets that are not drained by the drain valve.

4.1.16.5 Removable end cover

The end cover of the conservator adjacent to the drain valve shall be attached by a bolted and gasket external flange to facilitate internal cleaning of the conservator. In the case of a conservator that is partitioned to supply the tap-changer switch compartment(s), both end covers shall be removable. These covers shall be provided with integral lifting lugs. The removal of these covers shall not be obstructed by pipe work or fittings when the transformer is erected as in service.

4.1.16.6 Filling aperture

A filling aperture not less than 65 mm diameter, which is fitted with an air tight gasket cover, shall be provided at the top of each conservator.

4.1.16.7 Isolating/drain valves

a) A suitably dimensioned isolating valve shall be attached direct to the outlet of each oil conservator by a bolted and gasket flange.

b) A 50 mm double-flanged valve shall be provided to fully drain each main tank conservator. This valve shall be mounted, on an extension pipe where necessary, approximately 1,5 m above ground level.

c) A 25 mm double-flanged drain valve shall be provided to fully drain each tap-changer oil conservator.

d) Valves, flanges and flange facings shall comply with the relevant requirements of 4.15.

4.1.16.8 Pipe work connections

Pipe work connections shall be the correct size for their duty and shall be as short and direct as possible. Only radiused elbows shall be used. Pipe work shall not obstruct the removal of tap-changers for maintenance. The feed pipe to the transformer tank shall enter the transformer cover plate at its highest point and shall be straight for a distance not less than five times its internal diameter on the transformer side of the Buchholz relay, and straight for not less than three times its internal diameter on the conservator side of the relay. This pipe shall rise toward the oil conservator, through the relay, at an angle of not less than 5°. The feed pipe diameter shall be not less than 75 mm.

Gas-venting pipes, as referred to in 4.14.14.4, shall be connected to the final rising pipe to the Buchholz relay as nearly as possible in an axial direction, and preferably not less than five pipe diameters from the relay, on the transformer side of the relay.

4.1.16.9 Sealed oil preservation system

Transformers shall be equipped with a bagged main conservator. The bag or system shall not prevent or restrict the normal draining of the conservator or the flow of oil to the transformer. The bag shall allow expansion without increasing the pressure or creating a partial vacuum over the full specified temperature range. The system shall be air tight.

The materials, design and construction shall be subject to approval by the purchaser. Note that the design and materials shall take the long life expectancy of the transformer into account.

High and low oil level alarm contacts shall be provided together with the oil level indication. The oil filling aperture shall be clearly marked to prevent oil filling into the bag.

The rating and diagram plate shall bear a warning statement that the conservator is fitted with a bag.

The transformer manual shall give clear instructions on the operation, maintenance, testing and replacement of the bag.

4.1.17 Gas and oil actuated relays (Buchholz)

An approved gas and oil actuated relay suitable for operation in transformer oil as specified over the temperature range from 115 °C to –10 °C, shall be interposed in the connecting pipe between the oil conservator and the transformer tank in such a manner that all gas from the tank must pass through the relay as it rises to the oil conservator.

Contacts as specified in 4.12.2.9 shall be provided to close as follows:

a) the gas alarm signalling contacts shall be closed by the oil level falling to a predetermined point in the relay due, either to the deficiency of oil, or to the presence of gas in the relay;

b) the gas tripping contacts shall close on a further lowering of the oil level to a point before the gas escapes to the conservator. If this cannot be achieved the gas alarm signal shall be used for a gas trip signal in which case this arrangement shall be subject to approval by the purchaser;

c) the surge tripping contact shall close when there is a surge of oil through the relay towards the conservator with a rate of flow not less than that stated in table 13.

Table 13 — Gas and oil actuated relays oil flow rates for closure of surge contacts

Transformer total oil content (l)	**Relay nominal size** (mm)	**Limits of minimum steady oil flow rate** (mm/s)
10 001 to 50 000	75	Between 900 and 1 600
Above 50 000	75	Between 1 500 and 2 500

The performance of the relay shall be demonstrated as specified in section 5. Gas and oil actuated relay tests (Type and Routine Test).

4.1.17.1 Relay stability

In addition to the tests specified in section 5, the relay shall withstand the contact tests specified in section 5.

4.1.17.2 Magnetic influence

Despite the testing requirements of this specification, the relay shall not operate for through fault conditions or be influenced by the magnetic fields around the transformer under normal or external fault conditions.

4.1.17.3 Mounting and marking of relays

Preference will be given to relays that are, interchangeable (see 4.16.8). Each relay shall bear clear indication as to which is the conservator end.

4.1.17.4 Windows

Unless otherwise approved, two graduated windows shall be provided in opposing sides of the relay and so arranged that the oil level in the relay may be clearly gauged. The internal surfaces of the relay shall be finished in glossy white, oil resistant enamel.

4.1.17.5 Gas release and oil sampling cock

An oil tight gas release cock, terminated in a threaded (6 mm) air connection fitted with a captive screw cap, and communicating by a small bore non-ferrous tube to the top of the relay body, shall be located approximately 1,5 m above ground level. The tubing shall be protected against physical damage by appropriate routing, fastening and/or protective conduit.

4.1.17.6 In-situ testing

Each Buchholz relay shall have an internal test nozzle for simulating the gas alarm, gas trip and surge trip signals by injecting gas into this nozzle. The nozzle shall be piped down to a height of 1,5 m above ground level in the same manner as the gas release cock specified in 4.17.5.

Alternatively, an approved mechanical device that operates the float mechanism and not just the switch contacts may be provided.

4.1.17.7 Oil tightness and strength

The relay shall withstand the internal pressure and vacuum conditions specified in 4.14.5.2 without damage and without leakage of oil, either externally or into its terminal box, and, in the case of the application of vacuum, without ingress of air.

4.1.17.8 Electrical connections, terminals and terminal box

In general, these shall comply with the requirements of 4.13. The gauze covered drain and vent hole in the terminal box on the relay (see 4.13.2.2) is, however, not required.

The terminal box cover gasket shall be confined to the perimeter of the cover where sealing is required, i.e. the central area of gasket material over the terminals shall be removed.

A suitable water-tight and weather resistant electrical conduit threaded cable entry shall be provided.

The alarm signalling and the tripping contacts shall be electrically separate and independent, and shall be externally connected as specified in 4.13.3.6.

4.1.17.9 Devices for the protection of relay contacts

Where the contractor deems it necessary to protect the relay contacts (see 4.12.2.9) from the effects of cable capacitance or electromagnetic relay inductance by means of inductors or diodes, he shall provide and fit these items, preferably in the relay terminal box, or alternatively in the marshalling box on the transformer. Such designs shall be subject to the purchaser's approval.

4.1.17.10 Type and routine testing

The Buchholz relays shall meet the requirements of the tests specified in section 5. A standard test card bearing the manufacturers serial number for the relay shall be included with each of the operating instruction manuals supplied for each transformer.

4.1.17.11 Assembly, operating and maintenance instructions

Original and fully detailed instructions for assembly, operation and maintenance of the relay shall be included with each of the operating instruction manuals for the transformer.

4.1.17.12 Floats

The buoyancy of the floating elements shall be due to their specific gravity and shall not depend on the sealing of a hollow float. The materials shall not be affected by the normal operating temperature range of the transformer oil.

4.1.18 Dehydrating breathers

4.1.18.1 General

With the exception of oil-filled bushings and bushing mounted, tap-changer diverter switch compartments operating at line or tapping potential, the oil in conservators and other oil-filled compartments shall only be in contact with the atmosphere through a dehydrating breather approved by the purchaser.

No single breather shall carry a silica gel charge in excess of 12.5 kg. Where the required quantity exceeds this mass it shall be subdivided into a sufficient number of individual compartments arranged in series. A single atmospheric oil seal shall be provided to serve the entire breather group. The breather shall be carefully designed for easy and frequent changing of the silica gel charge by non-specialist maintenance personnel.

4.1.18.2 Type of breather

Unless otherwise approved, a desiccating breather using cobalt impregnated silica gel, complying with BS 3523, shall be provided.

4.1.18.3 Breather proportions

The silica gel charges contained in the dehydrating breathers shall not be less than 0.3 kg per 1 000 l of total oil content, with a minimum of 2 kg.

4.1.18.4 Diffusion of air through the desiccant

The silica gel charge shall be so supported and positioned that the air passing through the charge shall be diffused throughout the charge so as to contact all gel particles in the charge and, in particular, those that can be seen from the outside or through the window provided for this purpose.

4.1.18.5 Containing of the silica gel charge

The silica gel charge shall preferably be contained in a transparent and independent container of weatherproof, UV and heat resistant (up to 115 °C) material that may be simply and easily removed and replaced without the use of special tools. In the case of multi-unit breathers each separate charge shall be independently retained upon removal of the oil seal.

4.1.18.6 Visual inspection of the desiccant

Unless the container for the silica gel charge is transparent an inspection window, at least 50 mm wide, shall be provided to allow inspection of the colour and condition of the silica gel. The inspection window shall be positioned to make the desiccant visible at both ends and for the full length of each cartridge. Windows or containers of heat-resistant glass or other fragile material shall be protected using metal grids.

4.1.18.7 Seals

The breather desiccant shall not be in contact with the atmosphere unless the transformer is breathing but shall be sealed by a device containing a quantity of transformer oil. The designed oil level in this device shall be clearly marked. The seal shall preferably be constructed of heat-resistant glass. All other seals on the breather shall be affected using oil-proof and airtight gaskets that shall be effectively retained when dismantling the breather for the purpose of changing the desiccant charge.

4.1.18.8 Castings

Where cast components are used they shall be high quality, non-porous castings.

4.1.18.9 Corrosion proofing

Corrosion shall be eliminated by the use, wherever possible, of non-corrodible materials, and by avoiding the contact of dissimilar metals. The corrosion proofing shall be in accordance with 4.14.3.

4.1.18.10 Mounting and pipe work connections

Dehydrating breathers shall be mounted approximately 1,5 m above ground level. Connection shall be made to a point in the oil conservator not less than 50 mm above the maximum working oil level (i.e. top oil temperature 115 °C), by means of a pipe with a minimum diameter of 20 mm in the case of breathers less than 10 kg in total mass, and a minimum diameter of 25 mm for units of 10 kg and above.

Breathers with a mass less than 10 kg may be supported by the connecting pipe, whereas units of 10 kg and above shall be supported independently of the connecting pipe. Connecting pipes shall be securely cleated to the transformer, or other structure supplied by the contractor, in such a manner as to eliminate undesirable vibration and noise.

In the case where a breather of less than 10 kg is supported by the pipe, there shall be a cleat directly above the breather flange. Pipe connections shall comply with 4.14.16 unless otherwise approved.

4.1.19 Oil level indicators, alarm and signalling devices

4.1.19.1 General

The oil level in conservators and oil-filled chambers with a free oil level, shall be clearly indicated when viewed from ground level by approved weatherproof oil level indicators. The indicators shall be suitable for the design, i.e. free breathing or bag type conservators.

4.1.19.2 Range of indication

The oil level indication shall be continuous over the range of top oil temperature from –10 °C to +115 °C. The level of oil in the conservator corresponding with the -10 °C index shall be not less than 25 mm above the transformer feed pipe entry.

4.1.19.3 Graduation of indicator

The oil level indicator on the oil conservator connected to the transformer tank shall bear the following markings:

If the indicator is the dial-type, the words “FULL” and “EMPTY”, shall be appropriately placed. (Dial type indicator pointers shall move from “Empty” to “Full” in the clockwise direction). Graduations indicating the normal oil levels at oil temperatures of 15 °C, 30 °C, 45 °C, 60 °C, 75 °C and 90 °C.

4.1.19.4 Dial-type indicator

These shall be the magnetically operated type in which breaking the glass will not expose the oil to the atmosphere. The buoyancy of the floating element shall be due to its relative density and shall not depend on the sealing of a hollow float. The materials used shall be unaffected by the hot transformer oil in the long term.

The vibration of the transformer shall not produce wear and damage to the mechanism of the indicator.

4.1.19.5 Gaskets

Gaskets shall be as specified in 4.14.5.

4.1.19.6 Mounting

Oil level indicators shall be arranged for front-end mounting without requiring access to the inside of the oil conservator or chamber.

4.1.19.7 Low- and high-level alarms

Transformers will have low- and high-level alarm contacts fitted; these contacts are to be paralleled.

A pair of circuit-closing, potential free, low oil level alarm signalling contacts shall be provided in each oil conservator. These contacts shall be set to close at the -10 °C point.

A pair of circuit-closing, potential free, high oil level alarm signalling contacts shall be provided in each oil conservator. These contacts shall be set to close before the oil is pushed into the breather pipe (see 4.18.10).

Contacts shall comply with the requirements of 4.12.2.9.

4.1.20 Cooling arrangements

4.1.20.1 Type of cooling required and ONAN rating

ONAN/ONAF Cooling arrangements shall be provided for the transformers.

4.1.20.2 Hot oil connection point

Hot oil to the transformer oil cooling apparatus shall be drawn off, as far as practicable, from the highest point in the transformer tank to eliminate stagnant oil volumes below the cover-plate.

4.1.20.3 Electrostatic charging tendency (ECT)

The manufacturer shall guarantee that the transformer will be free of any deleterious electrostatic charging tendency throughout its life, under all operating conditions and in particular with all cooling and oil circulation systems simultaneously in operation. The Employer will not accept any restrictions on the maximum number of cooling systems that may be operated simultaneously, irrespective of the cooling demand. Furthermore, the Employer will not accept any restrictions in the type of oil that may be used in the transformer.

The manufacturer shall submit evidence or tests to prove that there is no electrostatic charging tendency in the design of his transformers.

4.1.20.4 Oil temperature measurement and settings

4.1.20.4.1 General Requirements

One or more digital-type thermometers, fully compensated for the effects of ambient temperature, shall be provided, catering for the measurement of the transformer “top-oil” temperature and the winding hot-spot temperature. Where possible, the oil and winding temperature measurements may be effected by a single instrument.

The device/s shall include mass storage of a complete database of all oil and winding temperature readings with an internal data RAM capable of storing 6 months of half hourly data. The database shall not be lost in the event of a loss of auxiliary supply to the instrument.

The instrument/s shall be rail mounted within the marshalling interface box. The instrument/s shall employ PT100 sensors for temperature measurement in accordance with IEC751.

The device/s shall include the following features:

- Serial interface utilising RS485 and supporting the DNP3.0 Level 2 networking protocol. Where more than one device is installed, the RS485 port of each device shall be “daisy chained” to the other devices.
- An RS232 serial interface of local communication to a personal computer.
- An analogue output signal in the range of 4 – 20Ma for each oil/winding measurement. The 4 to 20Ma output range shall correspond to -20 °C to +140 °C. Accuracy shall be 0.5% of full range or better.
- Windows based software.
- Self diagnostic functions, including a normally-open watchdog contact. The watchdog shall be opened in the event of a loss of auxiliary supply to the device, an internal device failure, or for a defective temperature sensor.
- Dual rated auxiliary supply of 110Vdc and 220Vdc. The latter requirement may be achieved using a suitable dropping resistor together with the 110Vdc device.
- The device enclosure shall be rated to IP53 or higher in accordance with IEC 60529.

4.1.20.4.2 Oil temperature measurement

This instrument shall provide local and remote indication of the transformer “top-oil” temperature. A typical overall measurement accuracy of 1°C is expected.

The instrument shall record the maximum oil temperature in a given time period, arranged for manual resetting, and with one alarm signalling and one tripping contact as specified in 4.12.2.9, that can be manually set to close at predetermined temperatures which, unless otherwise specified, shall be:

Alarm — 95 °C Trip — 105 °C

The oil temperature instrument shall include a suitable hysteresis characteristic so as to avoid hunting/output contact jitter.

Terminals shall be provided in the marshalling box or, where provided, the cooler controller cabinet for checking the output of the current transformer and/or the functioning of the heater coil by means of an external supply.

4.1.20.4.3 Winding temperature measurement and settings

A digital-type winding temperature thermometer, fully compensated for the effects of ambient temperature, shall be provided and shall have a load-temperature characteristic approximately the same as the hottest part of the windings. The current transformer/s for operating the thermometer/s shall be built into the main transformer tank and shall be located to reflect the maximum hot-spot temperature of the respective windings.

This device shall provide local and remote indication of transformer winding temperature.

The hot spot temperature and transformer lifetime shall be calculated in accordance with IEC 60354.The device shall cater for programmable rated gradient, load current exponent and winding constant for up to 4 cooling groups. A device using the calculation methods of IEC 60076-7 shall be used in preference to one using the IEC 60351 methods once such devices, acceptable to Eskom, become commercially available.

A separate winding temperature calculation shall be made for each loaded winding of the transformer, except in the case of two-winding transformers which shall be use a single winding temperature calculation arranged to provide a thermal image of the maximum overall winding hottest-spot.

The instrument shall record the maximum winding temperature in each time period, arranged for manual resetting, and with alarm signalling and tripping contacts. An alarm contact, that can be set to close at a predetermined temperature, shall be provided in addition to a contact to be used for tripping purposes. Alarm and tripping contacts shall comply with the requirements of 4.12.2.9. The alarm contact circuits of all winding temperature measuring instruments shall be paralleled, and the trip contact circuits paralleled and each brought out to a pair of terminals. Unless otherwise specified, the alarm and trip settings shall be:

Alarm — 110 °C

Trip — 120 °C

Where supplementary forced cooling is provided, an additional pair of contacts, or an additional thermal or auxiliary relay shall be provided to automatically start the oil pump and/or fans for cooling the transformer. These contacts shall be self-resetting. Alternatively, the start signal may be derived from a current relay. The winding temperature instruments shall include suitable hysteresis characteristics to avoid hunting/output contact jitter.

Terminals shall be provided in the marshalling box or, where provided, the cooler controller cabinet for checking the output of the current transformer and/or the functioning of the heater coil by means of an external supply.

4.1.20.5 Construction details

The requirements of 4.14 shall, wherever they are relevant, apply equally to the cooling apparatus provided for the transformer.

Pipework and coolers shall be arranged to permit free access to oil conservators, tapping mechanism boxes, terminal and marshalling boxes and any items requiring inspection or maintenance in service.

In order to facilitate painting of non-detachable (non-galvanized) cooler tubes on site, a minimum of 80 mm shall be allowed between adjacent tubes and between these and the transformer tank.

All joints between tubes and the header shall be welded outside the header to reduce the possibility of corrosion in the seams.

4.1.20.6 Detachable radiators

Detachable radiators shall be provided with:

a) lifting lugs,

b) drain valves or plugs, at the lowest points,

c) vent plugs, at the highest points, and

d) flanged and bolted isolating valves at both points of attachment to the transformer tank or cooler bank.

4.1.20.7 Radiator corrosion protection

Radiators shall be galvanized, where radiator tubes of 1.6mm thick walls are used, and the mean coating thickness of hot dip galvanising is at least 100 microns to SANS 121 ISO 1461, then preferably flow coated to the approval of the Engineer.

4.1.20.8 Separately mounted cooler banks

Drawings shall indicate the maximum overall dimensions of the transformers including separate cooler banks.

It shall be assumed that separately mounted cooler banks will be mounted on separate plinths from the transformer tank and that the maximum relative movement between these plinths will not exceed 10 mm.

Expansion couplings, used in connection pipework between transformers and separate cooler banks, shall be subject to the purchaser's approval (see 4.23).

The arrangement of the cooler banks shall comply with 4.6 and the earthing provisions shall comply with 4.14.13.

A filtration valve (see 4.15.2) shall be provided at the top and bottom of each separately mounted cooler bank.

Thermometer pockets to take pencil-type mercury-in-glass check thermometers shall be provided on the top and bottom headers of each cooler bank.

4.1.20.9 Forced cooling (AF)

4.1.20.9.1 Cooler control and settings

Forced cooling equipment for system transformers shall be designed for automatic operation by a winding temperature thermometer or current level contacts set at predetermined temperatures/currents.

Generally the manufacturer's standard settings for the starting of fans shall be used, otherwise a setting of 65 °C or 0.6pu current shall apply.

The cooler switches shall be suitably labelled.

4.1.20.9.2 Cooler control equipment

All the necessary automatic control, motor contactors, protective devices, and switches for the forced cooling equipment shall be housed in a, IP55 rated cabinet. This cabinet shall be mounted on the transformer tank using approved anti-vibration mountings on the transformer tank. Hinged door(s), handle(s),

locking facilities, a separately fused 230 V single-phase heater and switch, and a separately fused lamp with door switch shall be provided.

The heater shall be rated and located so that none of the apparatus in the cabinet will suffer damage due to prolonged operation of the heater at high ambient temperatures.

Tap-changer control equipment may also be housed in this cabinet.

4.1.20.9.3 The cooler control equipment shall include:

(a) an isolating switch rated to carry and break full-load current for each group of fan motors;

(b) a “manual”/”auto” change-over switch;

(c) a magnetic contactor for each group of fan motors. Contactor coil leads shall be wired to the terminal board. A set of normally open contacts shall be provided to initiate an alarm circuit if the contactor is tripped by its overload element. All such contacts of the various groups shall be paralleled and wired to a pair of terminals in the control cabinet.

Magnetic contactors shall maintain supply to motors at supply voltage down to 0,85pu of the rated supply voltage at their terminals. Tripping shall only occur on a controlled basis and there shall be automatic restarting in the staggered mode if the voltage recovers while the transformer is in service; and

(d) provision for disconnection of all cooling fans on the closure of a pair of contacts provided by the Employer on the master tripping relay controlling the isolation of the transformer on the occurrence of a fault.

The ratings of these contacts will be:

i) Make and carry continuously : 1250W at maxima of 5 A and 660V.

ii) Make and carry for 0,5 s : 7500W at maxima of 30 A and 660V.

iii) Break : 100W resistive

iv) 50W inductive : as defined in BS 142: Table 13, i.e. L/R = 40 ms.

The arrangement for disconnection of the fans shall not be self-resetting.

The cooler failure relay is to monitor all three phases and the cooler supply failure alarm to have a 4 s to 10 s timer fitted to prevent unnecessary signalling.

A change-over relay shall be provided in the control scheme. A contact of the trip relay, on the purchaser's protection panels will energize the operating coil of this change-over relay which in turn shall isolate the contactor control circuits. A reset push button shall be provided in the marshalling kiosk for resetting the change-over relay. The operating coil of the relay shall be continuously rated, or a make contact of it shall be wired in series with the operating coil and a break contact in series with the reset coil (see figure 19).

Where a contractor is supplied for this purpose, the operating coil shall be suitable for operation by way of the above-mentioned contacts and shall operate and reset correctly between 80 % and 120 % of the d.c. auxiliary supply voltage specified in schedule A of an enquiry document. The contactor shall have one set of normally closed contacts, which shall isolate the fan motor control circuit(s). An N/O contact is to be provided for alarming purposes.

Contactors shall comply with the provisions of IEC 60947:

- for staggering the starting times of fans or of individual groups of fans as required;

- for overload and single-phasing relays;

- for winding temperature and oil-temperature indicators, that shall be visible through a window in the door of the cabinet if installed in the same cabinet;

- for links for testing winding temperature relay, and interposing current transformer;

- for fuses, links and terminal boards (see 4.13) to make a complete assembly; and

- for labelling of all apparatus, that shall be inscribed indelibly in black lettering on a white background and that will not discolour in long term service.

4.1.20.9.4 Fans

Fans and fan-motors shall not require concrete foundations.

Fan blades and fan ducting shall be of aluminium alloy, stainless steel, and galvanized steel or other corrosion-resistant material and shall be designed to keep noise and vibration to a minimum. All fans shall be provided with galvanized wire-mesh guards. The rotation and air flow directions shall be clearly and indelibly indicated by appropriate arrows.

4.1.20.9.5 Motors

All motors shall be suitable for direct starting and continuous running from the 400 V supply voltage. Three-phase motors are preferred but single-phase motors of 0.5Kw and less will be acceptable.

All motors shall comply at least with IEC 60034 and shall be of the totally enclosed weather-proof type.

Three-phase motors shall be of the single-cage squirrel cage type. Bearings of all motors shall be of the ball or roller bearing type. The bearings shall be grease lubricated. Each motor shall be equipped with a terminal box arranged to accommodate the incoming cable provided by the contractor (see 4.14). If necessary, a suitable cable box shall be provided to terminate the cable.

Motors shall be provided with starters, overload protection (three-phase where applicable) and, in the case of three-phase motors, single-phasing protection.

All motors shall be labelled indicating kW and Amp ratings.

4.1.20.9.6 Maintenance

Fans motors shall be installed to facilitate their easy removal in the event of failure. Although very low maintenance is desired, lubrication and servicing instructions, if required, shall be clearly stated in the transformer manual. If deemed necessary by the purchaser, labelling shall be provided at each fan.

4.1.21 Quality and design review requirements

4.1.21.1 Quality

The Employer reserves the right to inspect manufacturers' and subcontractors' works and processes at any stage after receiving tenders to assess the manufacturer's capabilities and the quality of his products and processes. In addition, the overall quality assurance requirements of ISO 9001 shall apply as appropriate.

4.1.21.2 Design review

Design reviews will be conducted by the Employer or an appointed consultant at different stages of the procurement process for transformers. The first stage will be after tender closure as part of the technical adjudication of the tenders. The information given in schedule B of a tender will be reviewed. Visits to the manufacturer's works to inspect design, manufacture and test facilities may also take place.

During this stage the tenderer will have the opportunity to ensure that the specification has been interpreted correctly. The second stage will commence after order placement, but before manufacture commences. The manufacturer shall conduct design reviews at all critical stages of the design and submit findings of these reviews to the purchaser. These reviews will be more detailed and related to the specific design of the transformer on order. For this stage the design control element of ISO 9001 shall apply. The scope of such a review shall include the following:

(a). Core design
(b). Winding and tapping design
(c). Thermal design
(d). Insulation co-ordination
(e). Tank and auxiliaries
- Bushings
- Tap-changers
- Protective devices
- Oil preservation system

(f). Corrosion protection
(g). Processing and assembly
(h). Testing
(i). Sensitivity of specified parameters
(j). Short-circuit withstand capability
(k). Transient withstand capability
(l). Noise
(m). Overload capability
(n). Operation capability beyond nameplate specification
(o). RAM (Reliability, availability and maintainability)

4.1.22 Drawings and manuals

4.1.22.1 Contract drawings

Drawings shall comply with SABS 0111-1, and shall be submitted in duplicate for approval.

Drawing sizes required are indicated in brackets below.

The contractor shall supply the following drawings with his tender. When the electronic copies (DXF or DGN files) of manufacturer's standard drawings are supplied, they shall bear the purchaser's drawing number and the purchaser's order or contract number.

The following drawings shall be supplied:

a) preliminary outline and general arrangement drawing, including foundation details (A2);

b) details of the tank base and jacking points to permit the design of plinth and off-loading facilities (A3);

c) diagrammatic arrangement of windings and tapping's;

d) sectional drawings of core and windings which shall clearly indicate the methods of coil clamping;

e) drawings of on-load tap-changers or off-circuit tapping switches;

f) schematic and wiring diagrams for on-load tap-changer circuits, including a

diagram of the complete timing cycle for the tap-changer giving (A2):

i) Time in sec for normal tap-changer operation stepping in:

- raise direction after previous raise; and
- lower direction after previous raise.

ii) Time in s for tap-changer operation where a transition step is involved when stepping in:

- raise direction after previous raise; and
- lower direction after previous raise.

The schematic drawing shall include:

iii) motor power and control circuits;

iv) tap position indicator circuit: and

v) location of each item of equipment either by means of suitable terminal marking or legend.

g) schematic and, if applicable, wiring, drawings for cooler control circuits (A2);

h) final outline and general arrangement (A2);

j) shipping and transport drawings (A2);

k) rating and diagram plates (A3);

l) outline, mounting and constructional details of marshalling boxes and control cubicles (A2);

m) cabling drawings for fan motor and on-load tap-changer control circuits (A2);

n) manufacturing drawings for all transport blanking plates; and

p) outline drawings of bushings.

The same device references shall be used on schematic, wiring and cabling drawings.

4.1.22.2 Instruction manuals

Four copies of approved instruction manuals shall be supplied for each transformer. The manuals shall be complete with all approved drawings that shall be sufficient to enable the equipment to be assembled, checked and overhauled.

Only original documentation, especially from sub suppliers, shall be provided.

A complete set of all drawings submitted during the contracting stage shall also be included in the manual (i.e. a) to p) of 4.22.1).

Each manual shall bear on the front cover the:

a) the substation name;

b) the order number;

c) the manufacturer's serial number; and

d) the rating and ratio.

The following information shall be included:

a) a completed copy of the purchaser's order specification (schedules A and B);

b) the checking and erection procedures at site;

c) the mechanical operation of tap-changers and cooling apparatus;

d) the electrical control of tap-changers, fan motors etc.;

e) the assembly, adjustment and routine maintenance procedures for on-load tap-changers and cooling apparatus;

f) drawings of tap-changer circuit diagrams;

g) drawings of oil-filled bushings and outlines of HV, MV, and neutral bushings;

h) full details for the calibration of winding temperature thermometers;

j) a set of A-5 size colour photographs of the specific transformer completely assembled showing all details on the sides and the top;

k) the setting and testing of winding temperature and oil temperature, thermometers and gas and oil actuated relays;

l) the serial number of the transformer unit;

m) details of permissible vacuum and site processing (drying-out procedures);

n) a copy of the certificates of all tests carried out by the manufacturer, including the results of winding and core insulation resistance tests;

p) an internal arrangement of the core and windings, showing lead supports and winding clamping arrangements;

q) details of core and core clamping;

r) a sectional arrangement drawing of the windings showing sufficient details of the conductors and insulation for local maintenance purposes; and

s) a list of manufacturers recommended spares for normal maintenance purposes.

The manual shall be designed from a user's point of view. It shall be organized in a logical sequence and all maintenance instructions shall additionally be collected from the relevant subsections and presented in a simplified/summarized format for the transformer as a complete unit, while maintaining reference to subsections that may contain more details.

These instructions shall refer to specific maintenance time periods, e.g. 3 months, 6 months, 12 months, 3 years, 6 years, etc., for the life of the unit. Specific attention shall be paid to bushing installation, transport, tap-changer maintenance, oil processing and site tests.

4.1.23 Component approvals

The components and fittings associated with transformers covered by this specification shall be subject to the purchaser's approval. Samples, technical literature, drawings, tests reports and lists of the names of the principal users, with experience gained, shall be supplied on request.

The contractor shall submit components for approval to the Employer only after these have already been approved by the contractor himself for use on the transformer.

The Employer has a preference for standardized and approved components already used by him in order to minimize spares.

4.1.24 Condition monitoring / assessment equipment

4.1.24.1 Provision for installation

The transformer shall be designed to accommodate the installation or retrofitting of modern on-line condition monitoring equipment. Unless specified the transformer manufacturer shall propose monitoring equipment and detailed constructional designs for approval suitable for his design of transformer and he shall provide for the facilities and fittings for optimum interfacing, installation or retrofitting of such monitors.

On-line gas monitoring connected into remote indication or alarm facilities, is of particular interest.

4.1.25 Rating and diagram plates

4.1.25.1 General

Rating and diagram plates shall comply with the requirements of IEC 60076 except where otherwise stated in this specification.

4.1.25.2 Materials and methods of marking

Rating and diagram plates shall be of stainless steel not less than 1.2 mm in thickness. The required information shall be engraved on the plate and the engraving filled with glossy black, baked enamel. Other arrangements shall be specifically approved.

4.1.25.3 Mounting

The rating and diagram plates shall be mounted on a purpose made backing plate, finished in accordance with 4.14.3 situated in an accessible position not more than 1.5 m above ground level, and secured by stainless steel screws.

4.1.25.4 Information to be displayed

The information to be displayed on the rating and diagram plate shall be in accordance with the requirements of IEC 60076 with addition of the following:

a) the tapping current values (see 4.2.2) shall be shown for HV and MV terminals for the principal tapping positions, and for the extreme tapping positions.

b) the capability of the transformer (including bushings and tap-changers) to carry overloads in accordance with the emergency duties detailed in IEC 60354 shall be shown;

c) the system fault levels in kA for which the transformer is designed (as specified in table 5);

d) the zero sequence impedance's in the case of three-winding auto transformers;

e) the current transformer data detailed in 4.11.8 shall be shown;

f) a statement that the manufacturer deems it necessary for the transformer to be oil-filled under vacuum;

g) a statement that the transformer will withstand full vacuum at sea level;

h) the purchaser's reference number shall appear on the rating and diagram plate;

j) a blank space for the purchaser's asset number shall be provided;

k) the type, make and designation numbers of all bushings, to enable full identification (relating to stock spares) while the transformer is energised;

l) the valve and oil sampling point functions and positions;

m) a warning statement that the conservator contains a bag or other sealing systems if it is the case; and

n) the type of corrosion protection: Corrosive or low corrosive.

p) winding temperature resistor setting = 'x' . Where 'x' is given by the supplier.

Whilst a single plate is preferred, separate plates mounted adjacent to the main plate are acceptable for the information required by items (f), (g), (h), (k), (l), and (m).

a) To assist in the evaluation, the following typical tender drawings and descriptive data as specified in schedule A of an enquiry document and as deemed applicable by the tenderer, shall be provided:

i) outline drawing showing the position of terminals, conservator and gauge glasses and control cubicle and surge arresters where applicable,

ii) type test certificates of identical units shall be submitted when available,

iii) outline drawings of bushings, and

iv) all drawings mentioned in 4.22.1.

Tender information shall be submitted relating to the pre-treatment and sizing of windings and the assumptions made for the calculation of short-circuit strength;

Tenders shall include descriptive data and illustrations in sufficient detail to enable the equipment offered to be fully considered in respect of materials, design and construction of the individual parts.

This information shall be furnished before the closing date of tenders.

4.1.26 Special tools and equipment

The contractor shall provide, as part of the contract, free of charge, all the special tools and equipment that will be required for the normal maintenance of the transformer. The contractor shall provide a complete listing of such equipment and tools with their specific characteristics, including the type and the manufacturer and purpose at the tendering stage and the tools shall be handed over with the transformer. Tools and equipment may be used for the erection of the transformer but shall essentially be in as good as new condition when handed over. The Employer shall have the right to demand new equipment and tools of good quality if they are not in satisfactory condition.

4.1.27 Training of purchaser's staff

The contractor shall propose an appropriate training programme for the purchaser's operating and engineering staff. This shall include the nomination of an appropriate venue and the duration of the training period.

If the proposed training involves travelling and accommodation and subsistence away from the purchaser's home country, the Employer shall be responsible for all the direct travelling and subsistence expenses involved for a maximum number of four (4) of the purchaser's staff.

The Employer shall have the option at his own expense, to add a further two (2) staff member.

The contractor shall provide a complete and detailed schedule of the training events but it is expected that formal training should last not less than 5 consecutive working days nor more than 10 consecutive working days. The contractor shall advise the Employer of the minimum pre-requisite level of education required for the employees to successfully participate in the training programme.

Over and above any formal training, the programme shall include, as a minimum, an on-site component covering:

a) on site preparation for transportation;

b) loading and off-loading procedure and precautions

c) fitting of accessories like tap-changers, bushings and their testing;

d) sensors and protective devices and their testing;

e) vacuum treatment, drying filtering and impregnation; and

f) all testing of the completed system to ensure that it is ready for service.

Special emphasis shall be placed on quality control processes and the maintenance of the oil and insulation system in the best possible condition to ensure maximum life for the

transformer, as well the underlying theoretical aspects.

4.1.28 Erection

4.1.28.1 General

Erection if required in schedule A of an enquiry document, shall include off-loading, lifting, handling, positioning on foundations prepared by the purchaser, oil filling and installation of the transformer, together with the provision of all materials and ancillary equipment necessary for completing the installation. All work to be in accordance with the relevant safety standards.

4.1.28.2 Foundation tolerances and site details

Foundations provided by the Employer will be levelled to within a tolerance of ±3 mm in 3m in all directions.

4.1.28.3 Processing on site

Erection shall include filtering of oil and any drying-out and testing and checking procedures that are necessary to ensure that the transformer is ready for operation before handing over, together with the provision of the necessary materials, apparatus and instruments for these processes.

4.1.28.4 Testing on site

a) The testing and checking procedures shall include the verification of :

i) all voltage ratios on all phases;

ii)the vector group;

iii) three-phase 400 V magnetizing currents;

iv) a winding and core insulation test (min 1,5 KV);

b) a functional test for all alarm and trip contacts;

i) the CT polarities,

ii)function and insulation;

c) the fan directions and operation of starting and overload protection relays;

i) the control/power cabling insulation (min 1 KV);

ii)the correct operation and indication of tap-changers; and

iii) the correct position of all valves in the oil circuits;

iv) the nameplate impedance.

v) Wiring to the marshalling Interface Box terminals and to the tap change mechanism box terminals.

The results of the above tests shall be documented, signed off as part of the quality process and included in the transformer manuals. All equipment provided for erection shall be removed from site when erection is completed and the site cleaned of any debris and oil spillage.

4.1.28.5 Painting on site

Damage to paintwork sustained during transport and/or erection shall be made good by the contractor. If site respraying is necessary, labels and all other areas not to be painted shall be carefully masked. Any overspray that occurs despite this masking shall be removed by the contractor.

4.1.29 Transport

4.1.29.1 General conditions, blanking plates and gas filling

It shall be the contractor's responsibility to make all arrangements for transport to the site with the appropriate authorities.

The Employer will only accept delivery from the contractor on site. It shall be the contractor's responsibility to co-ordinate the arrangements for all stages of the transport of the transformer from the manufacturer's works to site, including trans-shipping where necessary.

Where off-loading is required, all apparatus, materials and packages shall be addressed to the contractor, who shall take delivery of the same at site.

The dimensions of the transformer shall be such that when packed for transport, it will comply with the requirements of the loading and clearance restrictions for the approved route.

All metal blanking plates and covers that are specifically required to transport the particular transformer, shall be considered part of the transformer and be handed over to the Employer after completion of erection. A listing of all these items and relevant drawings shall be included in the manuals, to enable the Employer to have duplicates of the plates manufactured if required. The dimensions and quantity of each item required for transport shall be on the drawings.

Where the supply of oil is included in the contract and where transport weight limitations permit, the transformers shall be transported with sufficient oil to cover the core and windings during all transport and storage conditions. The tank shall be sealed for transport to prevent all breathing.

Alternatively, where the above method is not applicable, the transformer shall be maintained continuously under positive pressure of dry air of at least 10 kPa during transport and storage until final installation. The pressure and the temperature at the time of filling shall be documented as part of the quality system. A pressure gauge, suitably protected shall be fitted to each transformer to facilitate checking of gas pressure during transit and on site. If another gas, such as nitrogen is used, appropriate safety labelling shall be provided.

The total duration that the unit is filled with dry gas shall be limited to three months where after the transformer shall be appropriately processed and filled with oil as for service.

Every precaution shall be taken to ensure that the transformer arrives at site in a satisfactory condition so that, after proper oil processing and filling, the transformer can be put into service without the necessity for extensive drying out, provided that oil quality requirements are met.

Full details of the proposed method of transport shall be submitted for approval.

The costs of any necessary extensions and/or improvements to existing facilities for transporting to site and escort and permit fees shall be included in the contractor's prices.

Transformers shall be transported without the following items attached:

a) Radiators
b) Conservator
c) Piping
d) Bushings

4.1.29.2 Accelerometer limits

An accelerometer shall be attached to the top of each transformer for the duration of the transport process. The accelerometer shall record continuously the acceleration of the transformer in three directions perpendicular to each other of which the main direction shall be in the direction of transport. The recording shall continue until the unit is in its final position. The traces shall be inspected as part of the quality process. The acceleration limit in any direction shall be 1g. The employer shall be notified if this limit is exceeded.

4.1.29.3 Road transport

The transport arrangements shall include the assurance that any abnormal loads comprising the transformers, their transporters, ancillary apparatus and plant and equipment required for erection shall pass without obstruction throughout the selected route.

4.1.29.4 Availability of lifting lugs and jacking pads

The lifting lugs and jacking pads shall not be prevented from fulfilling their functions when the transformer is arranged for transport on the transporters.

4.1.29.5 Transport support brackets

Attention is drawn to the necessity of receiving approval of the design and spacing of transport support brackets to avoid overstressing of the relevant trailer carrying beams.

5. Tests

5.1.1 General

5.1.1.1 Manufacturer’s testing capabilities

The manufacturer shall be fully responsible for performing or having performed all the required tests as specified. Tenderers shall confirm the manufacturer’s capabilities in this regard when submitting tenders. Any limitations shall be clearly stated. The manufacturer shall bear all additional costs related to not being able to test as tendered at his own works.

5.1.1.2 Witnessing of tests

The purchaser reserves the right to be present at any of the tests specified. The contractor shall ascertain the sequence of tests required in each particular case and whether witnessing of tests is required, and, after completion of all works preliminary tests, shall then give the purchaser not less than 14 days notice of the firm date when the transformers and associated apparatus will be ready for the witnessing of testing. For overseas suppliers the minimum required notification time period is 8 weeks. As many tests as possible shall be arranged to take place on the same day.

No transformer shall be despatched from the manufacturer's works without the purchaser's approval of its testing and overall quality. Any costs incurred by the contractor as a result of abortive or protracted visits by the purchaser's representatives, due to poor organisation on the part of the manufacturer or test failures, shall be for the contractor's account.

The purchaser shall be notified as soon as possible of all test failures and corrective measures. This shall take the form of abbreviated reports that shall, upon request, be supported by more detailed reports. It is desirable that the purchaser is notified of test failures to allow in situ inspection if desired.

5.1.1.3 Test instruments and apparatus

The testing apparatus shall subject to the purchaser's approval, and, where required, instruments shall be re-calibrated by an agreed independent body at the contractor's expense.

All apparatus shall be arranged and operated with due regard to the safety of personnel and so as to minimize damage to the test object in case of breakdown.

5.1.1.4 Test certificates

Four copies of test certificates in English shall be supplied to the purchaser within 30 days of the completion of the works tests.

A copy of the test certificate shall be incorporated into each maintenance/operating manual provided for that transformer.

5.1.1.5 On Site Tests

The results of the all the site tests done during commissioning shall be documented and a copy of the results included in the transformer manual. These tests shall include the verification of:

- voltage ratios on all three phases for each tap position;
- the vector group;
- measure insulation, HV to tank MV to tank HV to MV (5kV);
- a functional test for all alarm and trip contacts;
- CT insulation, HV to tank at 5kV, secondary to tank at 1kV, max magnetising curve the cores to be used, ratio tests for all taps and polarity;
- the fan and oil pump directions and operation of starting and overload protection relays;
- the control/power cabling insulation (min 1 kV);
- the correct operation and indication of tap-changers and timing checks;
- the correct position of all valves in the oil circuits;
- nameplate impedance to be verified;
- wiring to the marshalling Interface Box terminals and to the tap change mechanism box terminals;
- verify winding and oil thermometer accuracies;
- Tan Delta tests to be done on all bushings with test taps;
- disconnect the transformer core earth and megger to tank to ensure that the core is not bonded to the tank, 1kV max. Ensure reconnecting of the core earth on completion of testing;
- main tank and tap change oil levels to be checked;
- check to see if the main tank to conservator valve is open;
- frequency response analysis;
- check silica gel

The results of the above tests shall be documented, signed off as part of the quality process and included in the transformer manuals. All the tests to be witnessed by the Employer's representative.

All equipment provided for erection shall be removed from site when erection is completed and the site cleaned of any debris and oil spillage.

5.1.2 Test by the Manufacturer

The manufacturer shall perform the routine tests on each unit during the various stages of manufacturing as well as a complete type test for each design.

Test Description	Specification	Routine	Type	Special
Winding resistance test	IEC 60076-1	□□		
Voltage ratio and check of phase displacement	IEC 60076-1	□□		
Measurement of short circuit impedance and load losses	IEC 60076-1	□□		
No-load loss and current measurements	IEC 60076-1	□□		
Temperature rise tests (See also 3.2.7)	IEC 60076-2	□□		□
Dielectric (Impulse Test)	IEC 60076-3	□□		
Dielectric (Short Duration AC)	IEC 60076-3	□□		
Dielectric (Separate Source)	IEC 60076-3	□□		
Dielectric (Long Duration AC - partial discharge)	IEC 60076-3			□
On-load tap-changer tests	IEC 60214		□	
Tests applied to devices with alarm and tripping contacts	3.2.3 Tests applied to devices with alarm and tripping contacts	□□	□	
Transformer tank tests	3.2.4 Transformer tank tests	□□		
Bushing tests	IEC 60137	□□	□□	
Testing of current transformers	IEC 60185	□□	□□	
Gas and oil actuated relay tests	Gas and oil actuated relay tests	□□	□□	
Digital Thermometers	Digital Thermometers	□□	□□	
Acoustic noise level measurement	IEC 60076-10			□□
Determination of capacitances, windings to earth & between windings	IEC 60076-1			□□
Zero sequence impedance measurement	IEC 60076-1			□
Short-circuit withstand tests	IEC 60076-5			□
Measurement of insulation resistance to earth and between windings.	IEC 60076-1	□□		
Swept Frequency Response Analysis	Dobell		□	

5.1.3 Tests applied to devices with alarm and tripping contacts

5.1.3.1 Routine tests

The manufacturer's routine tests shall be performed to confirm that individual protection instruments or relays have been correctly manufactured and set up.

5.1.3.2 Type tests

The following type tests shall be carried out on one complete instrument or relay of each design and rating and equipped with alarm and tripping contacts and mounted as in service.

5.1.3.2.1 Contact life test

With the contacts loaded as in service and monitored by electrically operated counters, the device shall be operated over 2 500 complete cycles during each of which the making and breaking capabilities of the alarm and tripping contacts shall be demonstrated without sign of distress or failure.

5.1.3.2.2 Additional tests

The device/s shall comply with the following additional type tests:

Item	Test	Standard	Test Level	Compliance Criteria
Power frequency magnetic field				
1	Steady State	SANS61000-4-8	Class 5	100A/m continuous, 1000A/m short duration, 50Hz
2	Pulsed	SANS61000-4-9	Class 5	1000A/m (6.4/16s wave shape)
3	Damped Oscillatory	SANS61000-4-10	Class 5	100A/m, 100kHz and 1MHz
Insulation resistance				
4	Dielectric withstand	IEC60255-5	-	$2kV_{rms}$ 50Hz for 1 minute between all terminals to case earth
5	Insulation resistance	IEC60255-5	-	Insulation resistance greater than 20M when measured at 500Vdc
Environmental tests				
6	Cold	IEC 60068-2-1	-10oC or less	Operates within tolerance at -10oC (LCD screen operative)
7	Dry Heat	IEC 60068-2-2	+55oC or more	Operates within tolerance at +55oC
8	Cyclic Temperature and Humidity	IEC 60068-2-30	Test Db	25oC and 95% relative humidity/ 55oC and 95% relative humidity, 12 + 12 hour cycle
9	Enclosure protection	SANS60529	IP53	Protected against ingress of dust particles, spraying water
Mechanical tests				

10	Vibration	IEC60255-21-1	Class 2 (response and endurance)	Response: 1g, 10 - 150Hz, 1 sweep energised. Contacts should not close for longer than 2ms. Withstand: 2g 10 – 150Hz, 20 sweeps, unenergised Contacts should not close for longer than 2ms.
11	Shock	IEC60255-21-2	Class 1 (response and withstand)	Response: 5g, 11ms, 3 pulses in each direction, energised Withstand: 15g, 11ms, 3 pulses in each direction, unenergised
12	Bump	IEC60255-21-2	Class 1	10g, 16ms, 1000 pulses unenergised.
13	Seismic	IEC60255-21-3	Class 1	Test method A (single axis sine sweep test) 1 – 35Hz, 1 sweep.

5.1.4 Transformer tank tests

5.1.4.1 Routine oil leakage test

5.1.4.1.1 Tank and fittings

Each transformer tank complete with all the fittings and attachments normally in contact with the transformer oil, and filled with oil with a viscosity not greater than that specified in NRS 079, shall withstand, for 24 h, at room temperature, without leakage, a hydraulic pressure that is not less than 35 kPa above the maximum working pressure at every point in the transformer.

5.1.4.1.2 Pressure relief valve

One pressure relief valve of each make and type, set to open at the specified pressure, shall withstand, for 24 h, at room temperature, an internal pressure of oil of 20 kPa above the maximum working pressure at the position of the valve, without leakage.

5.1.4.2 Strength tests

5.1.4.2.1 Internal hydraulic pressure withstand

One tank, radiators and oil conservator of each type and size shall be subjected, for 1 min, to an internal hydraulic pressure equal to 70 kPa or the maximum operating pressure plus 35 kPa whichever is the greater, without suffering permanent deflection, measured after a first application greater than the amounts specified in Table 20 — Maximum permanent deflection of steel tank panels between stiffeners of this specification.

After a second application no further permanent deflection shall be measurable.

5.1.4.2.2 Vacuum withstand

One tank, radiators and oil conservator of each type and size, both empty of oil, shall be subjected, for 1 min, to an absolute internal pressure of 1.5kPa, against

atmospheric pressure at sea level on the outside, without suffering permanent deflection, measured after a first application greater than the amounts specified in Table 20 — Maximum permanent deflection of steel tank panels between stiffeners of this specification. After a second application no further permanent deflection shall be measurable.

NOTE: The above two tests may, by agreement, be combined.

5.1.4.2.3 Dye-penetration testing

To avoid leaks, dye-penetrant testing shall be done prior to corrosion proofing of the tank and other manufactured fittings after any welding.

5.1.5 Gas and oil actuated relay tests

5.1.5.1 Routine tests

These tests shall be carried out on each relay completely assembled as in service.

5.1.5.1.1 Oil-tightness

The relay shall be subjected to an internal hydraulic pressure of oil of 70 kPa for 24 h, at room temperature, without leakage.

5.1.5.1.2 Insulation

The insulation of all circuits which include contacts of switches, relays or contactors for isolation functions shall be tested for insulation resistance. This shall be not less than 20 MΩ when measured at d.c. 500 V.

The relay circuits shall withstand, for 60 s, an applied voltage of 2 kV r.m.s. applied in turn between each electrically independent circuit and the casing of the relay and between the separate and independent electrical circuits.

5.1.5.1.3 Alarm signalling

Air shall be introduced into the relay mounted as specified in 4.17, and at a minimum angle of 5° rising towards the oil conservator but at the same angle as it would be in service, until the alarm signalling contacts close. This shall take place before air escapes freely from the relay towards the oil conservator, but, not before a minimum quantity of air has been collected in the relay housing. This minimum shall be, in the case of a 25 mm relay, approximately 0.2 l, and in case of 50 mm and75 mm relays 0.3 l and 0.4 l respectively.

The quantity of air in the relay at the point of closure of the alarm signalling contacts shall be recorded on the relay test card specified in 4.17.10.

5.1.5.1.4 Tripping

With the relay mounted as in 5.5.1.3 Alarm signalling, the tripping functions shall be verified by tests to prove that the tripping contacts will close as follows:

a) with steady rates of oil flow through the relay within the limits given in Table 17 of this specification, at room temperature;

b) with an oil surge through the relay, produced by the rapid opening of a lever operated valve, preferably also within the limits given in Table 17

of this specification.

In both a) and b), the closure of the relay contacts shall be unaffected by the presence in the relay of sufficient gas to escape freely through the oil conservator pipe connection;

c) with further accumulation of gas in the relay but before gas escapes to the conservator.

NOTE The results of these tests, together with the flow rates producing contact closure at a 5° rising angle shall be recorded on the standard relay test card.

The quantity of gas in the relay at the point of closure of the trip contacts shall be recorded on the relay test card specified in 4.17.10.

5.1.5.2 Type tests

One relay of each make, size and type shall, after routine testing, be subjected to the following tests (unless acceptable certificates of previous tests on identical relays are available):

5.1.5.2.1 Vacuum

The empty relay shall be subjected to an internal pressure of 1.5kPa against atmospheric pressure at sea level without damage.

5.1.5.2.2 Contact life, vibration and shock

The alarm signalling and tripping contacts shall be tested as specified in 5.3 Tests applied to devices with alarm and tripping contacts.

After these tests the routine testing of the relay shall be repeated.

5.1.6 Digital Thermometers

5.1.6.1 Routine tests

These tests shall be carried out on each instrument completely assembled as in service.

5.1.6.1.1 Insulation

The insulation of all circuits which include contacts of switches, relays or contactors for isolation functions shall be tested for insulation resistance. This shall be not less than 20 MΩ when measured at d.c. 500 V.

All device circuits shall withstand, for 60 s, an applied voltage of 2 kV r.m.s. applied in turn between each electrically independent circuit and the casing of the relay and between the separate and independent electrical circuits.

5.1.6.1.2 Alarm and trip signalling

The device shall include the facility to simulate rising oil and winding temperatures so as to force operation of the alarm and trip contacts. This facility shall be used to confirm the thresholds at which the various contacts operate and reset.

5.1.6.2 Type tests

One relay of each make, size and type shall, after routine testing, be subjected to the following tests (unless acceptable certificates of previous tests on identical relays are available):

5.1.6.2.1 Auxiliary Power supply

The instrument shall operate with the auxiliary supply voltage in the band V Nominal ± 20%.

For supply interruptions lasting less than 10ms, the device shall function as if no interruption had occurred.

5.1.6.2.2 A.C. current inputs

Current transformer inputs shall preferably be rated at 1 A nominal with the following overload capabilities:

a) 50 x In for 3 s or 100 x In for 1 s

b) 2 x In continuously

5.1.6.2.3 Additional type tests

The type tests of as specified in 5.3 Tests applied to devices with alarm and tripping contacts shall apply. In addition to these, the device shall comply with the following type tests:

5.1.7 Specific Test Requirements

5.1.7.1 Temperature rise test

5.1.7.1.1 Test requirement

At the end of the temperature rise test the tank thermal image shall be determined with an IR camera. DGA samples shall be taken before any test is conducted. Thereafter at the conclusion of the dielectric test, temperature rise test, and finally the overload test.

Directly following the temperature rise test the overload test shall be carried out with a overload rating of 1.5p.u for 2h. At 15min intervals the tank shall be observed with an IR camera to determine any hot spots developing.

5.1.7.1.2 Acceptance criteria

The following acceptance criteria shall be applied to the results of this test:

a) The hot-spot temperature of the windings and any metallic parts in contact with oil shall not exceed 140°C, subject to the conditions in clause 4.14.7.

b) The top oil temperature shall not exceed 115°C.

c) No exorbitant gas development.

C3.2 Technical Specification for Neutral Electromagnetic Coupler with Neutral Earthing Resistor and Auxiliary Transformer

Content **Page**

1	Scope	154
2	Normative References	154
3	Definitions and Abbreviations	155
4	Requirements	155
4.1	General	155
4.2	Design details	162
4.3	Current transformers	165
4.4	Technical data	166
4.5	Component approval	166
5	Tests	166
5.1	Type and special tests	166
5.2	Routine Tests	168
5.3	Inspection and witnessing of tests	169
6	Transport	169

1 Scope

This specification covers combined oil-immersed three-phase neutral electromagnetic couplers with neutral-earthing resistors and auxiliary transformers (NECRTs). These NECRTs will be connected to the delta-connected secondary windings of standard large power transformers. NECRTs are installed to provide earthing points for the 11 & 33 kV system, and to limit the current during line-to-earth faults on the system.

2 Normative references

The following documents contain provisions that, through reference in the text, constitute requirements of this specification. All standards and specifications are subject to revision, and parties to agreements based on this specification will apply the most recent editions of the documents listed below.

IEC 60071-1/2:	Insulation co-ordination.
IEC 60076-1	Power transformers - Part 1: General.
IEC 60076-3	Power transformers - Part 3: Insulation levels and dielectric tests.
IEC 60076-5	Power transformers - Part 5: Ability to withstand short circuit.
IEC 60085	Thermal evaluation and classification of electrical insulation.
IEC 60137	Insulated bushings for alternating voltages above 1000 V.
IEC 60156	Insulating liquids - Determination of the breakdown voltage at power frequency.
IEC 60185	Current transformers.
IEC 60216-2	Guide for the determination of thermal endurance properties of electrical insulating materials.
IEC 60233	Tests on hollow insulators for use in electrical equipment.
IEC 60270	Partial discharge measurements.
IEC 60289	Reactors.
IEC 60296	Specification for unused mineral insulating oils for transformers and switchgear.
IEC 60505	Guide for the evaluation of insulation systems of electrical equipment.
IEC 60507	Artificial pollution tests on high voltage insulators to be used on a.c. systems.
IEC 60815	Guide for the selection of insulators in respect of polluted condition.
IEC 61109	Composite insulators for a.c. overhead lines with a nominal voltage greater than 1000 V - Definitions , test methods, and acceptance criteria.
BS 1872	Electroplated coatings of tin.
SANS 97	Electric cables - Impregnated-paper-insulated metal-sheathed cables for rated voltages from 3,3/3,3 kV up to 19/33 kV.
SANS 156	Moulded-case circuit-breakers.
SANS 780	Distribution transformers.
SANS 833,	Standard Transformer Bushings (Metric Units).
SANS 1091	National colour standards for paint.
EN 50180	Bushings above 1 kV up to 36 kV and from 250 A to 3,15 kA for liquid filled transformers.
EN 50181	Plug-in type bushings above 1 kV up to 36 kV and from 250 A to 1,25 kA for equipment other than liquid filled transformers.
NRS 012	Cable terminations and live conductors within air-filled enclosures (insulation co-ordination) for rated a.c. voltages from 7,2 kV and up to and including 36 kV
EN 50216-2	Power transformers and reactor fittings Gas and oil actuated relay for liquid immersed transformers and reactors with conservator

The following schedules form part of this specification.

Schedule ‘A’: Particulars of The Purchaser’s requirements.
Schedule ‘B’: Guarantees and technical particulars.

CHECK PAGE 47 OF CENTLEC SPEC

3 Definitions and abbreviations

3.1 Definitions

All definitions and abbreviations as stated are applicable to this document.

3.2 Abbreviations

3.2.1 Aux: Auxiliary transformer

3.2.2 NEC: Neutral electromagnetic coupler

3.2.3 NECRT: Combined three-phase neutral electromagnetic coupler with neutral earthing resistor and auxiliary transformer

3.2.4 NER: Neutral earthing resistor

3.2.5 MV: Medium Voltage

3.2.6 LV: Low Voltage

3.2.7 ONAN: Oil Natural Air Natural

4 Requirements

4.1 General

The combined oil-immersed three-phase neutral electromagnetic couplers with neutral-earthing resistors and auxiliary transformers (NECRT's) shall comply with this specification, unless otherwise specified in schedule A of an enquiry document. This specification overrides any other specification in cases of conflicting requirements, and schedule A of an enquiry document complements this specification with specific requirements.

The NECRT's shall comply with all the requirements of IEC 60289 as amended by the following additional or amended requirements. Notwithstanding the fact that a unit has been type tested the right to test any production unit supplied is reserved (before it has been in service) in accordance with any of the tests contained in IEC 60289 as amended here. The same compliance criteria will apply as in the case of a type test for these tests and failure of the unit in such a test will constitute non-compliance with this specification.

Changes to the design or manufacturing process of a type tested unit

Approval shall be obtained from the purchasers Engineer before any design and/or material changes can be implemented on approved designs. The proposed changes will evaluate and if deemed necessary the manufacturer will be instructed to redo (at his cost) the relevant type tests.

Short circuit current testing requirements

Manufacturers should note the change in requirements from previous specification and deviations from the IEC standards.

The manufacturer shall have an ISO 9000 quality system certified for design and manufacturing.

Note: A vertical arrangement of the units will be preferred in order to achieve a maximum practical height to the base of the bushings with a minimum practical base area. In order to achieve the minimum working clearances from the ground to the base of the bushing the dimensional limits specified in table 1 shall be adhered to.

The unit's base used to achieve this height is to be bolted to the tank and not welded.

Table 1 - Mandatory height requirements for outdoor bushings

1	2	3
U_m rms (kV)	**Height to base of MV bushings (m)**	**Vertical working clearance (m)**
11	2.7	2.5
33	2.9	2.5

4.1.1 Arrangement

The units shall be:

a) Naturally cooled
b) Free-breathing
c) Outdoor type
d) Oil-immersed
e) Fully-insulated
f) Zig-Zag connected
g) Three-phase 50Hz neutral electromagnetic couplers (NECs)
h) Combined with a neutral earthing resistor and three-phase 400/240 V auxiliary power transformer
i) All contained in the same tank
j) With only one common set of MV terminals

4.1.2 Auxiliary Transformer

The auxiliary transformer shall:

a) In all respects be designed and constructed in accordance with SABS 780 as a low loss transformer with a nominal rating of 100kVA
b) Have the core and winding assembly correctly located at the tank bottom
c) Be adequately braced in the two horizontal directions and fixed at the level of the upper yoke clamps
d) Not have core and winding assemblies suspended from the tank cover
e) Have access hand holes in the tank sides to facilitate connection of leads to the lower ends of the bushings
f) On the basis that the MV busbar(s) on the substation is/are regulated by the MV/MV OLTC transformer tap change controller, the MV voltage is expected to be between 100% and 105% of rated voltage. With the tappings on the MV/LV auxiliary supply are removed, then the rated secondary voltage should be 400V. Assuming that the MV busbar voltage is between 105% and 95%, a fixed tap MV/400 supply should be adequate for the auxiliary transformer.

4.1.3 Current limiting resistor

The current limiting resistor shall:

a) Be suitably insulated
b) Be mounted in the tank and securely located in each plane
c) The resistor shall be of stainless steel 3CR12 material

4.1.4 Oil

Each unit shall leave the factory:

a) Filled to the normal level
b) With dry oil
c) With appropriate action being taken to maintain the oil dryness during transportation and to avoid oil pollution of the dehydrating breather prior to delivery at site
d) With the oil being in accordance with IEC 60296
e) Oil sampling points to be labelled.

4.1.5 Auxiliary power output

a) The auxiliary transformer LV connections shall be brought out through two moulded-case, air insulated circuit-breakers (MCCBs) rated as specified in table 2.

Table 2 - Moulded-case circuit-breaker ratings

1	2	3
Description	**MCCB Feeding Relay House**	**MCCB Feeding Cooling Fan Motors**
Current rating	160 A	160 A
Breaking capacity	30 kA	30 kA
Voltage	420 V	420 V

The Moulded–case circuit breaker shall:

i) Be the type that provides for bolted connections on the transformer side
ii) Be suitable for bolting to crimped lugs on the tails of 35 mm² and 120 mm² solid aluminium cables respectively on the load side. (Pinch screws will not be acceptable)
iii) Have a load capability inherently independent of ambient temperature or shall be fully ambient temperature compensated up to 80 °C.
iv) Have all MCCB terminals and LV bushing terminals suitably shrouded to prevent inadvertent human contact.
v) In all other respects comply with SANS 156
vi) Together with a bolted neutral-link, be mounted in a dust-proof, vermin-proof and weather-proof, lockable enclosure with a vertically hinged access door.

The mounting arrangement of the MCB in the enclosure shall:

vii) Also allow for the installation of additional MCCB alongside the main MCCB. (A mounting back plate shall be provided)

viii) Provide an opening for cable entry (not less than 300 mm × 150 mm) which shall be covered by an undrilled, removable, gland-plate at an adequate distance (i.e. not less than 450 mm in the case of 100kVA auxiliary transformers) below the outgoing terminals of the MCCB.

4.1.6 MV Outer Cone Type C Bushings

All MV Phase bushings shall be 630 Amp Type C unless otherwise stated in Schedule A, suitable for screened fully insulated separable connector terminations in accordance with EN 50180/50181.

The minimum distance between bushing centres and distance from bushing centre to the metal enclosure shall be in accordance with SANS 780. Bushings shall be horizontally mounted on the tank. Details of bushings shall be provided in Schedule B. The phase sequence of bushings on all NECRT's shall be clearly marked.

Outer Cone Separable Connector Bushings

Proven moulded epoxy insulated bushings in accordance with IEC 60137/EN 50180/50181 up to 42kV will be specified in Schedule A. The following selection guide shall be used:

Current Rating (Amps)	Voltage Range (kV)	Bushing Interface Type
630	Up to 36	C**

Up to 24kV					
Bushing Interface type	Current Rating (Amps)	RMS symmetrical fault current (kA)			Peak Asymmetrical current (kA)
		1 Sec	2 Sec	3 Sec	
C**	630	50	35.3	28.8	125

36kV					
Bushing Interface type	Current Rating (Amps)	RMS symmetrical fault current (kA)			Peak Asymmetrical current (kA)
		1 Sec	2 Sec	3 Sec	
C**	630	50	35.3	28.8	125

** Bolted terminal

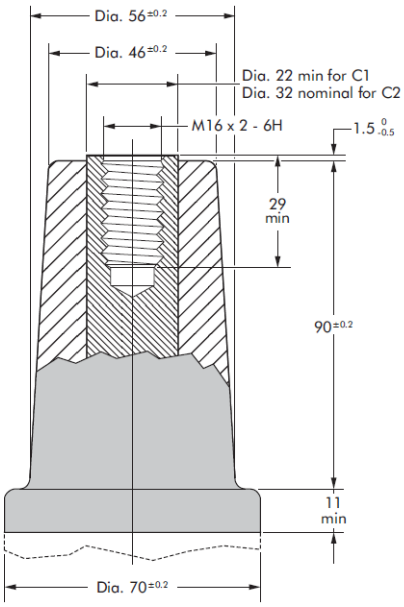

Dimensions according to EN 50180 and 50181 in (mm)
TYPE C INTERFACE OUTER CONE BUSHING

4.1.7 Power cable supports

Provision shall be made for a minimum one MV cable support one meter below the MV bushings. The minimum distance from the cable support clamp to the bushing centres shall be as specified in NRS 012 unless otherwise specified in Schedule A.

4.1.8 Outdoor Bushings

If outdoor bushings are specified in Schedule A

a) All units provided with outdoor bushings shall complying with SANS 1035 and SANS 1037
b) The profile characteristics of the bushings shall comply with the requirements of IEC 60815
c) Composite bushings shall be subjected to an accelerated ageing test
d) MV phase Outdoor bushings shall be vertically mounted on the tank
e) Bushings shall be spaced in order to accommodate a standard K-type cross-clamp (bolted-bolted) and still meet the requirements of SANS 780.(It can be assumed that the clamps will extend a maximum of 120mm to each side of the bushing centre)
f) The phase-to-phase exposed air clearances between the centre line of the neighbouring bushing shall meet the minimum dimensional requirements specified in table 3.

Table 3 - Minimum phase-to-phase air clearances

1	2
System nominal voltage (Un) (kV)r.m.s.	Minimum distance between outdoor bushing centres (mm)
11	700
33	700

Note: All bushings

g) The earth terminal of the NER shall be brought out via a bushing labelled ZN.
h) An additional neutral bushing, labelled P2, shall be provided
i) The internal neutral current transformers shall be located between P2 and ZN (see figure 2)
j) The P2 bushing will be used on site as a current injection point when testing the current transformers. The current carrying capacity of the conductor connecting P2 and ZN shall therefore be equal to the rated short-time current of the NECRT
k) The label shown in figure 1 shall be located on the tank directly below the P2 bushing. The value of the maximum injection current shall be equal to the rated short-time current of the NECRT.

Current injection terminal for site testing of neutral CTs Maximum injection current _____ for _____ seconds

Figure 1: Label located below neutral bushing, P2

4.1.9 Earth terminals

a) The main earth terminal shall comprise a stainless steel (grades 304 and 316) plate welded to the tank
b) The plate shall be a minimum of 40mm deep and shall be fitted with a stainless steel bolt, washer and spring washer.
c) The bolt shall be a M16 x 35mm bolt, threaded through.
d) The main earth terminal shall be located directly below the ZN bushing, not more than 100mm from the base
e) A suitably rated connector (not copper) shall be provided between ZN and the tank and from tank to support if applicable. (The tank and support structure if applicable shall act as continuity between the ZN and the holding down bolt).
f) A secondary earth terminal shall be provided inside the terminal box and shall comprise a M12 threaded earth stud with nut and washer, welded to the terminal box or tank.
g) The manufacturer shall ensure that a good electrical connection is achieved between the main and secondary earth terminals.

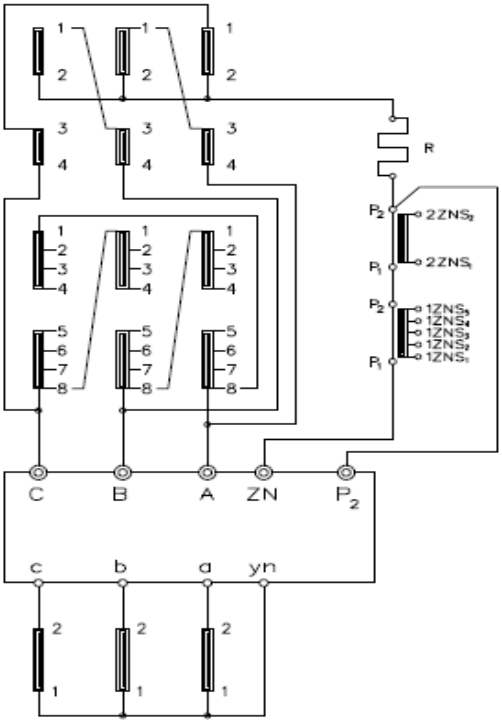

Figure 2: Schematic diagram of the NEC,NER and the Auxiliary transformer

4.1.10 Fittings

The following fittings shall be provided:

a) off-circuit tapping switch, oil-filling pipe, drain plug and drain valve, earthing terminal, flat underbase, lifting lugs and a breather pipe;
b) oil conservator with direct-reading oil level indicator. The oil conservator shall be mounted perpendicular to an imaginary line drawn through all three bushing centres;
c) gas- and oil-actuated relay as specified, cabled to the terminal box;
d) dehydrating breather;

e) dial-type top-oil thermometer with alarm and tripping contacts, selected, mounted, connected and arranged in accordance with the requirements.
f) check thermometer pocket;
g) the dehydrating breather, dial type thermometer and gas and oil actuated relay gas release cock shall be mounted 1500 mm above the base of the unit;
h) rating- and diagram-plate. The plate shall be made of stainless steel and shall have the various ratings and data engraved, embossed or stamped on it, as specified in IEC 60289 and SANS 780.
The current transformer details shall also appear on the plate, but the standard number shall be the number as specified (i.e. N33, N22 etc.). A statement specifying the maximum absolute internal pressure under which oil-filling of the tank(s) shall take place shall be provided by the manufacturer, if the manufacturer deems this necessary, otherwise it shall be stated that the NEC/auxiliary transformer is suitable for the application of an absolute internal pressure of 1,5 kPa at sea level.

i) For the current-limiting resistor the following data shall be inscribed:

Current-limiting resistor.....NECRT
Resistor nominal voltage (U_n/1,73).....kV
Resistance at 100°C, in ohms.....Ω
Rated current for 10 seconds, in amperes .....….A
Maximum continuous current, in amperes .....A
Rated frequency, in hertz.....Hz
Insulation levels
Impulse/50 Hz power frequency, in kilovolts.....kV
The Employer Order Number
Diagram giving terminal markings (as in figure 2).

j) Terminal (cable marshalling) box. To prevent entry of water into the terminal box the secondary wiring from the gas-and oil-actuated relay, current transformers and dial-type thermometer shall be arranged for side or bottom entry into the box. All terminal boxes shall be provided with a 25 mm diameter gauze-covered drain hole at the lowest part of the box.

An unobstructed, brass or aluminium, removable gland plate shall be provided on the bottom of this box. The gland plate shall have a minimum dimension of 70 mm x 130 mm.

4.1.11 Secondary wiring and terminals

4.1.11.1 Secondary wiring

Current transformer secondary circuits and other auxiliary circuits, shall

a) be wired with either 2,5 mm^2 wire or 4 mm^2 wire;

i) for secondary circuits the 2,5 mm^2 wire shall have not less than 30 strands,

ii) for secondary circuits the 4,0 mm^2 wire shall have not less than 7 strands, and

iii) for auxiliary circuits the 2,5 mm^2 wire and the 4,0 mm^2 wire shall have not less than 7 strands,

b) have oil and moisture-proof insulation and, where the temperature exceeds that of ambient air, thermal characteristic insulation at least equal to class A of IEC 60085;
c) be, in the case of external wiring, protected, either in the form of armoured cable, which shall be supported on rails clear of the tank surfaces, or by a conduit consisting of a

metal protective channel (mineral insulated copper sheathed cables will not be acceptable);

d) be, except for that treated as in c), suitably braced, clipped and/or laced to prevent vibration;
e) be, unless otherwise specified fitted with crimped terminations, compatible with the terminals with which they are associated (only the required minimum of wiring insulation shall be removed, for making wiring terminations, leaving the conductor strands clean and undamaged);
f) be, if situated inside the tank (internal wiring), connected to the terminals of the terminal box; and
g) have, at each end of each lead, an interlocking type ferrule with permanent black characters, impressed, on a white background, which display the same designation marked on the apparatus terminal to which each end (of a lead) is connected.

Terminations without lugs will not be acceptable. The wiring designation, marked on the ferrules, shall be read from terminal to insulation, independently of direction of entry into any devices (vertical or horizontal terminal strips, relay apparatus and instruments). All terminals and wiring identification devices shall be easily accessible after wiring and cabling have been completed.

4.1.11.2 Secondary terminals

The secondary terminals shall be type “B” only (i.e. rail-mounted, screw clamp, spring-loaded insertion type). Other types will not be acceptable.

In addition, since not more than two conductors shall be connected to any side of a terminal, the size of all terminals, to be used by others for external cables, shall be suitable for the termination of at least two multi-stranded copper leads of 4 mm^2 each.

4.1.12 Corrosion proofing and finishing

The final colour shall be dark admiralty grey (SANS 1091/G12). Conservators shall be painted white.

4.1.13 Radiators

The radiator on the NECRT shall conform to the requirements of SANS 780.

4.2 Design details

4.2.1 General Service conditions

The units shall have a life expectancy of 35 years and shall be suitable for use under the following conditions:

a) outdoor applications;
b) at any altitude up to 1 800 m above sea level;
c) at the following ambient temperatures:

    i) maximum: 40 °C,
    ii) maximum diurnal variation: 35 ºC, and
    iii) minimum: -15 °C,

d) relative humidity: up to 100 %;
e) a sinusoidal voltage waveform with a 50 Hz frequency;
f) symmetrical three-phase supply voltages, with negative and zero phase sequence

voltages less than 2 %; and

g) when modern engineering practices are used.

4.2.2 Ratings

It is required that the NEC/NER combination shall limit earth fault currents on the relevant systems to the order of:

a) 800 A to 960 A at nominal system voltage Un (i.e. 1056 A at 1,1 Un).

Tables 6 of annex A give values for the following variables for systems with a fault current that is limited to 800 A

- the system nominal voltage (Un);
- the zero sequence impedance limits for the combined NEC and NER;
- the apparent power from auxiliary transformer; and
- the NEC neutral current transformer ratings.

4.2.3 Over fluxing

The voltages on the main transformer terminals to which the NEC and auxiliary power transformer are connected shall not exceed 1,1 times the relevant system nominal voltage, the maximum permissible over flux is 0,1 pu.

4.2.4 Insulation levels

Notwithstanding the requirements of IEC 60289, the windings and terminals, including the neutral connections of the NEC and the associated auxiliary power transformer shall be fully insulated as specified in SANS 780. The NER shall be insulated to withstand the applied voltage test prescribed in the same specification. Table 5 specifies the acceptable insulation levels for the different voltages.

Table 5 - Standard voltages and insulation levels

1	2	3
System nominal voltage (Un) r.m.s. (kV)	Rated lightning impulse withstand voltage, peak (kV)	Rated short duration power frequency withstand voltage r.m.s. (kV)
11	95	28
33	170	70

Note: Excluding the bushings (refer to table 3)

4.2.5 Ability to withstand short-circuits

4.2.5.1 The auxiliary power transformer

a) The auxiliary power transformer shall meet the requirements of SANS 780.

4.2.5.2 The combined NEC/NER

a) Short-time currents

The combined NEC/NER shall be capable of withstanding the rated short-time current, specified in Tables 6, for 10 s.

b) Dynamic requirements

The combined NEC/NER shall be capable of withstanding the dynamic mechanical forces resulting from the application of the rated short-time current, specified in Tables 6 for 10 s.

4.2.5.3 Buchholz relay

The Buchholz relay shall be provided with two float elements and two pairs of electrically separate contacts - one pair for alarm and one pair for tripping.

One of the float elements shall monitor oil surges and the other shall monitor for long duration gas generation in the transformer.

The relay shall be stable during change in oil or gas pressure due to change in ambient temperature and/ or normal loading conditions.

The Buchholz relay shall be provided with the facility for testing by injection of air by hand pump and with discharge cock for draining and venting of gas.

The relay shall be tested according to EN 50216-2.

The relay shall have overall dimensions according to EN 50216-2.

4.2.6 Temperature rise limits

Temperature-rise limits shall comply with SANS780, in addition the respective temperature rises shall not exceed the following:

a) Top-oil temperature rise resulting from the losses due to the passage of maximum continuous neutral current together with full load on the auxiliary transformer at rated voltage, shall not exceed 55 °C.

b) Temperature rise of the metallic resistor under the conditions of (a) above shall not exceed 60 °C.

c) Temperature rise of the metallic resistor after passing the rated short-time current for 10 s and from an initial temperature of 100 °C (i.e. 40 °C ambient + 60 °C rise from (b)), shall not exceed 350 °C.

Note: The above will be demonstrated by the manufacturer by measurement in the case of a) and b) and by at calculation (at least) in the case of c). It is to be assumed that no dissipation of heat into the

oil take place during the period of 10s.

Manufacturers have to show that the construction of the resistor is such that it is not degraded by the temperature rise as a result of passage of short circuit current. i.e. that all materials used on the resistor construction is capable of handling the temperature rise.

This may also be demonstrated by testing a section of the resistor. Passing the appropriate currents through a section of the resistor which incorporates all the elements used in the resistor.

4.2.7 Tolerances

4.2.7.1 After completion of the unit, the value of the combined zero sequence reactance, i.e. of the NEC winding and the NER and expressed as $X_o = X_c + 3 X_r$ /phase, and the value of the combined zero sequence resistance, expressed as $R_o = R_c + 3 R_r$ /phase, shall be such that the ratio R_o/X_o shall not be less than 2 (a value as close as possible to 2 is the preferred one), and the combined zero sequence impedance $Z_o = \sqrt{(X_o^2 + R_o^2)}$ shall be within the limits specified in Table 6.

4.2.7.2 The minimum and maximum values of Z_o refer to the minimum and maximum values of X_o and R_o. The minimum values of R_o refer to the values at 100 °C of R_c (see 4.2.6(c)). The maximum values of Ro refer to the sum of the minimum values at 100 °C (see 4.2.6(c)) and the increase of Rc and Rr due to the combined effects of manufacturing tolerances and temperature rise above the permitted 100 °C. Namely 150 °C for copper windings and 350 °C for the resistor material, resulting from the passage of the 10 s short time current at its maximum level. The maximum values of X_o refer to the sum of the minimum value of X_o and the increase of X_o (by not more than 20 % above the minimum values) due to the manufacturing tolerances only.

NOTE: R_c and X_c are the resistance and reactance of one phase of the NEC winding, while R_r and X_r are the resistance and the reactance of the resistor.

4.3 Current transformers

4.3.1 NECRT current transformers

Two current transformers shall be fitted in the neutral connection of the earthed end of the NER as follows:

a) Nearer to the earthed terminal, a current transformer, used for restricted earth fault and differential protection, with a turns ratio of 1/2400 and tapping's at 1/1600, 1/600 and 1/400 to give turns ratios of 1/2400/2000/1800/1600/1200/1000/800/600/400/200 .This current transformer shall be tested on the 1/600 turns ratio to demonstrate that it meets all the requirements of Class TPS and will produce, in the secondary, not more than 100 mA exciting current at 300 V, with an internal resistance of not more than 2,4Ω .

The requirements of IEC 60185 (ratio error) will not apply to all other turns ratios, but

i) the voltage produced on any tapping shall be equivalent to the product of its value on the 1/600 turns ratio and the nominal turns on the particular tapping divided by 600, for example:

2400 tap: (300 V) ~ (2400/600) = 1200 V
2000 tap: (300 V) ~ (2000/600) = 1000 V
1800 tap: (300 V) ~ (1800/600) = 900 V
1600 tap: (300 V) ~ (1600/600) = 800 V
1200 tap: (300 V) ~ (1200/600) = 600 V
800 tap: (300 V) ~ (800/600) = 400 V
200 tap: (300 V) ~(200/600) = 100 V
i.e. a current transformer with 0.5 V/turn.

ii) the value of the internal resistance on any tapping shall be equivalent to the product of its value on the 1/600 turns ratio and the nominal turns on the particular tapping divided by 600, for example:

2400 tap: (2.4) ~ (2400/600) = 9.6
2000 tap: (2.4) ~ (2000/600) = 8
1800 tap: (2.4) ~ (1800/600) = 7.2
1600 tap: (2.4) ~ (1600/600) = 6.4
1200 tap: (2.4) ~ (1200/600) = 4.8
800 tap: (2.4) ~ (800/600) = 3.2
200 tap: (2.4) ~ (200/600) = 0.8
i.e. a current transformer with 4 m/turn.

iii) the magnetizing current drawn on any tapping shall be equivalent to the product of 100 mA and 600 divided by the nominal turns ratio at the particular tapping, for example:

2400 tap: (100 mA ~ 600)/(2400) = 25 mA
2000 tap: (100 mA ~ 600)/(2000) = 30 mA
1800 tap: (100 mA ~ 600)/(1800) = 33,3 mA
1600 tap: (100 mA ~ 600)/(1600) = 37,5 mA
1200 tap: (100 mA ~ 600)/(1200) = 50 mA
800 tap: (100 mA ~ 600)/(800) = 75 mA
200 tap: (100 mA ~ 600)/(200) = 300 mA

b) A single ratio 10 VA 10P10 current transformer used for inverse definite minimum time earth fault (IDMTEF) protection with a turns ratio of 800/1.

4.4 Technical data

4.4.1 Current transformer magnetisation curve

A magnetisation curve shall be provided for each protection current transformer, on the specified reference tapping for the multi-ratio type.

4.4.2 Drawings

A hard copy and an electronic copy of the required drawings shall be submitted. The drawings shall be to scale. Electronic copies of drawings shall be in DWG or DXF or DGN format. The following drawings shall be submitted for approval with the tender:

a) outline and general arrangement;
b) rating and diagram plate;
c) auxiliary wiring diagram; and
d) internal general assembly diagram.
e) Bushings

4.4.3 Design calculations

A calculation proving that the Buchholz relay will not operate under short time rated current conditions for 10 s shall be provided.

4.5 Component approval

The components and fittings associated with the NEC/NER /auxiliary transformer units will be subject to The Purchaser's• approval. Samples, technical literature, drawings, test reports and lists of the names of principal users, with experience gained shall be supplied on request.

5 Tests

The combined NEC/NER auxiliary transformer units shall be tested as prescribed in the relevant standards listed in the normative references, except where otherwise stated here or in schedule A of an enquiry document.

5.1 Type and special tests

Unless certified records of previous tests performed on identical units are available test reports for the following type and special tests will be required:

5.1.1 Dielectric tests in accordance with IEC 60076-3.

a) Short duration (60 s) power-frequency withstand voltage test, performed on the combined unit.
b) Full- and chopped-wave impulse test, performed on the combined unit.
c) Separate source voltage withstand test, performed on the combined unit.
d) Induced overvoltage withstand test, performed on the combined unit.

5.1.2 Measurement of zero sequence impedance.

It shall be shown that the zero sequence impedance of the NEC/NER/T combination is within the specified tolerances, up to rated short-time current.

a) the zero-sequence impedance shall be measured by connecting the three-phase terminals together and applying a single-phase voltage (V) between them and the earthed terminal, of the NER then:

Zo = 3V/I /phase, where I is the single-phase current,

b) measurements shall be made at I equal to 5 A, 10 A and 15 A and it shall be shown by extrapolation that the zero sequence impedance is within the specified tolerances, up to rated short-time current.

c) alternatively, a measurement can be made at I equal to rated short-time current in the NEC/NER.

5.1.3 Temperature rise test.

The stable top-oil temperature shall be measured for the following conditions:

a) Auxiliary power transformer loaded at the full load current and the NEC/NER loaded to the rated continuous nominal current (10 Amp).
b) NEC/NER loaded at the rated short-time current for 10 seconds, directly after completion of condition (a).

NOTE 1: The top-oil temperature rise shall not exceed 55 °C.

5.1.4 Demonstration of ability to withstand the dynamic effects of short-circuit and short-time current.

Short-circuit withstand test performed on the auxiliary transformer in accordance with IEC 60076-5.

5.1.4.1 Short circuit withstand testing requirements over and above the requirements of IEC 60289 60076-5

Value of the symmetrical short-circuit current (IEC 60076-5 paragraph 4.1.2)

The resistance value at 20 degree shall be used to calculate the short circuit currents to be applied to the NECRT.

A voltage of 115% of V nominal tap voltage, (i.e. 5% above V max and 15% above V_{rated}, shall be used to calculate the short circuit currents to be applied to the NECRT).

5.1.4.2 Number of short circuits

NECRTs are subject to many short circuits in their lives and manufacturers needs to note this. (This is their prime function in the network.)

The NECRTs are required to withstand at least 9 short circuits (three tests per phase) in a pre-set short circuit test configuration.

The initiation of the short circuit shall be so timed that the inrush current add to the peak short circuit current on at least one phase

5.1.4.3 Compliance criteria:

Measurement of the inductance of a NECRT is done by measuring the parallel value of the (Zero sequence inductance) three phases to ground. This has the effect that a 4.0% change in inductance on one arm of the NEC will only reflect as a 1.30% change in the zero sequence inductance of the NECRT. (A 7.5% change in one arm will reflect as 2.38% change in the zero sequence inductance and 2.0% change in inductance in one winding reflects as 0.65% change etc..)

5.1.4.4 Circular concentric windings

Total change in the inductance per phase (first to last test) is not allowed to exceed 2% (0.66% of NEC measurement).

The supplier has to demonstrate that a change greater than 1.0% (0.33% of NEC measurement) is of a non-detrimental self-limiting nature. Testing has to be repeated until the change after each successive test stabilise to less than 0.25% (0.082% of NEC measurement) of the inductance of the winding.

5.1.4.5 Non-circular concentric winding

Radial dimension changes in non-circular concentric winding transformers are recognised as potentially acceptable, but it has to be demonstrated by the supplier that these changes are of a non-detrimental self-limiting nature. Total change in the inductance per phase (first to last test) is not allowed to exceed 4.0% (1.30% of NEC measurement).

The supplier has to demonstrate that a change greater than 2% (0.66% of NEC measurement) is of a non-detrimental self-limiting nature. Testing has to be repeated until the change after each successive test stabilise to less than 0.5% (0.161% of NEC measurement) of the inductance of the winding.

5.1.5 Vacuum test

Vacuum test, at full vacuum.

5.1.6 Accelerated ageing test for composite bushings.

An artificial ageing test in accordance with Annex C of IEC 61109 is required.

NOTE: The rated short-time tests cannot be enforced due to limitations of testing facilities in South Africa. The Employer does however reserve the right to perform these tests on the network.

5.2 Routine tests

5.2.1 Zero sequence impedance test

This test consists of:

5.2.1.1 The measurement, at a voltage that produces rated continuous neutral current, of the combined zero sequence reactance of each NEC and NER (Un being the nominal phase to phase voltage of the NEC) to meet the requirements of 4.2.7(a);

5.2.1.2 The measurement of the overall resistance between the three MV terminals (with the auxiliary transformer disconnected) and the earthed terminal of the resistor. The resistance shall be measured as follows:

a) each phase separately between line and earthed terminal, (which gives the value of R_c+ R_r); and

b) the three line terminals, connected together, to the earthed terminal, (which gives the reading of $R_c/3 + R_r$).

The measured value of $R_c/3 + R_r$ shall be multiplied by 3 and corrected to a reference temperature of 100 °C; this corrected value and its increase, due to the temperature rise above 100 °C allowed in accordance with 4.2.7(b), shall respectively meet the requirements of 4.2.7(a).

5.2.2 Applied voltage test

5.2.2.1 Secondary wiring

Each secondary wiring insulation circuit shall withstand a test voltage of 4 kV, or the higher voltage as specified in the case of current transformer circuits, to earth and to all other circuits.

5.2.2.2 MV winding

The resistor shall be included with the NEC and auxiliary transformer for the test.

5.2.2.3 Separate source voltage withstand test

The test shall be conducted as specified in clause 10 of IEC 60076-3,

5.2.2.4 Induced overvoltage withstand test

The test shall be conducted as specified in clause 11 of IEC 60076-3,

5.2.3 Tests to be conducted on the auxiliary transformer

5.2.3.1 Measurement of no load loss and no load current

The test shall be conducted as specified in clause 10.5 of IEC 60076-1,

5.2.3.2 Measurement of impedance voltage and, short-circuit impedance and load loss

The test shall be conducted as specified in clause 10.4 of IEC 60076-1,

5.2.3.3 Measurement of voltage ratio and check of voltage vector relationship

The test shall be conducted as specified in clause 10.3 of IEC 60076-1,

5.3 Inspection and witnessing of tests

The Employer reserves the right to inspect the units at any stage during their manufacture and to be present at any of the tests specified.

The contractor shall inform The Purchaser, of the firm date on which tests are to be carried out, not less than 14 days prior to the date and shall ascertain whether The Employer requires witnessing of the tests. No unit shall be dispatched from the manufacturer's works without The Purchaser's approval.

5.3.1 Test certificates

Two copies of all test certificates or reports shall be supplied to The Employer

6 Transport

Each unit shall be crated and/or fitted with lashing lugs in compliance with the requirements of the road transport authorities for safe transport, and shall bear appropriate transport warning notices.

ANNEX A:

Table 6 NEC (Zig-Zag connection) and NER characteristics

System nominal voltage Un (kV)	NEC (Zig-Zag Connection) and NER characteristics							CTs fitted to the NEC neutral (as per figure 2)		Nominal power of auxiliary transformer (Having LV = 415 V/ 240 V; Vector group Dyn 11) (kVA)
	Continuous nominal current (A_{rms})	Short time current for 10 second in the NEC neutral and resistor (A_{rms})		Zero sequence reactance (Xo) and resistance (Ro) (Ohms/phase)				Turns ratio of class TPS multi ratio CT for REF and Diff. Protection (see 4.3) (N2/N1)	Turns ratio of single ratio 10 VA 10P10 CT for IDMTEF (see 4.3) (N2/N1)	
				Xo = Xc + 3Xr (see note 3)		Ro = Rc + 3Rr (see note 3)				
		Minimum	Maximum	Minimum	Maximum	Minimum (see note1)	Maximum (see note 2)			
11	10	800	1058	8.9	10.7	17.8	21.3	2400/1	800/1	100
33	10	800	1058	26,6	31,95	53,3	63,9	2400/1	800/1	100
NOTE 1 The minimum value of Ro refers to the value of Rc and Rr at 100 °C (40 °C ambient + 60 °C rise of metallic resistor due to continuous nominal current of 10 A) (see 4.2.7(b)).										
NOTE 2 The maximum value of Ro results from the increase of Rc and Rr due to manufacturing tolerances and the temperature rise (above 100 °C, see 4.2.8 b)) after a 10 second fault starting at the maximum fault current of 1058 A.										
NOTE 3 Xc and Rc refer to one phase of NEC winding, Xr and Rr refer to the metallic resistor. The condition Ro/Xo ≥ 2 must be met, preferably Ro/Xo = 2. Annex A (concluded)										

SCHEDULE D-1
GENERAL REQUIREMENTS

ITEM	DESCRIPTION	UNITS	132KV SYSTEM VOLTAGE	33KV SYSTEM VOLTAGE	11K SYSTEM VOLTAGE
1	System Voltage: • Nominal • Maximum	kV kV	132 145	33 36	11 12
2	System fault levels	kA	20	20	25
3	Short time rating	Sec	3	3	3
4	Frequency	Hz	50	50	50
5	Phase rotation. 1. A-Red Phase 2. B-Yellow Phase 3. C-Blue Phase		Nonstandard	Nonstandard	Nonstandard
6	Method of earthing		Effective	Effective	Noneffective (600/300 A NER (200KVA 960/600A NECRT)
7	Minimum Withstand Insulation Impulse Level (At Sea Level)	kV Crest	550	200	95
8	Dry and wet power frequency voltage	kV MIN	230	70	28
9	Critical corona voltage	kV		100	100
10	Noise level for radio interference voltage test measured at 110 per cent of line ground operating voltage at 100kHz.	uV	<2500	<2500	<2500
11	Pollution design: a) Moderate polluted atmosphere (creepage of 16mm per kV Um) b) Moderate polluted atmosphere (creepage of 20 mm per kV Um) c) Heavily polluted atmosphere (creepage of 25mm per kV Um)	mm mm mm	N/A N/A Yes(3625mm)	N/A N/A Yes(900mm)	N/A N/A Yes(300mm)

SCHEDULE D-2

5.4.14 INFORMATION TO BIDDERS AND SPECIFICATIONS THAT EQUIPMENT MUST COMPLY WITH THREE PHASE POWER TRANSFORMERS

TABLE6: INFORMATION TO BIDDERS AND SPECIFICATIONS THAT EQUIPMENT MUST COMPLY WITH FOR THREE PHASE POWER TRANSFORMERS.

ITEM	DESCRIPTION	DETAIL
1	Quantity required	As per "Ad Hoc" order
2	1. Type of colling* 2. Alternative design and offer	100% CMR ONAN Forced cooling for 110% overload ONAF
3	Primary line voltage	132 kV and 33 kV Normal 145 kV, 100 kV and 36 kV Maximum
4	Secondary voltage	33 kV 11 kV Normal and 100 kV, 36 kV and 12 kV Max
5	Fault level of system at transformers operated in parallel. 1. Symmetrical RMS current (3 sec) 2. Asymmetrical peak factor	Primary:21kA Secondary:18kA
6	Transformer earthing: 1. 132kV-Side 2. 33kV-Side 3. 11kV-Side	 Effective (solid) Effective (NER/NECRT) Effective (960/600 A, NER/NECRT)
7	11kV Earth fault current	960/600 AMP
8	Impulse withstand voltage: 1. Windings: 132 kV windings 33 kV windings 11 kV windings 2. Bushings 132 kV 33 kV 11 kV	 550 kV peak 200 kV peak 95 kV peak 550 kV peak 200 kV peak 95 kV peak
9	Wet and dry withstand level at power frequency voltage: 3. Windings: 132 kV windings 33 kV windings 11 kV 4. Bushings 132 kV 33 kV 11 kV	 230 kV 70 kV 28 kV 230 kV 70 KV peak 28 KV peak

10	33/11kV Impedance@75 Deg Cº 132 /11kV Impedance@75 Deg Cº 33kV Impedance@75 Deg Cº	10 MVA:13% Minimum on any tap. 20MVA All sizes of transformers as indicate 30MVA
11	Windings: a) Insulation: HV LV b) Winding connection: 132kV 88 kV 33kV 11 kV c) Vector group and neutral designation d) Tapped winding (HV Neutral) e) Type of tap changer On-load tap changer 1. Steps 2. Number of steps 3. Minimum Voltage ratio(132kV) (33kV) 4. Maximum Voltage ratio(132kV) (33kV)	 Fully insulated Fully insulated Star or Delta Delta Star or Delta YNyn0(132/11kV) YNd1(132/11kV) YNd11(132/11kV) Dyn11(132/11kV) YNd11(132/33 kV) Dyn1(132/88kV; 33/11kV) Optional OLTC/Vacuum steps In 1.25% Total of 17 positions 120 000V to 11000 V (-10%) 29 700 V to 11 000 V (-10%) 145 000V to 11000 V (+5%) 36 300 V to 11 000V (+10%)

	The tap changer must be able to operate as follows: 5. Individual (Hand and Auto) 6. Automatic and in parallel with each other 7. Remote control	 Yes Yes Yes
13	Must transformer and accessories be filled with oil	Yes-80kV tested
14	Transformer marshalling kiosk Transformer mounted	Transformer mounted
15	Pressure relief valve installed	Yes
16	Type of breather	Silica Gel (Size equivalent to volume of oil in transformer)
17	Supply voltage for transformer accessories	230/400 +/- 10% RMS AC
18	Final paint finish: Transformer Conservator Tap changer control panel kiosk	SANS 1091-G12 (Dark Grey) SANS 1091-W (White) SANS 1091-G54 (Dark Grey)
19	Current transformers required as per schedule	Yes
20	Surge arrestors required on 33 kV side of transformer	Yes (10 KA Station Class)
21	Mounting of transformer 21.1 Distribution Centre 21.2 Optional Transformers	On concrete plinth with suitable pitch under- based in open air. On concrete plinth with suitable pitch under-base in open air
22	Optional tests The cost of the following test shall be shown separately in the Schedule of prices. a) Temperature - rise test on one unit b) Impulse test c) Acoustic noise level measurement d) Overload test	 Yes Yes Yes Yes
23	Accessories required	1. Rating plate

		2. Diagram Plate 3. Drain Valves 4. Earthing terminals (LT) 5. x Earthing 6. Dehydrating breather (Silica Gel) 7. Pressure Relief Valve 8. Oil Temperature thermometer 9. Winding temperature thermometer including CT. 10. Gas and oil relay – transformer, Buchholz 11. Gas and oil relay - tap changer, Buchholz.
24		

ITEM	DESCRIPTION	FUNCTION	SUPPLY/ CONTROL VOLTAGE	WHERE REQUIRED	TO BE SUPPLIED BY BIDDER
1.	Relay for gas and/or oil activated	a) Alarm b) Trip	110 V DC	HT & LT	Yes
2.	Winding temperature	a) Alarm b) Trip c) Cooler control d) Indication on transformer	110 V DC	On LT	Yes
3.	Oil Temperature	a) Alarm b) Trip c) Indication on transformer	110 V DC		Yes
4.	Fan Fail	a) Alarm	110 V DC		Yes
5.	Tap changer equipment. 1. Tap position with corresponding voltage ratio. 2. Power supply fail 3. Tap changer fail. 4. Tap changer in process. 5. Tap changer out of step. 6. Voltmeter	a) Indication a) Indication b) Alarm a) Indication b) Alarm a) Indication b) Alarm a) Indication	110 V DC 110 V DC 110 V DC 110 V DC 110 V DC 110 V DC		Yes Yes Yes Yes Yes Yes

6.	Oil level	a) Indication b) Alarm	110 V DC		Yes
7.	Overpressure Valve must be installed between the yellow and blue phases on the low voltage side.	a. rip	110 V DC		Yes

All trip-, alarm, and other indications must be extended to and visible on the tap change control panel. All alarms and trips of the transformer, tap changer, voltage control and cooling apparatus must be visible with a flag indication on the tap changer control panel. These contacts must be voltage free and suitable for computer control.

Msunduzi municipality shall provide and install the cables from the marshalling kiosk to the tap change control panel.

LIGHTNING ARRESTORS

ITEM	DESCRIPTION	PARTICULARS
1.	Arrestor current rating	10 000 amps
2.	Rated RMS voltage between phase and earth	36 kV/145 kV
3.	Rated system frequency	50 Hz
4.	Indoor or outdoor	Outdoor
5.	Condition of transformer star point (Secondary side)	Earthed NER
6.	Whether there are any special operating conditions such as exposure to fumes, dust, salt, spray, excessive humidity, vibration, wind high, altitude or excessive temperature range	Dust and high temperature
7.	Highest system voltage between phases	36 kV/145kV
8.	Type of mounting	Pedestal - Mounted on transformer
9.	Feeder cable length	7 km
10.	Class of arrestor Station	Type to ANSI, or to IEC equivalent
11.	Level of over voltage developed (over voltage factor)	3,0
12.	Minimum rated voltage of arrestor SiC type. ZnO Type.	 N/A 36 kV/145kV
13.	Maximum radio influence voltage	2 500 uV
14.	Minimum corona existing voltage	25 kV RMS
15.	Minimum creepage insulation (RMS phase-phase)	25 mm/kV
16.	Rating of earth connections	12.5/3 kA/S/21/3 kA/S

General Technical specifications for 40MVA 132/11kV Power Transformers
Schedule A: Purchasers specific requirements
Schedule B: Guarantees and technical particulars of equipment offered

Note: xxxxxxx in Schedule A means supplier must specify his/her offer in "Schedule B"

xxxxxxx in Schedule B means that what is offered in "Schedule A" is a compulsory requirement

The table below represents the transformers of the same MVA rating and voltage levels, however; the vector groups are different. Whereby, the ratings or the specifications differ a separate sheet must be printed.

1	2	3	4	5
Item	**Description**	**Units**	**Schedule A**	**Schedule B**
1	**Delivery and off-loading**			
	Transformer delivered to		Pietermaritzburg	
	Delivery effected not before		TBA	
	Off-loaded from transport vehicle by supplier		Yes	
	Transferred to intended operating position by supplier		Yes	
2	**Erection and oil filling**			
	Erected ready for service	Yes/No	Yes	
	Erection completed not later than	Date	Best date	
	Place 3 ply Malthoid on plinth	Yes/No	Yes	
3	**Site details**			
	Access to site		Road	
	Distance from off-loading position	m	15	
	Rise or fall to off-loading position	m	1	
4	**Operating environment**			
	Corrosion protection:	Yes/No	Yes	
	Pollution level:	Medium/ Heavy	Very Heavy	
	Lighting Ground flash density:	/km^2/year	8	
5	**Quantity of units required**			
6	**Rated power**	MVA	40	
7	**Nominal system voltage "U_n" and rated voltage on principal tapping**			
	HV	kV $_{r.m.s}$	132	
	MV	kV $_{r.m.s}$	11	
8	**Vector group**			
	Type (YNd1 / YnynO)		YNd1 / YnynO	Xxxxxxxxxx
9	**Tap-changers**		OLTC	xxxxxxxxxx
	maintenance free operation interval		300,000	

10	**Bushing options**			
10.1	**HV Bushing options**		Outdoor/ Separable Plug	xxxxxxxxxx
	Type		Dry Outdoor	
	Manufacturer of Outdoor bushing		xxxxxxxxxx	
	Type		Inner Cone	
	Manufacturer of Inner Cone bushing		xxxxxxxxxx	
1	**2**	**3**	**4**	**5**
Item	**Description**	**units**	**Schedule A**	**Schedule B**
10.2	**MV Bushing options**		Outdoor/ Separable Plug	xxxxxxxxxx
	Type		Outdoor	
	Manufacturer of Outdoor bushing		xxxxxxxxxx	
	Type: Quadruple Size 3 Inner Cone per phase		Yes	
	Manufacturer of Inner cone bushing		xxxxxxxxxx	
11	**Special tests(List costs in price schedule)**			
	Acoustic noise level measurements	db	Yes	
12	**Maximum continuous ratings on any tapping with rated cooling ONAF**	MVA	40	
13	**Continuous ratings on any tapping with ONAN cooling**	MVA	24	
14	**Maximum current density in windings**			
	HV	A/mm^2	xxxxxxxxxx	
	MV	A/mm^2	xxxxxxxxxx	
15	**Short-circuit current that the transformer is designed to withstand, in per unit of r.m.s. rated current**			
	HV	p.u.	228	
	MV	p.u.	12	
16	**No-load loss on principal tapping (Note - No plus tolerance allowed)**			
	at 1,00 U_n	kW	xxxxxxxxxx	
	at 1,10 U_m	kW	xxxxxxxxxx	
17	**Core design**			
	Manufacturer of core steel		xxxxxxxxxx	
	Grade and thickness of core steel	grade/mm	xxxxxxxxxx	
	Number and length of limbs	no/mm	xxxxxxxxxx	
	Core diameter	mm	xxxxxxxxxx	
18	**Core Details**			
18.1	Cross sectional area of:			
	Wound limbs	mm^2	xxxxxxxxxx	
	Yoke	mm^2	xxxxxxxxxx	
	Unwound limbs	mm^2	xxxxxxxxxx	

18.2	Distance between core limb centre's	mm	xxxxxxxxxx	

General Technical specifications for 40MVA 132/11kV Power Transformers
Schedule A: Purchasers specific requirements
Schedule B: Guarantees and technical particulars of equipment offered

1	2	3	4	5
Item	**Description**	**units**	**Schedule A**	**Schedule B**
18.3	Total core mass	kg	xxxxxxxxxx	
18.4	The design flux density at U_n for:			
	Yoke	T	xxxxxxxxxx	
	Wound limbs	T	xxxxxxxxxx	
	Unwound limbs	T	xxxxxxxxxx	
18.5	Volts per turn at the above flux densities		xxxxxxxxxx	
18.6	Magnetizing current, at rated frequency, on principal tapping, in percent of rated current at maximum HV rating			
	at 0,90 U_t	%	xxxxxxxxxx	
	at 1,00 U_t	%	xxxxxxxxxx	
	at 1,10 U_t	%	xxxxxxxxxx	
18.7	Load loss (I^2R + stray) at 75 °C and at maximum HV rating with MV fully loaded (Note - No plus tolerance allowed)			
	On principal tapping	kW	xxxxxxxxxx	
	On extreme plus tapping	kW	xxxxxxxxxx	
	On extreme minus tapping	kW	xxxxxxxxxx	
19	**Input to coolers for maximum rated output in service**			
19.1	Fans			
	Power	kW	xxxxxxxxxx	
	Current	A	xxxxxxxxxx	
20	**Ohmic impedance at 75 °C and rated frequency based on maximum rated power of HV winding**			
20.1	HV/MV			
	On principal tapping	%	22	
	On extreme plus tapping	%	20	
	On extreme minus tapping	%	23	
20.2	Tolerances applicable to guaranteed impedances HV/MV			
	On principal tapping	%	xxxxxxxxxx	
	On extreme plus tapping	%	xxxxxxxxxx	
	On extreme minus tapping	%	xxxxxxxxxx	
20.3	Zero sequence impedances in percent of U_n^2/MVA			
	HV/MV:			

	On principal tapping	%	xxxxxxxxxx	
	On extreme plus tapping	%	xxxxxxxxxx	

General Technical specifications for 40MVA 132/11kV Power Transformers
Schedule A: Purchasers specific requirements
Schedule B: Guarantees and technical particulars of equipment offered

1	2	3	4	5
Item	**Description**	**units**	**Schedule A**	**Schedule B**
	HV/Neutral:			
	On principal tapping	%	xxxxxxxxxx	
	On extreme plus tapping	%	xxxxxxxxxx	
	On extreme minus tapping	%	xxxxxxxxxx	
	MV/NEC:			
	On principal tapping	%	xxxxxxxxxx	
	On extreme plus tapping	%	xxxxxxxxxx	
	On extreme minus tapping	%	xxxxxxxxxx	
21	**Temperature rises at altitude of 1800 m**			
	Top oil	°C	xxxxxxxxxx	
	Windings (by resistance)	°C	xxxxxxxxxx	
	Hotspot	°C	xxxxxxxxxx	
	Percentage of total losses that will be supplied	%	xxxxxxxxxx	
22	**Maximum acoustic noise**	dB(A)	76.8	
23	**Winding design**			
23.1	Indicate per coil the following:			
	Type (i.e. multilayer helix)		xxxxxxxxxx	
	Number of turns		xxxxxxxxxx	
	Conductor size, number and configuration		xxxxxxxxxx	
	Number and width of support spacers per turn		xxxxxxxxxx	
	Total conductor mass	kg	xxxxxxxxxx	
	Dry insulation mass	kg	xxxxxxxxxx	
24	**Minimum insulation for windings(Provide detailed test plan for evaluation)**			
24.1	Impulse withstand test voltage at sea level for:			
	HV	kV_{peak}	550	
	MV	kV_{peak}	95	
	HV Neutral	$kV_{r.m.s}$	250	
24.2	Sixty-second, separate source			
	HV	$kV_{r.m.s}$	95	
	MV	$kV_{r.m.s}$	28	
	HV Neutral	$kV_{r.m.s}$	95	
24.3	Induced-overvoltage withstand test voltages at sea level			
	HV	$kV_{r.m.s}$	230	
	MV	$kV_{r.m.s}$	22	

General Technical specifications for 40MVA 132/11kV Power Transformers
Schedule A: Purchasers specific requirements
Schedule B: Guarantees and technical particulars of equipment offered

1	2	3	4	5
Item	**Description**	**units**	**Schedule A**	**Schedule B**
24.4	Between line terminals			
	HV	$kV_{r.m.s}$	275	
	MV	$kV_{r.m.s}$	70	
	Test frequency	Hz	50	
	Test duration	sec	60	
25	**Main terminal bushings**			
25.1	**Main HV Outdoor terminal bushings**			
	Impulse withstand test voltage at sea level (1.2/50µs)	kV_{peak}	650	
	Sixty-second, power-frequency withstand test voltage to earth	$kV_{r.m.s}$	275	
	Total creepage distance	mm	4500	
	Protected creepage distance	mm		
25.2	**Main MV Outdoor terminal bushings**			
	Impulse withstand test voltage at sea level (1,2/50µs)	kV_{peak}	200	
	Sixty-second, power-frequency withstand test voltage to earth	$kV_{r.m.s}$	70	
	Total creepage distance	mm	375	
	Protected creepage distance	mm		
25.3	**Main HV Outdoor neutral terminal bushings**			
	Impulse withstand test voltage at sea level (1,2/50µs)	kV_{peak}	350	
	Sixty-second, power-frequency withstand test voltage to earth	$kV_{r.m.s}$	140	
	Total creepage distance	mm	1500	
	Protected creepage distance	mm		
25.4	**Main HV Inner Cone epoxy resin bushings**			
	145 kV bushing dimensions comply with IEC 62271-209		YES	
	Maximum conductor Cross section	mm^2	1600	
	Type tested according to IEC 60840 and IEC 62271-209		YES	
	Impulse withstand test voltage at sea level (1.2/50µs)	kV_{peak}	650	
	Sixty-second, power-frequency withstand test voltage	$kV_{r.m.s}$	275	
	Rated short-time withstand Current	1 sec kA	50	
	Maximum operating voltage	kV	145	
	Nominal Current rating per bushing connection	A	2500	

	Dust-proof water-tight Cover Disks required		Yes	

General Technical specifications for 40MVA 132/11kV Power Transformers
Schedule A: Purchasers specific requirements
Schedule B: Guarantees and technical particulars of equipment offered

1	2	3	4	5
Item	**Description**	**units**	**Schedule A**	**Schedule B**
25.5	**Pluggable Outdoor HV Bushing, ratings and bushing dimensions to comply with IEC 62271-209 (set of three)**		Yes	
25.6	**Main MV inner cone epoxy resin bushings**			
	bushing dimensions comply with EN 50180/50181 Size 3		YES	
	Cable Cross section	mm^2	630	
	Type tested according to IEC 60840and IEC 62271-209		YES	
	Impulse withstand test voltage at sea level (1.2/50µs)	kV_{peak}	200	
	Sixty-second, power-frequency withstand test voltage	$kV_{r.m.s}$	95	
	Rated short-time withstand current	1sec kA	50	
	Nominal Current rating per bushing connection	A	1250	
	Rated Peak current	kA	150	
	Maximum operating voltage	kV	42	
	Are Voltage-proof water-tight sealing sockets required		Yes	
25.7	**Pluggable Size 3 Outdoor MV 800 Amp Test and Outdoor Bushing adapter Connector (set of three)**		Yes	
25.8	**Give particulars of special turrets etc. that will be used**		xxxxxxxxxx	
26	**Transformer general information**			
	Manufacturer		xxxxxxxxxx	
	Place of manufacture		xxxxxxxxxx	
	Type of transformer (Core/Shell)		xxxxxxxxxx	
	Number of limbs (3/5)		xxxxxxxxxx	
	Type of cooling		ONAN/ONAF	
27	**Oil quantities:**			
	Transformer tank	litres	xxxxxxxxxx	
	Place of manufacture	litres	xxxxxxxxxx	
	Tap-changer	litres	xxxxxxxxxx	
	Total	litres	xxxxxxxxxx	

General Technical specifications for 40MVA 132/11kV Power Transformers
Schedule A: Purchasers specific requirements
Schedule B: Guarantees and technical particulars of equipment offered

1	2	3	4	5
Item	**Description**	**units**	**Schedule A**	**Schedule B**
28	**Masses:**			
	Mass of core and windings	kg	xxxxxxxxxx	
	Mass of core steel	kg	xxxxxxxxxx	
	Mass of winding copper (insulation excluded)	kg	xxxxxxxxxx	
	Mass of tank and fittings	kg	xxxxxxxxxx	
	Mass of coolers	kg	xxxxxxxxxx	
	Mass of oil	kg	xxxxxxxxxx	
	Total mass	kg	xxxxxxxxxx	
	Greatest transportation mass	kg	xxxxxxxxxx	
29	**Filling medium for transport**		xxxxxxxxxx	
30	**Overall dimensions of tank only**			
	length	mm	xxxxxxxxxx	
	Base plate thickness	mm	xxxxxxxxxx	
31	**Height over HV bushings**	mm	xxxxxxxxxx	
32	**Tank and cooler material thickness**			
	cooler tubes	mm	xxxxxxxxxx	
	pressed-sheet radiators	mm	xxxxxxxxxx	
33	**Safe withstand vacuum at sea level**	kPa	xxxxxxxxxx	
34	**Fan Motors (Forced cooling)**			
	Make and Quantity		xxxxxxxxxx	
	Totally enclosed weather-proof type of driving motor IEC 60034 (3 Phase 50Hz preferred)	V_{ac}	400/220	
	Power	kW	xxxxxxxxxx	
35	**On-load tap-changers**		Vacuum Resistive	
35.1	General			
	Manufacturer and type designation		xxxxxxxxxx	
	Precise electrical location of tappings		xxxxxxxxxx	
	Diagrammatic arrangement shown on Drawing No.		xxxxxxxxxx	
	Design and manufactured according to IEC60214-1		Yes	

General Technical specifications for 40MVA 132/11kV Power Transformers
Schedule A: Purchasers specific requirements
Schedule B: Guarantees and technical particulars of equipment offered

1	2	3	4	5
Item	**Description**	**units**	**Schedule A**	**Schedule B**
35.2	Tapping range of HV/MV ratio % of the ratio on the principal tapping:			
	Max	%	+5	
	Min	%	-15	
	Number of steps	No.	16	
	Size of steps	%	1.25	
	Number of positions (including transition positions)		xxxxxxxxxx	
35.3	Nominal 50 Hz ratings of tap-changer:			
	Voltage	$kV_{r.m.s.}$	44	
	Current	A	300 Min	
35.4	Insulation levels of tap-changer, lightning impulse level (1.2/50 µs full wave)			
	phase-to-ground	kV_{peak}	250	
	phase-to-phase	kV_{peak}	250	
35.5	Tap-changer power frequency withstand			
	phase-to-ground	$kV_{r.m.s.}$	95	
	phase-to-phase	$kV_{r.m.s.}$	95	
35.6	Tap-changer contacts			
	main tap selector contacts	kV/A	xxxxxxxxxx	
	main tap switching contacts(vacuum interrupter MSV)	kV/A	Xxxxxxxxxx	
	transition contacts(vacuum interrupter)	kV/A	Xxxxxxxxxx	
35.7	Tap-changer transition resistor	kV/A	Xxxxxxxxxx	
35.8	Tap-changer driving motor			
	Type of driving motor (3 Phase 50Hz)	V_{ac}	400	
	Power	kW	Xxxxxxxxxx	
	Current	A	Xxxxxxxxxx	
36	**No-load voltage appearing**			
	On principal tapping	kV	Xxxxxxxxxx	
	On extreme plus tapping	kV	Xxxxxxxxxx	
	On extreme minus tapping	kV	Xxxxxxxxxx	
37	**Is supply of contract drawings required?**		Yes	

General Technical specifications for 40MVA 132/11kV Power Transformers
Schedule A: Purchasers specific requirements
Schedule B: Guarantees and technical particulars of equipment offered

1	2	3	4	5
Item	**Description**	**units**	**Schedule A**	**Schedule B**
38	**Type test certificates shall be submitted with the tender for approval, otherwise it will be assumed that no type tests for identical units are available**		Yes	
39	**Indicating and protective devices**			
	Winding temperature thermometer(s)		Xxxxxxxxxx	
	Oil temperature thermometer		Xxxxxxxxxx	
	Oil- and gas-actuated relay		Xxxxxxxxxx	
	Pressure relief device		Xxxxxxxxxx	
	Tap-changer protective device (detail)		Xxxxxxxxxx	
	Dehydrating breathers		Xxxxxxxxxx	
	Conservator bag		Xxxxxxxxxx	
	Oil level indicators		Xxxxxxxxxx	

11 kV 960Amp Neutral electromagnetic coupler with neutral earthing resistor and auxiliary transformer
Schedule A: Purchaser's specific requirements
Schedule B: Guarantees and technical particulars of equipment offered

1	2	3	4	5
Item	**Description**	**units**	**Schedule A**	**Schedule B**
1	**Identification**			
	a) Supplier's name		xxxxxxxxxx	
	b) Manufacturer's name		xxxxxxxxxx	
	c) Type designation		xxxxxxxxxx	
2	**Site conditions**			
	a) Altitude	m	≤1800	xxxxxxxxxx
	b) Maximum ambient temperature	°C	40	xxxxxxxxxx
	c) Minimum ambient temperature	°C	-15	xxxxxxxxxx
	d) Maximum diurnal variation	°C	35	xxxxxxxxxx
	e) Intensity of solar radiation	kW/m^2	1.1	xxxxxxxxxx
	f) Relative humidity	%	≤100	xxxxxxxxxx
3	**Electrical conditions**			
	a) Nominal system voltage	kV	11	xxxxxxxxxx
	b) Maximum system voltage	kV	12	xxxxxxxxxx
	c) Nominal frequency	Hz	50	xxxxxxxxxx
4	**Rated requirements**			
4.1	General			
	a) Nominal short time (10 s) current of NEC and NER	A_{rms}	960	
	b) Nominal continuous current of NEC and NER	A_{rms}	10	
	c) Zero sequence reactance (Xo)	Ω/ph	8.9 to 10.7	
	d) Zero sequence resistance (Ro) at 100°C	Ω/ph	17.8 to 21.3	
	e) Zero sequence impedance (Zo) at 100°C	Ω/ph	13.25 to 22.4	
4.2	NEC			
	a) Zero sequence reactance (Xc)	Ω	xxxxxxxxxx	
	b) Zero sequence resistance (Rc) at 100°C	Ω	xxxxxxxxxx	
	c) No load losses of NEC at Un	kW	xxxxxxxxxx	
	d) Flux density of NEC core	T	xxxxxxxxxx	
	e) Magnetization current	A_{rms}	xxxxxxxxxx	
	f) Current density at nominal short time current	A/mm^2	xxxxxxxxxx	
4.3	NER			
	a) Zero sequence reactance (X_r)	Ω	xxxxxxxxxx	
	b) Zero sequence resistance (R_r) at 100 °C	Ω	xxxxxxxxxx	
	c) Nominal voltage (Un/√3)	kV	6,35	
	d) Temperature coefficient at 100 °C	/°C	xxxxxxxxxx	
	e) Specific heat capacity	kJ/kg°C	xxxxxxxxxx	
	f) Temperature range in which (d) and (e) apply	°C	xxxxxxxxxx	

11 kV 960Amp Neutral electromagnetic coupler with neutral earthing resistor and auxiliary transformer
Schedule A: Purchaser's specific requirements
Schedule B: Guarantees and technical particulars of equipment offered

1	2	3	4	5
Item	Description	units	Schedule A	Schedule B
4.4	Auxiliary transformer			
	a) Nominal rating	kVA	100	
	b) Primary nominal voltage	kV	11	
	c) No load secondary voltage	V	415	
	d) Vector group Dyn11 or Y zn11		xxxxxxxxx	
	e) Flux density of aux core	T	xxxxxxxxx	
	f) Magnetizing current	A	xxxxxxxxx	
	g) Load loss	kW	xxxxxxxxx	
	h) No-load loss	kW	xxxxxxxxx	
	i) Percentage impedance	%	SANS 780	
	Temperature rise (at site altitude)			
5.1	Top oil temperature for condition:			
	a) Passage of maximum continuous neutral current	ºC	xxxxxxxxxx	
	b) Passage of rated current of auxiliary transformer	ºC	xxxxxxxxxx	
	c) Passage of nominal short time current A for 10 s	ºC	xxxxxxxxxx	
	d) Passage of maximum continuous neutral current and rated current of auxiliary transformer	ºC	xxxxxxxxxx	
	e) Passage of maximum continuous neutral current and rated current of auxiliary transformer and nominal short time current A for 10 s	ºC	xxxxxxxxxx	
5.2	NEC winding temperature (calculated) for condition :			
	a) Passage of maximum continuous neutral current	ºC	xxxxxxxxxx	
	b) Passage of rated current of auxiliary transformer	ºC	xxxxxxxxxx	
	c) Passage of nominal short time current A for 10 s	ºC	xxxxxxxxxx	
	d) Passage of maximum continuous neutral current and rated current of auxiliary transformer	ºC	xxxxxxxxxx	
	e) Passage of maximum continuous neutral current and rated current of auxiliary transformer and nominal short time current A for 10 s	ºC	xxxxxxxxxx	
5.3	Metallic NER temperature (measured) for condition:			
	a) Passage of maximum continuous neutral current	ºC	xxxxxxxxxx	
	b) Passage of rated current of auxiliary transformer	ºC	xxxxxxxxxx	
	c) Passage of nominal short time current A for 10 s	ºC	xxxxxxxxxx	
	Material			
	a) NEC winding		xxxxxxxxxx	
	b) AUX MV winding		xxxxxxxxxx	
	c) AUX LV winding		xxxxxxxxxx	
	d) Grade of NER elements		xxxxxxxxxx	

11 kV 960Amp Neutral electromagnetic coupler with neutral earthing resistor and auxiliary transformer
Schedule A: Purchaser's specific requirements
Schedule B: Guarantees and technical particulars of equipment offered

1	2	3	4	5
Item	Description	units	Schedule A	Schedule B
7	**Material thickness**			
	a) Tank top	mm	xxxxxxxxxx	
	b) Tank bottom	mm	xxxxxxxxxx	
	c) Tank sides	mm	xxxxxxxxxx	
	d) Conservator	mm	xxxxxxxxxx	
	e) Radiator tubes (if any)	mm	xxxxxxxxxx	
8	**Housing and corrosion protection**			
	a) Material		xxxxxxxxxx	
	b) Corrosion protection		xxxxxxxxxx	
	c) Tank colour		Admiralty Grey	
	d) Conservator colour		White	
9	**MV Bushings**			
9.1	Outdoor Bushings			
	a) Profile characteristics		IEC-60815	
	b) Minimum creepage	mm/kV	31	
	c) Material		xxxxxxxxxx	
	d) Manufacturer and type		xxxxxxxxxx	
9.2	Type C Outer Cone Separable Connector Bushings			
	a) Profile characteristics to EN-50180/EN 50181		Yes	
	b) Current Rating	A	630	
	c) Material		xxxxxxxxxx	
	d) Manufacturer and type		xxxxxxxxxx	
10	**Current transformers**			
10.1	REF and Differential			
	a) Manufacturer		xxxxxxxxxx	
	b) Ratio		2400/ 1	
	c) Accuracy class (on 600/1 ratio)		TPS	
	d) Max excitation current at 300 V	mA	100	
	e) Max internal resistance on 600/1 ratio	Ω	2.4	
	f) Secondary voltage/turn	V/turn	0.5	
	g) Secondary internal resistance/turn	mΩ/turn	4	
	h) Location: (earthed end of NER nearer to earthed terminal)		xxxxxxxxxx	
	i) Reference number of mag. curve		xxxxxxxxxx	
10.2	IDMTEF			
	a) Manufacturer		xxxxxxxxxx	

	b) Ratio		800/1	
	c) Accuracy class		10P10	
	d) Location: (earthed end of NER near resistor)		xxxxxxxxxx	
	e) Reference number of mag. curve		xxxxxxxxxx	

11 kV 960Amp Neutral electromagnetic coupler with neutral earthing resistor and auxiliary transformer
Schedule A: Purchaser's specific requirements
Schedule B: Guarantees and technical particulars of equipment offered

Item	Description	unit	Schedule A:	Schedule B:
11	**NER elements**			
	a) Manufacturer		xxxxxxxxxx	
	b) Type designation		xxxxxxxxxx	
	c) Number of elements		xxxxxxxxxx	
12	**Buchholz relay**			
	a) Manufacturer		xxxxxxxxxx	
	b) Type designation		xxxxxxxxxx	
	c) Minimum pipe diameter	mm	50	
13	**Dial type thermometer**			
	a) Manufacturer		xxxxxxxxxx	
	b) Type designation		xxxxxxxxxx	
14	**Overall dimensions**			
	a) Height	mm	xxxxxxxxxx	
	b) Length	mm	xxxxxxxxxx	
	c) Width	mm	xxxxxxxxxx	
15	**Mass**			
	a) NEC core and winding	kg	xxxxxxxxxx	
	b) NER	kg	xxxxxxxxxx	
	c) AUX core and winding	kg	xxxxxxxxxx	
	d) Tank and fittings	kg	xxxxxxxxxx	
	e) Oil	kg	xxxxxxxxxx	
	f) Total	kg	xxxxxxxxxx	

16	**Documentation**			
	Provide reference number for:			
	a) Outline drawings		xxxxxxxxx	
	b) Rating and diagram plate		xxxxxxxxx	
	c) Internal general assembly drawing		xxxxxxxxx	
	d) AUX transformer wiring diagram		xxxxxxxxx	
17	**Type and special test**			
	Provide reference number of test report for:			
	a) Power-frequency voltage withstand test.		xxxxxxxxx	
	b) Impulse test.		xxxxxxxxx	
	c) Separate source voltage withstand test.		xxxxxxxxx	
	d) Induced overvoltage test.		xxxxxxxxx	
	e) Measurement of zero sequence impedance.		xxxxxxxxx	
	f) Temperature rise test.		xxxxxxxxx	
	g) Short-circuit test on AUX		xxxxxxxxx	
	h) Short-time current test on NEC/NER		xxxxxxxxx	xxxxxxxxxx
	i) Vacuum test		xxxxxxxxx	
	j) Accelerated ageing test for composite bushings.		xxxxxxxxx	

33 kV 600Amp Neutral electromagnetic coupler with neutral earthing resistor and auxiliary transformer
Schedule A: Purchaser's specific requirements
Schedule B: Guarantees and technical particulars of equipment offered

1	2	3	4	5
Item	**Description**	**units**	**Schedule A**	**Schedule B**
1	**Identification**			
	a) Supplier's name		xxxxxxxxxx	
	b) Manufacturer's name		xxxxxxxxxx	
	c) Type designation		xxxxxxxxxx	
2	**Site conditions**			
	a) Altitude	m	≤1800	xxxxxxxxxx
	b) Maximum ambient temperature	°C	40	xxxxxxxxxx
	c) Minimum ambient temperature	°C	-15	xxxxxxxxxx
	d) Maximum diurnal variation	°C	35	xxxxxxxxxx
	e) Intensity of solar radiation	kW/m^2	1.1	xxxxxxxxxx

	f) Relative humidity	%	≤100	xxxxxxxxxx
3	**Electrical conditions**			
	a) Nominal system voltage	kV	33	xxxxxxxxxx
	b) Maximum system voltage	kV	36	xxxxxxxxxx
	c) Nominal frequency	Hz	50	xxxxxxxxxx
4	**Rated requirements**			
4.1	General			
	a) Nominal short time (10 s) current of NEC and NER	A_{rms}	960	
	b) Nominal continuous current of NEC and NER	A_{rms}	10	
	c) Zero sequence reactance (Xo)	Ω/ph	8.9 to 10.7	
	d) Zero sequence resistance (Ro) at 100°C	Ω/ph	17.8 to 21.3	
	e) Zero sequence impedance (Zo) at 100°C	Ω/ph	13.25 to 22.4	
4.2	NEC			
	a) Zero sequence reactance (Xc)	Ω	xxxxxxxxxx	
	b) Zero sequence resistance (Rc) at 100°C	Ω	xxxxxxxxxx	
	c) No load losses of NEC at Un	kW	xxxxxxxxxx	
	d) Flux density of NEC core	T	xxxxxxxxxx	
	e) Magnetization current	A_{rms}	xxxxxxxxxx	
	f) Current density at nominal short time current	A/mm^2	xxxxxxxxxx	
4.3	NER			
	a) Zero sequence reactance (X_r)	Ω	xxxxxxxxxx	
	b) Zero sequence resistance (R_r) at 100 °C	Ω	xxxxxxxxxx	
	c) Nominal voltage (Un/√3)	kV	6,35	
	d) Temperature coefficient at 100 °C	/°C	xxxxxxxxxx	
	e) Specific heat capacity	kJ/kg°C	xxxxxxxxxx	
	f) Temperature range in which (d) and (e) apply	°C	xxxxxxxxxx	

33 kV 960Amp Neutral electromagnetic coupler with neutral earthing resistor and auxiliary transformer
Schedule A: Purchaser's specific requirements
Schedule B: Guarantees and technical particulars of equipment offered

1 Item	2 Description	3 units	4 Schedule A	5 Schedule B
4.4	Auxiliary transformer			
	a) Nominal rating	kVA	100	
	b) Primary nominal voltage	kV	33	
	c) No load secondary voltage	V	415	
	d) Vector group Dyn11 or Y zn11		xxxxxxxxx	
	e) Flux density of aux core	T	xxxxxxxxx	
	f) Magnetizing current	A	xxxxxxxxx	
	g) Load loss	kW	xxxxxxxxx	
	h) No-load loss	kW	xxxxxxxxx	
	i) Percentage impedance	%	SANS 780	
	Temperature rise (at site altitude)			
5.1	Top oil temperature for condition:			
	a) Passage of maximum continuous neutral current	ºC	xxxxxxxxxx	
	b) Passage of rated current of auxiliary transformer	ºC	xxxxxxxxxx	
	c) Passage of nominal short time current A for 10 s	ºC	xxxxxxxxxx	
	d) Passage of maximum continuous neutral current and rated current of auxiliary transformer	ºC	xxxxxxxxxx	
	e) Passage of maximum continuous neutral current and rated current of auxiliary transformer and nominal short time current A for 10 s	ºC	xxxxxxxxxx	
5.2	NEC winding temperature (calculated) for condition :			
	a) Passage of maximum continuous neutral current	ºC	xxxxxxxxxx	
	b) Passage of rated current of auxiliary transformer	ºC	xxxxxxxxxx	
	c) Passage of nominal short time current A for 10 s	ºC	xxxxxxxxxx	
	d) Passage of maximum continuous neutral current and rated current of auxiliary transformer	ºC	xxxxxxxxxx	
	e) Passage of maximum continuous neutral current and rated current of auxiliary transformer and nominal short time current A for 10 s	ºC	xxxxxxxxxx	
5.3	Metallic NER temperature (measured) for condition:			
	a) Passage of maximum continuous neutral current	ºC	xxxxxxxxxx	
	b) Passage of rated current of auxiliary transformer	ºC	xxxxxxxxxx	
	c) Passage of nominal short time current A for 10 s	ºC	xxxxxxxxxx	
	Material			
	a) NEC winding		xxxxxxxxxx	
	b) AUX MV winding		xxxxxxxxxx	
	c) AUX LV winding		xxxxxxxxxx	
	d) Grade of NER elements		xxxxxxxxxx	

33 kV 960Amp Neutral electromagnetic coupler with neutral earthing resistor and auxiliary transformer
Schedule A: Purchaser's specific requirements
Schedule B: Guarantees and technical particulars of equipment offered

1	2	3	4	5
Item	Description	units	Schedule A	Schedule B
7	**Material thickness**			
	a) Tank top	mm	xxxxxxxxxx	
	b) Tank bottom	mm	xxxxxxxxxx	
	c) Tank sides	mm	xxxxxxxxxx	
	d) Conservator	mm	xxxxxxxxxx	
	e) Radiator tubes (if any)	mm	xxxxxxxxxx	
8	**Housing and corrosion protection**			
	a) Material		xxxxxxxxxx	
	b) Corrosion protection		xxxxxxxxxx	
	c) Tank colour		Admiralty Grey	
	d) Conservator colour		White	
9	**MV Bushings**			
9.1	Outdoor Bushings			
	a) Profile characteristics		IEC-60815	
	b) Minimum creepage	mm/kV	31	
	c) Material		xxxxxxxxxx	
	d) Manufacturer and type		xxxxxxxxxx	
9.2	Type C Outer Cone Separable Connector Bushings			
	a) Profile characteristics to EN-50180/EN 50181		Yes	
	b) Current Rating	A	630	
	c) Material		xxxxxxxxxx	
	d) Manufacturer and type		xxxxxxxxxx	
10	**Current transformers**			
10.1	REF and Differential			
	a) Manufacturer		xxxxxxxxxx	
	b) Ratio		2400/ 1	
	c) Accuracy class (on 600/1 ratio)		TPS	
	d) Max excitation current at 300 V	mA	100	
	e) Max internal resistance on 600/1 ratio	Ω	2.4	
	f) Secondary voltage/turn	V/turn	0.5	
	g) Secondary internal resistance/turn	mΩ/turn	4	
	h) Location: (earthed end of NER nearer to earthed terminal)		xxxxxxxxxx	
	i) Reference number of mag. curve		xxxxxxxxxx	
10.2	IDMTEF			
	a) Manufacturer		xxxxxxxxxx	
	b) Ratio		800/1	
	c) Accuracy class		10P10	
	d) Location: (earthed end of NER near resistor)		xxxxxxxxxx	

	e) Reference number of mag. curve		xxxxxxxxxx	

33 kV 960Amp Neutral electromagnetic coupler with neutral earthing resistor and auxiliary transformer
Schedule A: Purchaser's specific requirements
Schedule B: Guarantees and technical particulars of equipment offered

Item	Description	unit	Schedule A:	Schedule B:
11	**NER elements**			
	a) Manufacturer		xxxxxxxxx	
	b) Type designation		xxxxxxxxx	
	c) Number of elements		xxxxxxxxx	
12	**Buchholz relay**			
	a) Manufacturer		xxxxxxxxx	
	b) Type designation		xxxxxxxxx	
	c) Minimum pipe diameter	mm	50	
13	**Dial type thermometer**			
	a) Manufacturer		xxxxxxxxx	
	b) Type designation		xxxxxxxxx	
14	**Overall dimensions**			
	a) Height	mm	xxxxxxxxx	
	b) Length	mm	xxxxxxxxx	
	c) Width	mm	xxxxxxxxx	
15	**Mass**			
	a) NEC core and winding	kg	xxxxxxxxx	
	b) NER	kg	xxxxxxxxx	
	c) AUX core and winding	kg	xxxxxxxxx	
	d) Tank and fittings	kg	xxxxxxxxx	
	e) Oil	kg	xxxxxxxxx	
	f) Total	kg	xxxxxxxxx	
16	**Documentation**			
	Provide reference number for:			
	a) Outline drawings		xxxxxxxxx	

	b) Rating and diagram plate		xxxxxxxxx x	
	c) Internal general assembly drawing		xxxxxxxxx x	
	d) AUX transformer wiring diagram		xxxxxxxxx x	
17	**Type and special test**			
	Provide reference number of test report for:			
	a) Power-frequency voltage withstand test.		xxxxxxxxx x	
	b) Impulse test.		xxxxxxxxx x	
	c) Separate source voltage withstand test.		xxxxxxxxx x	
	d) Induced overvoltage test.		xxxxxxxxx x	
	e) Measurement of zero sequence impedance.		xxxxxxxxx x	
	f) Temperature rise test.		xxxxxxxxx x	
	g) Short-circuit test on AUX		xxxxxxxxx x	
	h) Short-time current test on NEC/NER		xxxxxxxxx x	
	i) Vacuum test		xxxxxxxxx x	
	j) Accelerated ageing test for composite bushings.		xxxxxxxxx x	

SCHEDULE C: Place of Manufacture, Testing and Inspection

ITEM	COMPONENT	MANUFACTURER	PLACE OF MANUFACTURE	PLACE OF TESTING	PLACE OF INSPECTION
C.1	SF_6 Metal enclosed switchgear				
C.2	Local control panels				
C.3	Current transformers				
C.4	Voltage Transformers				
C.5	Gas handling trolley				
C.6	SF_6 Gas				

SCHEDULE D: Required Delivery Dates

ITEM	DESCRIPTION	DATES
D.1	Final arrangement drawings	12 Weeks after Official Order
D.2	Schematic and wiring diagrams	16 Weeks after Official Order
D.3	Transformer erected and ready for service	Two months after access to site
D.4	Delivery of Transformer	42 Weeks after Official Order

SCHEDULE E: Drawings Issued with this enquiry

ITEM	DESCRIPTION	Drawing No.
E.1	145kV Dry Type Transformer Termination for XLPE Cable	EPD-204-571-00-00-4/0
E.2	Typical Cable Bushing General Arrangement	STD-40TRF
E.3	MV- Connex Quadruple- Contact Elbow Bushing, up to 52kV	-
E.4	145kV High Voltage Inside Cone Dry Type Plug-in GIS/ Transformer Termination for OHL Wolf Conductor	

SCHEDULE G: SCHEDULE OF TESTS

G.1. Type Tests

The following type tests shall be carried out where satisfactory test certificates applicable to the switchgear offered are not submitted with the tender.

G.1.1	On-load tap-changer tests
G.1.2	Temperature rise tests
G.1.3	Bushing tests
G.1.4	Current Transformers (in accordance with IEC 60044-1)
G.1.5	Gas and oil actuated relay tests
G.1.6	Tests applied to devices with alarm and tripping contacts

G.2. Routine Tests

The following tests shall be carried out at the manufacturer's works as a routine of the manufacture of the equipment and, according to the recommendation of the relevant standard, shall be performed on all units.

G.2.1	Winding resistance
G.2.2	Voltage ratio
G.2.3	Impedance and load loss measurement
G.2.4	Current Transformers (in accordance with IEC 60044-1)
G.2.5	No-load loss and current measurements
G.2.6	Power frequency voltage withstand tests
G.2.7	On-load tap-changer tests
G.2.8	Lightning impulse voltage withstand tests
G.2.9	Tests applied to devices with alarm and tripping contacts
G.2.10	Core assembly dielectric and earthing continuity tests
G.2.11	Bushing tests
G.2.12	Transformer tank tests
G.2.13	Gas and oil actuated relay tests

G.3. Special Tests

G.3.1	Acoustic noise level measurement
G.3.2	Short-circuit tests
G.3.3	Magnetizing harmonic current measurement
G.3.4	Chopped impulse voltage withstand tests

Alle Rechte ausdrücklich vorbehalten. Vervielfältigungen oder Mitteilungen an Dritte, gleichgültig in welcher Form, sind ohne schriftliche Genehmigung von Tyco Electronics nicht gestattet.

Copyright: All rights strictly reserved.
Reproduction or issue to third parties without the written consent of Tyco Electronics are not permitted.

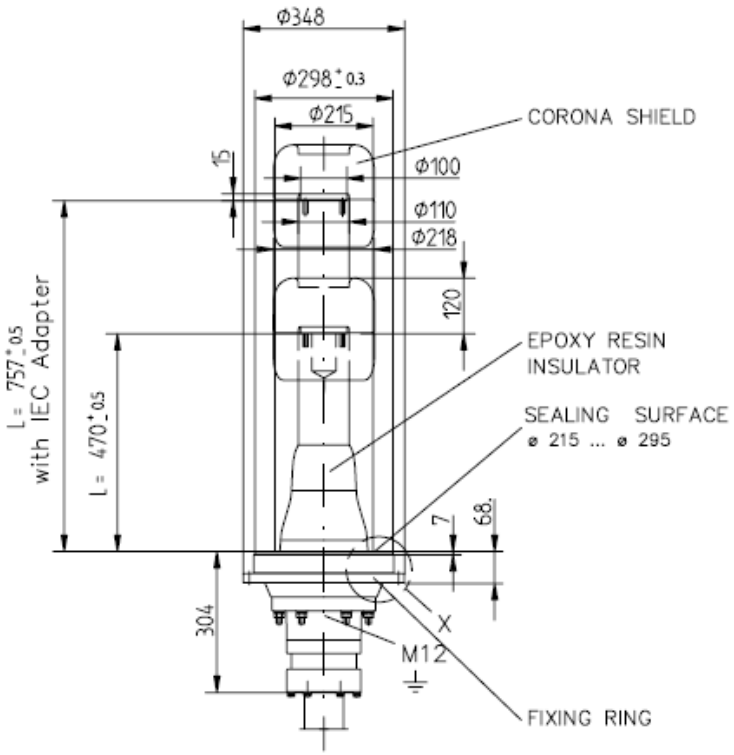

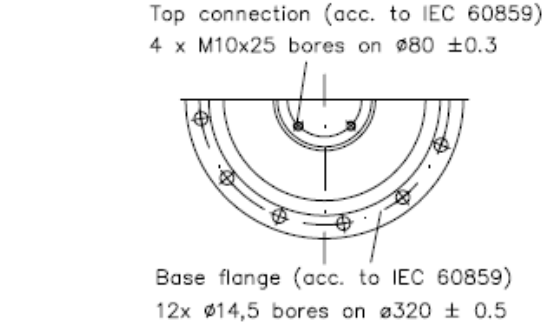

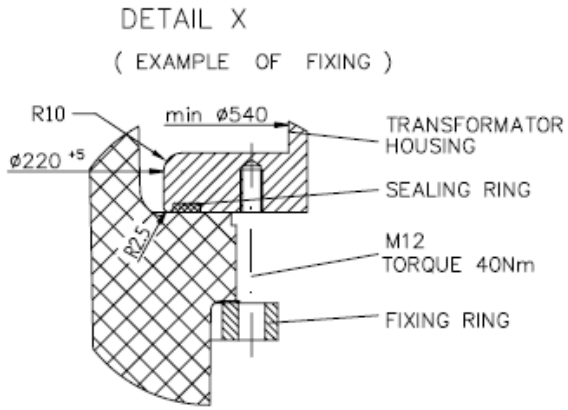

TRANSFORMER HOUSING, SEALING RING AND SCREWS M12
ARE NOT INCLUDED IN THE SCOPE OF SUPPLY

Technical Data

Highest Voltage U_m	kV	145	
Lightning Impulse Voltage	kV	650	
Length (with IEC Adapter)	mm	470	(757)
Weight approx. (with IEC Adapter)	kg	38	(42)
Max. Conductor Size Cu/Al approx. (optional)	mm²	800	(1200)
Outer Diameter Cable Insulation	mm	≤74	
Outer Diameter Cable Oversheath	mm	≤99	

tyco Electronics
Energy Division
Raychem

145 kV Dry Type
TRANSFORMER TERMINATION
FOR XLPE – CABLE

Tyco drawing no.:
EPD-204-571-00-00-4/0

PHVT-145
Offer drawing

checked	18.08.03 Stancu
approved	18.08.03 Kehl
index	0



MV-CONNEX Quadruple-Contact Elbow Bushings, up to 52 kV

For plug-in and clamping type construction, respectively.

A Plug-in type connecting part.
B Clamping type connecting part(supplied by the transformer manufacturer).

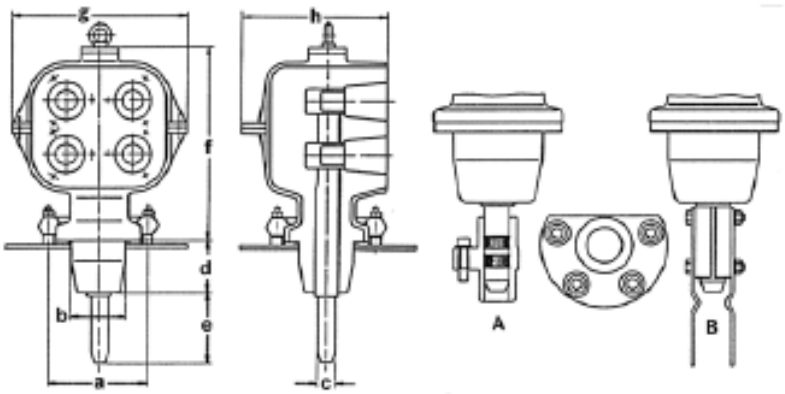

No.	Size	Max. operating voltage	max. rated current with plugged connection in trans-former - type A	max. rated current with clamped connection in trans-former - type B	a	b	c	d	e	f	g
		U_m (kV)	max. I_N (A)	max. I_N (A)	(mm)	(mm)	(mm)	(mm)	(mm)	(mm)	(mm)
827 124 716	2	42	1250	1250	180	110	30	125	90	387	345
827 124 727	2	42	2200	3150	200	135	35	125	125	387	345
827 146 336	3	42	2200	3150	200	135	35	125	125	449	390
827 146 337	3	52	2200	3150	200	135	35	125	125	449	390
827 146 836	3	42	2200	3150	200	135	35	300	125	449	390
827 146 837	3	52	2200	3150	200	135	35	300	125	449	390

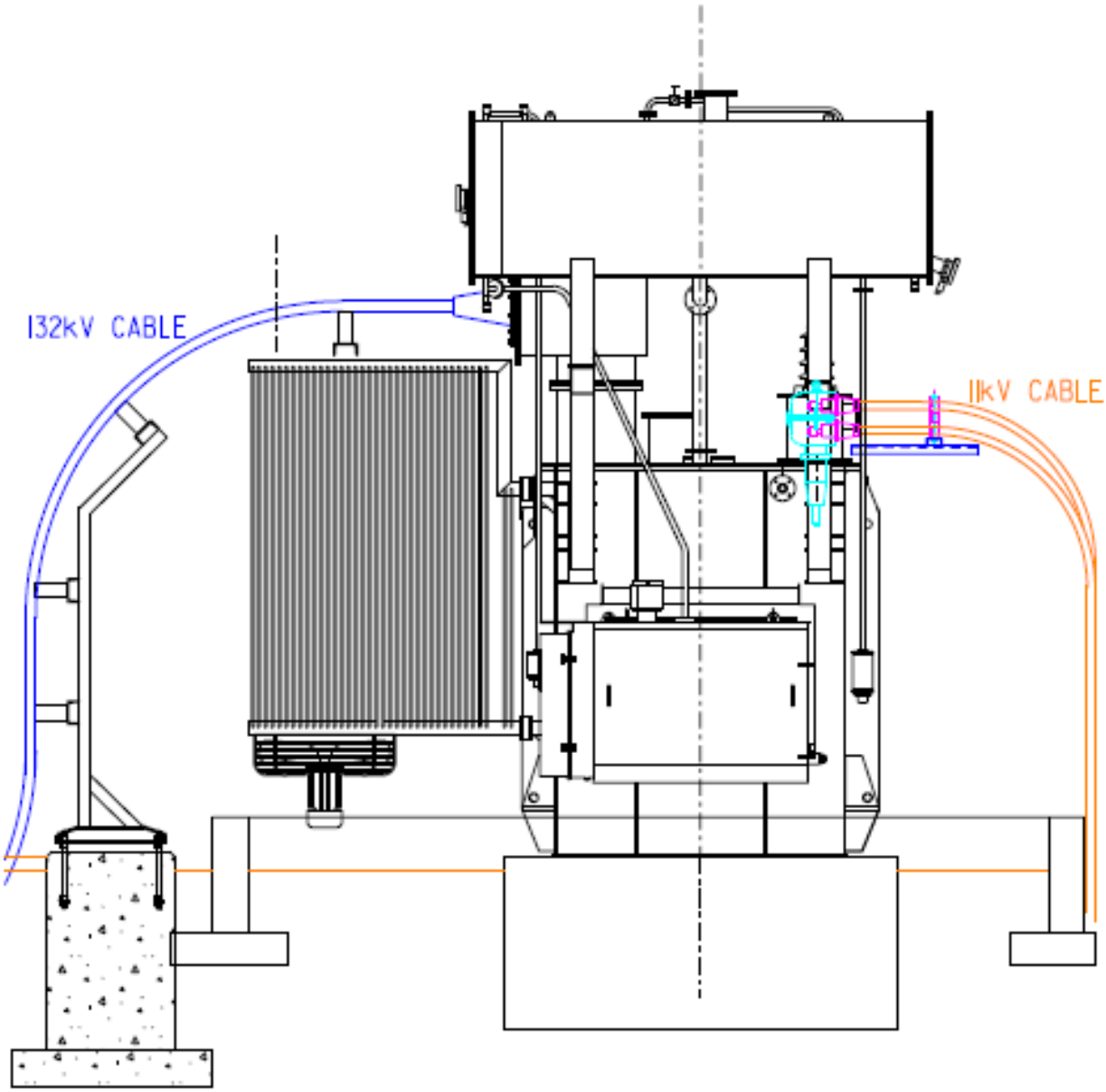

CITY OF CHOICE

PIETERMARITZBURG
MSUNDUZI

	NAME	DATE	TITLE	SCALE			
CHECKED (DO)			TYPICAL CABLE BUSHING GENERAL ARRANGEMENT	NTS			
TECH				DGN. NO.			
CT				STD-40TRF			
CE (DP)				SET	SHT	OFF	REV
APPROVED (C.E.E.)				02	01	01	00

THE MSUNDUZI MUNICIPALITY

SUPPLIES AND SERVICES CONTRACT No. E29 OF 26/27

THE DESIGN, MANUFACTURE, SUPPLY, DELIVERY, OFF-LOADING, ERECTION AND DRY-COMMISSIONING OF HIGH AND MEDIUM VOLTAGE POWER TRANSFORMERS AND ASSOCIATED EQUIPMENT

PRICE SCHEDULE

SECTION 1: 45MVA, 132/33kV, Ynyn0, % impedance: 12.16

ITEM No.	DESCRIPTION	Unit Supply (R)	Unit Install (R)	Quantity	Total Supply and Install
1	45MVA 132/33kV Transformer unit excluding MV and HV Phase bushings (ONAN/ONAF/OFAF)				
2	Transformer and NEC/R/Aux transformer transport and off-loading				
3	Transformer erecting and assembly				
4	33kV, 355 Amp NEC/R/Aux (NECRT's)				
5	Transformer rigging into final position				
6	HV Outdoor Bushing (Composite silicon insulator or porcelain bushings)				
7	HV Separable Tyco Bushing				
8	MV Outdoor Bushing (Composite silicon insulator or porcelain bushings)				
9	MV Separable Inner Cone Size 3 Quadrature Bushing 3150 Amp-Type B or Equivalent				
				Total Excl. VAT	
				VAT @ 15%	
				Total Including VAT Carried To Tender Form	
A Special instructions/notes to the supplier: Bushing options will be selected at the time of Ordering.					

No-load loss in kW at 1.00 U_n. As stated in Schedule B. P_0	
Short-circuit loss (or no-load loss) on principal tapping in kW, as stated in schedule B. Pk	
W_{loss} (kWhr)	

SECTION 2: 40MVA, 132/11KV, Ynd1, % impedance: 11.5

ITEM No.	DESCRIPTION	Unit Supply (R)	Unit Install (R)	Quantity	Total Supply and Install
1	40MVA 132/11kV Transformer unit excluding MV and HV Phase bushings				
2	Transformer and NEC/R/Aux transport and off-loading				
3	Transformer erecting and assembly				
4	11kV, 800 Amp NEC/R/Aux (NECRT's)				
5	Transformer rigging into final position				
6	HV Outdoor Bushing				
7	HV Separable Tyco Bushing				
8	MV Outdoor Bushing				
9	MV Separable Inner Cone Size 3 Quadrature Bushing 3150 Amp-Type B or Equivalent				
				Total Excl. VAT	
				VAT @ 15%	
				Total Including VAT Carried To Tender Form	
A Special instructions/notes to the supplier: Bushing options will be selected at the time of Ordering.					

No-load loss in kW at 1.00 U_n. As stated in Schedule B. P_0	
Short-circuit loss (or no-load loss) on principal tapping in kW, as stated in schedule B. Pk	
W_{loss} (kWhr)	

SECTION 3: 40MVA, 132/11KV, Ynyn0, % impedance: 17.36

ITEM No.	DESCRIPTION	Unit Supply (R)	Unit Install (R)	Quantity	Total Supply and Install
1	40MVA 132/11kV Transformer unit excluding MV and HV Phase bushings				
2	Transformer and NEC/R/Aux transport and off-loading				
3	Transformer erecting and assembly				
4	800 Amp NEC/R/Aux(NECRT's)				
5	Transformer rigging into final position				
6	HV Outdoor Bushing				
7	HV Separable Tyco Bushing				
8	MV Outdoor Bushing				
9	MV Separable Inner Cone Size 3 Quadrature Bushing 3150 Amp-Type B or Equivalent				
				Total Excl. VAT	
				VAT @ 15%	
				Total Including VAT Carried To Tender Form	
A Special instructions/notes to the supplier: Bushing options will be selected at the time of Ordering.					

No-load loss in kW at 1.00 U_n. As stated in Schedule B. P_0	
Short-circuit loss (or no-load loss) on principal tapping in kW, as stated in schedule B. Pk	
W_{loss} (kWhr)	

SECTION 4: 30MVA, 132/11KV, YnZn1, % impedance: 17.8

ITEM No.	DESCRIPTION	Unit Supply (R)	Unit Install (R)	Quantity	Total Supply and Install
1	30MVA 132/11kV Transformer unit excluding MV and HV Phase bushings				
2	Transformer and NEC/R/Aux transport and off-loading				
3	Transformer erecting and assembly				
4	355 Amp NEC/R/Aux(NECRT's)				
5	Transformer rigging into final position				
6	HV Outdoor Bushing				
7	HV Separable Tyco Bushing				
8	MV Outdoor Bushing				
9	MV Separable Inner Cone Size 3 Quadrature Bushing 3150 Amp-Type B or Equivalent				
				Total Excl. VAT	
				VAT @ 15%	
				Total Including VAT Carried To Tender Form	
A Special instructions/notes to the supplier: Bushing options will be selected at the time of Ordering.					

No-load loss in kW at 1.00 U_n. As stated in Schedule B. P_0	
Short-circuit loss (or no-load loss) on principal tapping in kW, as stated in schedule B. Pk	
W_{loss} (kWhr)	

SECTION 5: 30MVA, 132/11KV, Ynyn0, % impedance: 17.36

ITEM No.	DESCRIPTION	Unit Supply (R)	Unit Install (R)	Quantity	Total Supply and Install
1	30MVA 132/11kV Transformer unit excluding MV and HV Phase bushings				
2	Transformer and NEC/R/Aux transport and off-loading				
3	Transformer erecting and assembly				
4	355 Amp NEC/R/Aux (NECRT's)				
5	Transformer rigging into final position				
6	HV Outdoor Bushing				
7	HV Separable Tyco Bushing				
8	MV Outdoor Bushing				
9	MV Separable Inner Cone Size 3 Quadrature Bushing 3150 Amp-Type B or Equivalent				
				Total Excl. VAT	
				VAT @ 15%	
				Total Including VAT Carried To Tender Form	
A Special instructions/notes to the supplier: Bushing options will be selected at the time of Ordering.					

No-load loss in kW at 1.00 U_n. As stated in Schedule B. P_0	
Short-circuit loss (or no-load loss) on principal tapping in kW, as stated in schedule B. Pk	
W_{loss} (kWhr)	

SECTION 6: 30MVA, 132/11KV, Ynd1, % impedance: 15.8

ITEM No.	DESCRIPTION	Unit Supply (R)	Unit Install (R)	Quantity	Total Supply and Install
1	30MVA 132/11kV Transformer unit excluding MV and HV Phase bushings				
2	Transformer and NEC/R/Aux transport and off-loading				
3	Transformer erecting and assembly				
4	355 Amp NEC/R/Aux(NECRT's)				
5	Transformer rigging into final position				
6	HV Outdoor Bushing				
7	HV Separable Tyco Bushing				
8	MV Outdoor Bushing				
9	MV Separable Inner Cone Size 3 Quadrature Bushing 3150 Amp-Type B or Equivalent				
				Total Excl. VAT	
				VAT @ 15%	
				Total Including VAT Carried To Tender Form	
A Special instructions/notes to the supplier: Bushing options will be selected at the time of Ordering.					

No-load loss in kW at 1.00 U_n. As stated in Schedule B. P_0	
Short-circuit loss (or no-load loss) on principal tapping in kW, as stated in schedule B. Pk	
W_{loss} (kWhr)	

SECTION 7: 20MVA, 132/33kV, Dyn1, % impedance: 9.42

ITEM No.	DESCRIPTION	Unit Supply (R)	Unit Install (R)	Quantity	Total Supply and Install
1	20MVA 132/33kV Transformer unit excluding MV and HV Phase bushings				
2	Transformer and NEC/R/Aux transport and off-loading				
3	Transformer erecting and assembly				
4	355 Amp NEC/R/Aux(NECRT's)				
5	Transformer rigging into final position				
6	HV Outdoor Bushing				
7	HV Separable Tyco Bushing				
8	MV Outdoor Bushing				
9	MV Separable Inner Cone Size 3 Quadrature Bushing 3150 Amp-Type B or Equivalent				
	Total Excl. VAT				
	VAT @ 15%				
	Total Including VAT Carried To Tender Form				
A Special instructions/notes to the supplier: Bushing options will be selected at the time of Ordering.					

No-load loss in kW at 1.00 U_n. As stated in Schedule B. P_0	
Short-circuit loss (or no-load loss) on principal tapping in kW, as stated in schedule B. Pk	
W_{loss} (kWhr)	

SECTION 8: 15MVA, 132/33kV, Dyn1, % impedance: 10.4

ITEM No.	DESCRIPTION	Unit Supply (R)	Unit Install (R)	Quantity	Total Supply and Install
1	15MVA 132/33kV Transformer unit excluding MV and HV Phase bushings				
2	Transformer and NEC/R/Aux transport and off-loading				
3	Transformer erecting and assembly				
4	33kV, 355 Amp NEC/R/Aux(NECRT's)				
5	Transformer rigging into final position				
6	HV Outdoor Bushing				
7	HV Separable Tyco Bushing				
8	MV Outdoor Bushing				
9	MV Separable Inner Cone Size 3 Quadrature Bushing 3150 Amp-Type B or Equivalent				
				Total Excl. VAT	
				VAT @ 15%	
				Total Including VAT Carried To Tender Form	
A Special instruction/notes to the supplier: Bushing options will be selected at the time of Ordering.					

No-load loss in kW at 1.00 U_n. As stated in Schedule B. P_0	
Short-circuit loss (or no-load loss) on principal tapping in kW, as stated in schedule B. Pk	
W_{loss} (kWhr)	

SECTION 9: PRICE SCHEDULE FOR COMBINED NEC/NER/AUXILIARY TRANSFORMERS

No.	DESCRIPTION	Unit Supply (R)	Unit Install (R)	Total Supply and Install
1	11kV/300A NEC/NER/Auxiliary transformer			
2	11kV/600A NEC/NER/Auxiliary transformer			
3	11kV/960A NEC/NER/Auxiliary transformer			
4	33kV/300A NEC/NER/Auxiliary transformer			
5	33kV/600A NEC/NER/Auxiliary transformer			
6	33kV/960A NEC/NER/Auxiliary transformer			
	Total Excl. VAT			
	VAT @ 15%			
	Total Including VAT Carried To Tender Form			

ADDITONAL (NOT TO BE USED FOR EVALUATION)

No.	DESCRIPTION	Unit Supply (R)	Unit Install (R)	Quantity	Total
1	Provisional Sum for Factory Acceptance Testing	xxxxxxxxxxx	Xxxxxxxxxxxx	3 Personnel	
2	Online Power Transformer Monitoring System (Optional)			1	

NOTES:

1. The costs for the FAT and OPT will not be used in the adjudication of this tender. Council reserves the right to negotiate these rates with the preferred Tenderers..

2. The power transformers above will be evaluated based on the total cost of ownership (TCO) over a period of 35 years. The Excel spreadsheet with a formula will be sent to all the bidders who attend the compulsory tender briefing meeting. This means that the price that will be used for evaluation purposes must be the one coming out of the TCO.

3. Each of these calculations must be printed and submitted with the tender document for each item on the power transformers.

4. The Msunduzi municipality will verify all the calculations.

THE MSUNDUZI MUNICIPALITY

SUPPLIES AND SERVICES CONTRACT No. E29 OF 26/27

THE DESIGN, MANUFACTURE, SUPPLY, DELIVERY, OFF-LOADING, ERECTION AND DRY-COMMISSIONING OF HIGH AND MEDIUM VOLTAGE POWER TRANSFORMERS AND ASSOCIATED EQUIPMENT

SUMMARY PAGE

Item No.	Description of Power Transformer	Price Each (Excluding VAT)	Price Each (Including VAT)	Delivery Period (Weeks)
1	45MVA ,132/33kV, Ynyn0, % impedance: 12.16			
2	40MVA, 132/11kV, Ynd1, % impedance: 11.5			
3	40MVA, 132/11kV, Ynyn0, % impedance: 17.36			
4	30MVA, 132/11KV, YnZn1, % impedance: 17.8			
5	30MVA, 132/11KV, Ynyn0, % impedance: 17.36			
6	30MVA, 132/11KV, Ynd1, % impedance: 15.8			
7	20MVA, 33/11kV Dyn1, % impedance:9.42			
8	15MVA, 33/11kV, Dyn1, % impedance: 10.4			
TOTAL SUM INCLDING VAT CARRIED TO TENDER FORM				

THE MSUNDUZI MUNICIPALITY

SUPPLIES AND SERVICES CONTRACT No. E29 OF 26/27

THE DESIGN, MANUFACTURE, SUPPLY, DELIVERY, OFF-LOADING, ERECTION AND DRY-COMMISSIONING OF HIGH AND MEDIUM VOLTAGE POWER TRANSFORMERS AND ASSOCIATED EQUIPMENT

SUMMARY OF PRICE SCHEDULE FOR NECRT'S

Item No.	DESCRIPTION	Total Supply and Install (Excl. VAT)	Total Supply and Install (Incl. VAT)	Delivery Period (Weeks)
1	11kV/300A NEC/NER/Auxiliary Transformer			
2	11kV/600A NEC/NER/Auxiliary Transformer			
3	11kV/960A NEC/NER/Auxiliary Transformer			
4	33kV/300A NEC/NER/Auxiliary Transformer			
5	33kV/600A NEC/NER/Auxiliary Transformer			
6	33kV/960A NEC/NER/Auxiliary Transformer			
TOTAL SUM INCLDING VAT CARRIED TO TENDER FORM				

NB: When submitting this tender, bidders are advised that regardless of the VAT status of being a VAT or non-VAT vendor the price must include VAT

Further to the above the price shall be deemed to be VAT inclusive regardless of whether the bidder is the VAT vendor or not.

Name of Tenderer: _____

Name of Signatory: _____

Capacity of Signatory: _____

Signature: _____ Date: _____

THE MSUNDUZI MUNICIPALITY

SUPPLIES AND SERVICES CONTRACT No. E29 OF 26/27

THE DESIGN, MANUFACTURE, SUPPLY, DELIVERY, OFF-LOADING, ERECTION AND DRY-COMMISSIONING OF HIGH AND MEDIUM VOLTAGE POWER TRANSFORMERS AND ASSOCIATED EQUIPMENT

DATA SHEET 1: INVITATION TO BID DOCUMENT

PART A

YOU ARE HEREBY INVITED TO BID FOR REQUIREMENTS OF THE MSUNDUZI MUNICIPALITY					
BID NUMBER:	E 29 OF 2026	CLOSING DATE:	17 DECEMBER 2026	CLOSING TIME:	12H00
DESCRIPTION	**THE DESIGN, MANUFACTURE, SUPPLY, DELIVERY, OFF-LOADING, ERECTION AND DRY-COMMISSIONING OF HIGH AND MEDIUM VOLTAGE POWER TRANSFORMERS AND ASSOCIATED EQUIPMENT**				
THE SUCCESSFUL BIDDER WILL BE REQUIRED TO FILL IN AND SIGN A WRITTEN CONTRACT FORM					
TENDER DOCUMENTS MUST BE SUBMITTED IN THE TENDER BOX SITUATED AT:					
THE MSUNDUZI MUNICIPALITY'S CENTRAL STORES					
2 ABATTOIR ROAD (OFF KERSHAW STREET)					
PIETERMARITZBURG					
3201					
SUPPLIER INFORMATION					
NAME OF BIDDER					
POSTAL ADDRESS					
STREET ADDRESS					
TELEPHONE NUMBER	CODE		NUMBER		
CELLPHONE NUMBER					
FACSIMILE NUMBER	CODE		NUMBER		
E-MAIL ADDRESS					
VAT REGISTRATION NUMBER					
TAX COMPLIANCE STATUS	TCS PIN:				
CSD REGISTRATION No:	MAAA				

ARE YOU THE ACCREDITED REPRESENTATIVE IN SOUTH AFRICA FOR THE GOODS /SERVICES /WORKS OFFERED?	☐Yes ☐No [IF YES ENCLOSE PROOF]	ARE YOU A FOREIGN BASED SUPPLIER FOR THE GOODS /SERVICES /WORKS OFFERED?	☐Yes ☐ No [IF YES, ANSWER PART B:3]
TOTAL NUMBER OF ITEMS OFFERED		**TOTAL BID PRICE**	
SIGNATURE OF BIDDER		**DATE**	
CAPACITY UNDER WHICH THIS BID IS SIGNED			

BIDDING PROCEDURE ENQUIRIES MAY BE DIRECTED TO:		**TECHNICAL INFORMATION MAY BE DIRECTED TO:**	
DEPARTMENT	SCM UNIT	DEPARTMENT	ELECTRICITY SUPPLY SERVICES
CONTACT PERSON	VINESH GOVENDER	CONTACT PERSON	LUNGISANI NTULI
TELEPHONE NUMBER	033 – 392 2027	TELEPHONE NUMBER	033 – 392 5790
CELLPHONE NUMBER		CELLPHONE NUMBER	082 724 3636
vinesh.govender@msunduzi.gov.za		E-MAIL ADDRESS: lungisani.ntuli@msunduzi.gov.za	

PART B

1.	**BID SUBMISSION:**
1.1.	BIDS MUST BE DELIVERED BY THE STIPULATED TIME TO THE CORRECT ADDRESS. LATE BIDS WILL NOT BE ACCEPTED FOR CONSIDERATION.
1.2.	ALL BIDS MUST BE SUBMITTED ON THE OFFICIAL FORMS PROVIDED – (NOT TO BE RE-TYPED).
1.3.	THIS BID IS SUBJECT TO THE PREFERENTIAL PROCUREMENT POLICY FRAMEWORK ACT AND THE PREFERENTIAL PROCUREMENT REGULATIONS, 2022, THE GENERAL CONDITIONS OF CONTRACT (GCC) AND, IF APPLICABLE, ANY OTHER SPECIAL CONDITIONS OF CONTRACT.
2.	**TAX COMPLIANCE REQUIREMENTS**
2.1	BIDDERS MUST ENSURE COMPLIANCE WITH THEIR TAX OBLIGATIONS.
2.2	BIDDERS ARE REQUIRED TO SUBMIT THEIR UNIQUE PERSONAL IDENTIFICATION NUMBER (PIN) ISSUED BY SARS TO ENABLE THE ORGAN OF STATE TO VIEW THE TAXPAYER'S PROFILE AND TAX STATUS.
2.3	APPLICATION FOR THE TAX COMPLIANCE STATUS (TCS) CERTIFICATE OR PIN MAY ALSO BE MADE VIA E-FILING. IN ORDER TO USE THIS PROVISION, TAXPAYERS WILL NEED TO REGISTER WITH SARS AS E-FILERS THROUGH THE WEBSITE WWW.SARS.GOV.ZA.
2.4	FOREIGN SUPPLIERS MUST COMPLETE THE PRE-AWARD QUESTIONNAIRE IN PART B:3.
2.5	BIDDERS MAY ALSO SUBMIT A PRINTED TCS CERTIFICATE TOGETHER WITH THE BID.
2.6	IN BIDS WHERE CONSORTIA / JOINT VENTURES / SUB-CONTRACTORS ARE INVOLVED, EACH PARTY MUST SUBMIT A SEPARATE TCS CERTIFICATE / PIN / CSD NUMBER.
2.7	WHERE NO TCS IS AVAILABLE BUT THE BIDDER IS REGISTERED ON THE CENTRAL SUPPLIER DATABASE (CSD), A CSD NUMBER MUST BE PROVIDED.
3.	**QUESTIONNAIRE TO BIDDING FOREIGN SUPPLIERS**
3.1.	IS THE ENTITY A RESIDENT OF THE REPUBLIC OF SOUTH AFRICA (RSA)? ☐ YES ☐ NO
3.2.	DOES THE ENTITY HAVE A BRANCH IN THE RSA? ☐ YES ☐ NO
3.3.	DOES THE ENTITY HAVE A PERMANENT ESTABLISHMENT IN THE RSA? ☐ YES ☐ NO
3.4.	DOES THE ENTITY HAVE ANY SOURCE OF INCOME IN THE RSA? ☐ YES ☐ NO
3.5.	IS THE ENTITY LIABLE IN THE RSA FOR ANY FORM OF TAXATION? ☐ YES ☐ NO

IF THE ANSWER IS "NO" TO ALL OF THE ABOVE, THEN IT IS NOT A REQUIREMENT TO REGISTER FOR A TAX COMPLIANCE STATUS SYSTEM PIN CODE FROM THE SOUTH AFRICAN REVENUE SERVICE (SARS) AND IF NOT REGISTER AS PER 2.3 ABOVE.

NB: FAILURE TO PROVIDE ANY OF THE ABOVE PARTICULARS MAY RENDER THE BID INVALID. NO BIDS WILL BE CONSIDERED FROM PERSONS IN THE SERVICE OF THE STATE.

SIGNATURE OF BIDDER: ……

CAPACITY UNDER WHICH THIS BID IS SIGNED: ……

DATE: ……

THE MSUNDUZI MUNICIPALITY

SUPPLIES AND SERVICES CONTRACT No. E29 OF 26/27

THE DESIGN, MANUFACTURE, SUPPLY, DELIVERY, OFF-LOADING, ERECTION AND DRY-COMMISSIONING OF HIGH AND MEDIUM VOLTAGE POWER TRANSFORMERS AND ASSOCIATED EQUIPMENT

DATA SHEET 2: AUTHORITY TO SIGN DOCUMENT

I/We*, the undersigned, am/are* duly authorised to sign the tender document on behalf of

.....

by virtue of the Articles of Association/Resolution of the Board of Directors*, of which a certified copy is attached, or .....

Full Name of Signatory: .....

Capacity of Signatory: .....

Signature: .....

Date: .....

Witnesses:

(1) Full Name: .....

Signature: .....Date.....

(2) Full Name: .....

Signature: .....Date.....

* ***Delete whichever is inapplicable or complete as indicated if none are applicable.***

THE MSUNDUZI MUNICIPALITY

SUPPLIES AND SERVICES CONTRACT No. E29 OF 26/27

THE DESIGN, MANUFACTURE, SUPPLY, DELIVERY, OFF-LOADING, ERECTION AND DRY-COMMISSIONING OF HIGH AND MEDIUM VOLTAGE POWER TRANSFORMERS AND ASSOCIATED EQUIPMENT

DATA SHEET 3: DECLARATION OF MUNICIPAL FEES

I/We do hereby declare that the Municipal Fees of ***(Full Name of Tenderer):***

_____

_____

Is/are, as at the date of the tender closing, fully paid up, or arrangements have been concluded with the Municipality to pay the said Fees:

DESCRIPTION	**ACCOUNT No.**
Electricity	_____
Water	_____
Rates	_____

NB: Attach a copy of the current Utility Bill.

I/We acknowledge that should it be found that the Municipal Fees are not up to date, the Council may take such remedial action as it required, including termination of contract, and any income due to the Contractor shall be utilised to offset any monies due to the Council.

NB: If the Service Provider is leasing the premises, a copy of the Lease Agreement must be submitted for adjudication purposes.

Full Name of Signatory.....

Capacity of Signatory.....

I.D. Number.....

Duly authorised to sign on behalf of.....

……

Physical Address.....

….....

…….....

Signature …… Date ……...

THE MSUNDUZI MUNICIPALITY

SUPPLIES AND SERVICES CONTRACT No. E29 OF 26/27

THE DESIGN, MANUFACTURE, SUPPLY, DELIVERY, OFF-LOADING, ERECTION AND DRY-COMMISSIONING OF HIGH AND MEDIUM VOLTAGE POWER TRANSFORMERS AND ASSOCIATED EQUIPMENT

DATA SHEET 4: DECLARATION OF INTEREST

1. No bid will be accepted from persons in the service of the state[1].

2. Any person, having a kinship with persons in the service of the state, including a blood relationship, may make an offer or offers in terms of this invitation to bid. In view of possible allegations of favouritism, should the resulting bid, or part thereof, be awarded to persons connected with or related to persons in service of the state, it is required that the bidder or their authorised representative declare their position in relation to the evaluating/adjudicating authority.

3. **In order to give effect to the above, the following questionnaire must be completed and submitted with the bid.**

   3.1 Full Name of bidder or his or her representative: ……..

   ……

   3.2 Identity Number: ……..

   3.3 Position occupied in the Company (director, trustee shareholder[2]):

   ……

   3.4 Company Registration Number: ……

   3.5 Tax Reference Number: ……

   3.6 VAT Registration Number: ……

   3.7 The names of all directors / trustees / shareholders members, their individual identity numbers and state employee numbers must be indicated in paragraph 4 below.

   3.8 Are you presently in the service of the state? **YES / NO**

   3.8.1 If yes, furnish particulars. ……..…..

   ……

[1]MSCM Regulations: "in the service of the state" means to be –
(a) a member of –
   (i) any municipal council;
   (ii) any provincial legislature; or
   (iii) the national Assembly or the national Council of provinces;
(b) a member of the board of directors of any municipal entity;

(c) an official of any municipality or municipal entity;
(d) an employee of any national or provincial department, national or provincial public entity or constitutional institution within the meaning of the Public Finance Management Act, 1999 (Act No.1 of 1999);
(e) a member of the accounting authority of any national or provincial public entity; or
(f) an employee of Parliament or a provincial legislature.

''Shareholder" means a person who owns shares in the company and is actively involved in the management of the company or business and exercises control over the company.

3.9 Have you been in the service of the state for the past twelve months? **YES / NO**

3.9.1 If yes, furnish particulars ……..…….

……

3.10 Do you have any relationship (family, friend, other) with persons in the service of the state and who may be involved with the evaluation and or adjudication of this bid? **YES / NO**

3.10.1If yes, furnish particulars ……..……..

…….....

3.11 Are you, aware of any relationship (family, friend, other) between any other bidder and any persons in the service of the state who may be involved with the evaluation and/or adjudication of this bid? **YES / NO**

3.11.1 If yes, furnish particulars ……..……...……...

…….....

3.12 Are any of the company's directors, trustees, managers, principle shareholders, or stakeholders in service of the state? **YES / NO**

3.12.1 If yes, furnish particulars ……..……..……..

…….....

3.13 Are any spouse, child or parent of the company's directors trustees, managers, principle shareholders or stakeholders in service of the state? **YES / NO**

3.13.1 If yes, furnish particulars ……..……..……..

…….....

3.14 Do you or any of the directors, trustees, managers, principle shareholders, or stakeholders of this company have any interest in any other related companies or business whether or not they are bidding for this contract? **YES / NO**

3.14.1 If yes, furnish particulars …….

……

4. Full details of Directors / Trustees / Members / Shareholders.

Full Name	Identity Number	State Employee Number

CERTIFICATION

I, THE UNDERSIGNED, (NAME) ……

CERTIFY THAT THE INFORMATION FURNISHED ON THIS DECLARATION FORM IS CORRECT.

I ACCEPT THAT THE STATE MAY ACT AGAINST ME SHOULD THIS DECLARATION PROVE TO BE FALSE.

…….. ……..
Signature Date

……..... …….
Position Name of Bidder

THE MSUNDUZI MUNICIPALITY

SUPPLIES AND SERVICES CONTRACT No. E29 OF 26/27

THE DESIGN, MANUFACTURE, SUPPLY, DELIVERY, OFF-LOADING, ERECTION AND DRY-COMMISSIONING OF HIGH AND MEDIUM VOLTAGE POWER TRANSFORMERS AND ASSOCIATED EQUIPMENT

DATA SHEET 5: DECLARATION OF BIDDER'S PAST SUPPLY CHAIN MANAGEMENT PRACTICES

1 This Municipal Bidding Document must form part of all bids invited.

2 It serves as a declaration to be used by municipalities and municipal entities in ensuring that when goods and services are being procured, all reasonable steps are taken to combat the abuse of the supply chain management system.

3 The bid of any bidder may be rejected if that bidder, or any of its directors have:

a. abused the municipality's / municipal entity's supply chain management system or committed any improper conduct in relation to such system;
b. been convicted for fraud or corruption during the past five years;
c. willfully neglected, reneged on or failed to comply with any government, municipal or other public sector contract during the past five years; or
d. been listed in the Register for Tender Defaulters in terms of section 29 of the Prevention and Combating of Corrupt Activities Act (No 12 of 2004).

4 In order to give effect to the above, the following questionnaire must be completed and submitted with the bid.

Item	Question	Yes	No
4.1	Is the bidder or any of its directors listed on the National Treasury's Database of Restricted Suppliers as companies or persons prohibited from doing business with the public sector? (Companies or persons who are listed on this Database were informed in writing of this restriction by the Accounting Officer/Authority of the institution that imposed the restriction after the *audi alteram partem* rule was applied). **The Database of Restricted Suppliers now resides on the National Treasury's website (www.treasury.gov.za) and can be accessed by clicking on its link at the bottom of the home page.**	Yes ☐	No ☐
4.1.1	If so, furnish particulars:		

4.2	Is the bidder or any of its directors listed on the Register for Tender Defaulters in terms of section 29 of the Prevention and Combating of Corrupt Activities Act (No 12 of 2004)? **The Register for Tender Defaulters can be accessed on the National Treasury's website (www.treasury.gov.za) by clicking on its link at the bottom of the home page.**	Yes ☐	No ☐
4.2.1	If so, furnish particulars:		
4.3	Was the bidder or any of its directors convicted by a court of law (including a court of law outside the Republic of South Africa) for fraud or corruption during the past five years?	Yes ☐	No ☐
4.3.1	If so, furnish particulars:		
4.4	Does the bidder or any of its directors owe any municipal rates and taxes or municipal charges to the municipality / municipal entity, or to any other municipality / municipal entity, that is in arrears for more than three months?	Yes ☐	No ☐
4.4.1	If so, furnish particulars:		
4.5	Was any contract between the bidder and the municipality / municipal entity or any other organ of state terminated during the past five years on account of failure to perform on or comply with the contract?	Yes ☐	No ☐
4.7.1	If so, furnish particulars:		

CERTIFICATION

I, THE UNDERSIGNED, (NAME) ……

CERTIFY THAT THE INFORMATION FURNISHED ON THIS DECLARATION FORM IS CORRECT.

I ACCEPT THAT THE STATE MAY ACT AGAINST ME SHOULD THIS DECLARATION PROVE TO BE FALSE.

…….. ……..
Signature Date

……..... …….
Position Name of Bidder

THE MSUNDUZI MUNICIPALITY

SUPPLIES AND SERVICES CONTRACT No. E29 OF 26/27

THE DESIGN, MANUFACTURE, SUPPLY, DELIVERY, OFF-LOADING, ERECTION AND DRY-COMMISSIONING OF HIGH AND MEDIUM VOLTAGE POWER TRANSFORMERS AND ASSOCIATED EQUIPMENT

DATA SHEET 6: CERTIFICATE OF INDEPENDENT BID DETERMINATION

1. This Municipal Bidding Document (MBD) must form part of all bids[1] invited.

2. Section 4 (1) (b) (iii) of the Competition Act No. 89 of 1998, as amended, prohibits an agreement between, or concerted practice by firms, or a decision by an association of firms, if it is between parties in a horizontal relationship and if it involves collusive bidding (or bid rigging).[2] Collusive bidding is a *per se* prohibited meaning that it cannot be justified under any grounds.

3. Municipal Supply Regulation 38 (1) prescribes that a supply chain management policy must provide measures for the combating of abuse of the supply chain management system, and must enable the accounting officer, among others, to:

   a. take all reasonable steps to prevent such abuse;

   b. reject the bid of any bidder if that bidder or any of its directors has abused the supply chain management system of the municipality or municipal entity or has committed any improper conduct in relation to such system; and

   c. cancel a contract awarded to a person if the person committed any corrupt or fraudulent act during the bidding process or the execution of the contract.

4 This MBD serves as a certificate of declaration that would be used by institutions to ensure that, when bids are considered, reasonable steps are taken to prevent any form of bid-rigging.

5 In order to give effect to the above, the attached Certificate of Bid Determination (MBD 9) must be completed and submitted with the bid:

[1] Includes price quotations, advertised competitive bids, limited bids and proposals.

[2] Bid rigging (or collusive bidding) occurs when businesses, that would otherwise be expected to compete, secretly conspire to raise prices or lower the quality of goods and / or services for purchasers who wish to acquire goods and / or services through a bidding process. Bid rigging is, therefore, an agreement between competitors not to compete.

CERTIFICATE OF INDEPENDENT BID DETERMINATION

I, the undersigned, in submitting the accompanying bid:

_____
(Bid Number and Description)

in response to the invitation for the bid made by:

_____
(Name of Municipality / Municipal Entity)
do hereby make the following statements that I certify to be true and complete in every respect:

I certify, on behalf of:_____ that:
(Name of Bidder)

1. I have read and I understand the contents of this Certificate;
2. I understand that the accompanying bid will be disqualified if this Certificate is found not to be true and complete in every respect;
3. I am authorized by the bidder to sign this Certificate, and to submit the accompanying bid, on behalf of the bidder;
4. Each person whose signature appears on the accompanying bid has been authorized by the bidder to determine the terms of, and to sign, the bid, on behalf of the bidder;
5. For the purposes of this Certificate and the accompanying bid, I understand that the word "competitor" shall include any individual or organization, other than the bidder, whether or not affiliated with the bidder, who:
    (a) has been requested to submit a bid in response to this bid invitation;
    (b) could potentially submit a bid in response to this bid invitation, based on their qualifications, abilities or experience; and
    (c) provides the same goods and services as the bidder and/or is in the same line of business as the bidder
6. The bidder has arrived at the accompanying bid independently from, and without consultation, communication, agreement or arrangement with any competitor. However communication between partners in a joint venture or consortium[3] will not be construed as collusive bidding.
7. In particular, without limiting the generality of paragraphs 6 above, there has been no consultation, communication, agreement or arrangement with any competitor regarding:
    (a) prices;
    (b) geographical area where product or service will be rendered (market allocation)
    (c) methods, factors or formulas used to calculate prices;
    (d) the intention or decision to submit or not to submit, a bid;
    (e) the submission of a bid which does not meet the specifications and conditions of the bid; or
    (f) bidding with the intention not to win the bid.
8. In addition, there have been no consultations, communications, agreements or arrangements with any competitor regarding the quality, quantity, specifications and conditions or delivery particulars of the products or services to which this bid invitation relates.
9. The terms of the accompanying bid have not been, and will not be, disclosed by the bidder, directly or indirectly, to any competitor, prior to the date and time of the official bid opening or of the awarding of the contract.

[3] Joint venture or Consortium means an association of persons for the purpose of combining their expertise, property, capital, efforts, skill and knowledge in an activity for the execution of a contract.

10. I am aware that, in addition and without prejudice to any other remedy provided to combat any restrictive practices related to bids and contracts, bids that are suspicious will be reported to the Competition Commission for investigation and possible imposition of administrative penalties in terms of section 59 of the Competition Act No 89 of 1998 and or may be reported to the National Prosecuting Authority (NPA) for criminal investigation and or may be restricted from conducting business with the public sector for a period not exceeding ten (10) years in terms of the Prevention and Combating of Corrupt Activities Act No 12 of 2004 or any other applicable legislation.

……	……
Signature	Date
……	……
Position	Name of Bidder

THE MSUNDUZI MUNICIPALITY

SUPPLIES AND SERVICES CONTRACT No. E29 OF 26/27

THE DESIGN, MANUFACTURE, SUPPLY, DELIVERY, OFF-LOADING, ERECTION AND DRY-COMMISSIONING OF HIGH AND MEDIUM VOLTAGE POWER TRANSFORMERS AND ASSOCIATED EQUIPMENT

DATA SHEET 7: DECLARATION FOR PROCUREMENT ABOVE R10 MILLION (ALL APPLICABLE TAXES INCLUDED)

For all procurement expected to exceed R10 million (all applicable taxes included), bidders must complete the following questionnaire:

***** Delete if not applicable

1. Are you by law required to prepare annual financial statements for auditing?

   ***YES / NO**

1.1 If yes, submit audited annual financial statements for the past three years or since the date of establishment if established during the past three years.

   ……..

   ……..

2. Do you have any outstanding undisputed commitments for municipal services towards any municipality for more than three months or any other Service Provider in respect of which payment is overdue for more than 30 days?

   ***YES / NO**

2.1 If no, this serves to certify that the bidder has no undisputed commitments for municipal services towards any municipality for more than three months or other Service Provider in respect of which payment is overdue for more than 30 days.

2.2 If yes, provide particulars.

   ……

   ……

3. Has any contract been awarded to you by an organ of state during the past five years, including particulars of any material non-compliance or dispute concerning the execution of such contract?

   ***YES / NO**

3.1 If yes, furnish particulars

   ……

   ……

4. Will any portion of goods or services be sourced from outside the Republic, and, if so, what portion and whether any portion of payment from the municipality / municipal entity is expected to be transferred out of the Republic?

*__YES / NO__

4.1 If yes, furnish particulars

……

……

CERTIFICATION

I, THE UNDERSIGNED, (NAME) ……

CERTIFY THAT THE INFORMATION FURNISHED ON THIS DECLARATION FORM IS CORRECT.

I ACCEPT THAT THE STATE MAY ACT AGAINST ME SHOULD THIS DECLARATION PROVE TO BE FALSE.

…….. ……..
Signature Date

……..... …….
Position Name of Bidder

THE MSUNDUZI MUNICIPALITY

SUPPLIES AND SERVICES CONTRACT No. E29 OF 26/27

THE DESIGN, MANUFACTURE, SUPPLY, DELIVERY, OFF-LOADING, ERECTION AND DRY-COMMISSIONING OF HIGH AND MEDIUM VOLTAGE POWER TRANSFORMERS AND ASSOCIATED EQUIPMENT

DATA SHEET 8: TENDER BRIEFING AND SITE INSPECTION CERTIFICATE

As required in terms of this document, I/we attended the compulsory Tender Briefing and Site Inspection on the date specified below.

I/We carefully examined the contract document and have made myself/ourselves fully conversant with all the circumstances likely to influence this contract.

I/We further certify that I am/we are satisfied with the description of the Works and the explanation given by the Project Champion or his/her representative at the Tender Briefing and Site Inspection, and that I/we perfectly understand the work to be done, as specified and implied, in the execution of the contract.

NAME OF SERVICE PROVIDER : _____

NAME OF SIGNATORY : _____

ADDRESS : _____

_____

_____

_____

TENDER BRIEFING AND SITE INSPECTION CERTIFICATE

This certifies that _____(Name)

Representing _____(Firm)

Attended the Tender Briefing and Site Inspection for this contract on

_____(Date)

SIGNED BY PERSON ATTENDING THE MEETING: _____

SIGNED: _____

Project Champion

THE MSUNDUZI MUNICIPALITY

SUPPLIES AND SERVICES CONTRACT No. E29 OF 26/27

THE DESIGN, MANUFACTURE, SUPPLY, DELIVERY, OFF-LOADING, ERECTION AND DRY-COMMISSIONING OF HIGH AND MEDIUM VOLTAGE POWER TRANSFORMERS AND ASSOCIATED EQUIPMENT

TENDER FORM

The Municipal Manager
City Hall
PIETERMARITZBURG
3201

Dear Sir,

Having examined the Conditions of Tender, Specifications, Tender and Legislation of the above contract, I/we offer to supply and deliver the whole of the said Works in conformity with the Conditions of Tender, Specifications, Tender and Legislation, save as amended by any modifications as set out in Annexure "A" herein, for the prices as indicated on the Pricing Schedule herein, the **Total Sum/s (including VAT)** being as follows:

Section 1	
Total Tendered Price Including VAT	R

In Words_____

_____

Section 2	
Total Tendered Price Including VAT	R

In Words_____

_____

Section 3	
Total Tendered Price Including VAT	R

In Words_____

_____

Section 4	
Total Tendered Price Including VAT	R

In Words_____

Section 5	
Total Tendered Price Including VAT	R

In Words_____

Section 6	
Total Tendered Price Including VAT	R

In Words_____

Section 7	
Total Tendered Price Including VAT	R

In Words_____

Section 8	
Total Tendered Price Including VAT	R

In Words_____

Section 9	
Total Tendered Price Including VAT	R

In Words_____

Summary Page 1	
Total Tendered Price Including VAT	R

In Words_____

Summary Page 1	
Total Tendered Price Including VAT	R

In Words_____

_____

In the event of there being any errors of extension or addition to the prices in the Pricing Schedule, I/we agree to their being corrected, the unit prices being taken as correct.

I/We are registered VAT vendors. I/We agree to undertake the works within the time frames as stated in this contract document.

I/We certify that I/we have satisfied myself/ourselves that the particulars inserted on all required Affidavits (if applicable) are complete and correct.

I/We confirm that I am/we are fully acquainted with the current South African laws and regulations applicable to this contract including inter alia those laws to which my/our attention has been drawn in the Legislation section of this document.

I/We are registered VAT vendors and my/our VAT vendor registration number is:

_____

I/We are formally associated by written agreement with the following firms, corporations or companies:

_____

(Enter Nil if no affiliations)

I/We are fully paid-up members in good standing of the following organisation(s):

_____

(Enter Nil if no affiliations)

I/We bank at the _____

Branch of _____

Where I/we have a _____ account.

My/Our Tender Deposit receipt number as issued by the Council is _____
(Include a copy of the Tender Deposit Receipt when purchased at the Msunduzi Municipality)

It is agreed and understood that should there be any changes on the banking details provided for the entity, a duly signed resolution by all its directors and minutes whereby a resolution for changing the banking details was passed will be submitted to Council including the original letter from the bank confirming the details.

It is agreed and understood that this tender is valid for four (4) months from the date hereof and that it, together with your final letter of acceptance, shall constitute a binding Contract between us.

I/We understand that the Council is not bound to accept the highest or any tender and acknowledge that the Head: Supply Chain Management may, in her absolute discretion if good and sufficient grounds are brought to her attention in writing within five (5) working days from the date of closing of tenders, decline to consider my/our offer.

I/We the undersigned, warrants that I am/we are duly authorised to do so on behalf of the enterprise, certifies that the enterprise complies with all statutory and municipal requirements and that the information supplied in terms of this documents with additional information is correct and accurate and acknowledges that if the information supplied is found to be incorrect then the Msunduzi Municipality in addition to any remedies, it may have: may

i Recover from the Enterprise all costs, losses or damages incurred or sustained by the Municipality as result of the award of the contract, and /or
ii Cancel the contract and claim any damages which the Municipality may suffer by having to make less favourable arrangements after such cancellations, and/or
iii Impose a penalty on the Enterprise as provided in the Tender Document, and/or
iv Take any other action as may be deemed necessary.

I/we further undertake to submit documentary proof regarding any tendering issue to the Council when so required.

Full Name of Signatory.....

Capacity of Signatory.....

Identity Number.....

Duly authorised to sign on behalf of.....

Physical Address.....

SIGNATURE..... DATE.....

ANNEXURE "A"

THE MSUNDUZI MUNICIPALITY

SUPPLIES AND SERVICES CONTRACT No. E29 OF 26/27

THE DESIGN, MANUFACTURE, SUPPLY, DELIVERY, OFF-LOADING, ERECTION AND DRY-COMMISSIONING OF HIGH AND MEDIUM VOLTAGE POWER TRANSFORMERS AND ASSOCIATED EQUIPMENT

ALTERATIONS BY SERVICE PROVIDER

Should the Tenderer desire to make any departures from or modifications to the Standard Conditions of Contract or Specification, or to qualify his/her tender in any way, he/she shall set out his/her proposals clearly hereunder or, alternatively, state them in a covering letter attached to his/her tender and referred to hereunder, failing which the tender will be deemed to be unqualified.

If no departures or modifications are desired, the Schedule hereunder is to be marked NIL and signed by the Tenderer.

PAGE	SECTION OR ITEM	PROPOSED DEPARTURE/MODIFICATION

SIGNATURE..... DATE.....

ANNEXURE "B"

THE MSUNDUZI MUNICIPALITY

SUPPLIES AND SERVICES CONTRACT No. E29 OF 26/27

THE DESIGN, MANUFACTURE, SUPPLY, DELIVERY, OFF-LOADING, ERECTION AND DRY-COMMISSIONING OF HIGH AND MEDIUM VOLTAGE POWER TRANSFORMERS AND ASSOCIATED EQUIPMENT

PREFERENCE POINTS CLAIM FORM IN TERMS OF THE PREFERENTIAL PROCUREMENT REGULATIONS 2022

This preference form must form part of all bids invited. It contains general information and serves as a claim form for preference points for specific goals.

NB: BEFORE COMPLETING THIS FORM, BIDDERS MUST STUDY THE GENERAL CONDITIONS, DEFINITIONS AND DIRECTIVES APPLICABLE IN RESPECT OF THE TENDER AND PREFERENTIAL PROCUREMENT REGULATIONS, 2022.

---

1. GENERAL CONDITIONS

1.1 The following preference point systems are applicable to all bids:

- The 80/20 system for requirements with a Rand value of up to R50 000 000 (all applicable taxes included); and
- The 90/10 system for requirements with a Rand value above R50 000 000 (all applicable taxes included).

1.2 The value of this bid is estimated to not exceed R50 000 000 (all applicable taxes included) and therefore the 80/20 Preference Point System shall be applicable.

1.3 Points for this bid shall be awarded for:

(a) Price; and

(b) Specific Goals.

The maximum points for this bid are allocated as follows:	**POINTS**
PRICE	**80**
SPECIFIC GOALS	**20**
TOTAL POINTS FOR PRICE AND SPECIFIC GOALS MUST NOT EXCEED	**100**

1.4 Failure on the part of a bidder to submit proof or documentation required in terms of this tender to claim points for specific goals, if the bidder did not submit proof or documentation required to claim for specific goals will be interpreted to mean that preference points for specific goals are not claimed.

1.5 The organ of state reserves the right to require of a Service Provider, either before a bid is adjudicated or at any time subsequently, to substantiate any claim in regard to preferences, in any manner required by the organ of state.

2. DEFINITIONS

(a) **"Broad-Based Black Economic Empowerment Act"** means the Broad-Based Black Economic Empowerment Act, 2003 (Act No. 53 of 2003);

(b) **"EME"** means an Exempted Micro Enterprise in terms of a code of good practice on black economic empowerment issued in terms of section 9 (1) of the Broad-Based Black Economic Empowerment Act;

(c) **"Functionality"** means the ability of a Service Provider to provide goods or services in accordance with specifications as set out in the tender documents.

(d) "**highest acceptable tender"** means a tender that complies with all specifications and conditions of tender and that has the highest price compared to other tenders;

(e) **"lowest acceptable tender"** means a tender that complies with all specifications and conditions of tender and that has lowest price compared to other tenders;

(f) **"price"** means amount of money tendered for good or services, and includes all applicable taxes less all unconditional discounts;

(g) **"QSE"** means a qualifying small business enterprise in terms of a code of good practice on black economic empowerment issued in terms of section 9 (1) of the Broad-Based Black Economic Empowerment Act;

(h) **"Rand Value"** means the total estimated value of a contract in Rand, calculated at the time of bid invitation;

(i) **"specific goals"** means specific goals as contemplated in section 2(1)(d) of the Act which may include contracting with persons, or categories of persons, historically disadvantaged by unfair discrimination on the basis of race, gender and disability including the implementation of programmes of the Reconstruction and Development Programme as published in Government Gazette No. 16085 dated 23 November 1994;

(j) **"tender"** means a written offer in the form determined by an organ of state in response to an invitation to provide goods or services through price quotations, competitive tendering process or any other method envisaged in legislation;

(k) **"tender for income-generating contracts"** means a written offer in the form determined by an organ of state in response to an invitation for the origination of income-generating contracts through any method envisaged in legislation that will result in a legal agreement between the organ of state and a third party that produces revenue for the organ of state, and includes, but is not limited to, leasing and disposal of assets and concession contracts, excluding direct sales and disposal of assets through public auctions;

3. FORMULAE FOR PROCUREMENT OF GOODS AND SERVICES

3.1 POINTS AWARDED FOR PRICE

3.1.1 THE 80/20 OR 90/10 PREFERENCE POINT SYSTEMS

A maximum of 80 or 90 points is allocated for price on the following basis:

80/20 **or** **90/10**

$$Ps = 80\left(1 - \frac{Pt - P\min}{P\min}\right) \quad \text{or} \quad Ps = 90\left(1 - \frac{Pt - P\min}{P\min}\right)$$

Where: -

Ps = Points scored for price of bid under consideration

Pt = Price of bid under consideration

Pmin = Price of lowest acceptable bid

3.2 FORMULAE FOR DISPOSAL OR LEASING OF STATE ASSETS AND INCOME GENERATING PROCUREMENT

3.2.1 POINTS AWARDED FOR PRICE

A maximum of 80 or 90 points is allocated for price on the following basis:

80/20 **or** **90/10**

$$Ps = 80\left(1 + \frac{Pt - P\max}{P\max}\right) \quad \text{or} \quad Ps = 90\left(1 + \frac{Pt - P\max}{P\max}\right)$$

Where: -

Ps = Points scored for price of bid under consideration

Pt = Price of bid under consideration

Pmax = Price of highest acceptable tender

4. POINTS AWARDED FOR SPECIFIC GOALS

4.1 In terms of Regulation 4(2); 5(2); 6(2) and 7(2) of the Preferential Procurement Regulations, preference points must be awarded for specific goals stated in the tender.

4.2 For the purpose of this tender points will be allocated in accordance with the specific goals as outlined in the Tender Document specification contained herein and must be supported by proof /documentation as stated therein.

4.3 In cases where organs of state intend to use Regulation 3(2) of the Regulations, which states that, if it is unclear whether the 80/20 or 90/10 preference point system applies, an organ of state must, in the tender documents, stipulate in the case of—

(a) an invitation for tender for income-generating contracts, that either the 80/20 or 90/10 preference point system will apply and that the highest acceptable tender will be used to determine the applicable preference point system; or

(b) any other invitation for tender, that either the 80/20 or 90/10 preference point system will apply and that the lowest acceptable tender will be used to determine the applicable preference point system, then the organ of state must indicate the points allocated for specific goals for both the 90/10 and 80/20 preference point system.

5. SUB-CONTRACTING

5.1 Will any portion of the contract be sub-contracted?

(***Tick applicable box***)

YES		NO	

5.1.1 If yes, indicate:

i) What percentage of the contract will be subcontracted.....……%?

ii) The name of the sub-contractor……

……

iii) Whether the sub-contractor is an EME or QSE

(***Tick applicable box***)

YES		NO	

iv) Specify, by ticking the appropriate box, if subcontracting with an enterprise in terms of Preferential Procurement Regulations,2022:

Designated Group: An EME or QSE which is at last 51% owned by:	**EME** √	**QSE** √
Black people		
Black people who are youth		
Black people who are women		
Black people with disabilities		
Black people living in rural or underdeveloped areas or townships		
Co-operative owned by black people		
Black people who are military veterans		
OR		
Msunduzi EME		
Msunduzi Manufacturing Enterprise		
Location of a Business Enterprise		

6. **DECLARATION WITH REGARD TO COMPANY/FIRM**

6.1 Name of company/firm……

6.2 VAT registration number……

6.3 Company registration number……

6.4 TYPE OF COMPANY/ FIRM

- □ Partnership/Joint Venture / Consortium
- □ One-person business/sole propriety
- □ Close corporation
- □ Company
- □ (Pty) Limited
- □ Non-Profit Company

[TICK APPLICABLE BOX]

6.5 DESCRIBE PRINCIPAL BUSINESS ACTIVITIES

……
……
……
……

6.6 COMPANY CLASSIFICATION *[TICK APPLICABLE BOX]*

- ☐ Manufacturer
- ☐ Supplier
- ☐ Professional Service Provider
- ☐ Other Service Providers, e.g. transporter, etc.

6.7 MUNICIPAL INFORMATION

Municipality where business is situated…..……...…….

Registered Account Number: ……...…….

Stand Number: ……...……

6.8 Total number of years the company/firm has been in business……

6.9 I/we, the undersigned, who is / are duly authorised to do so on behalf of the company/firm, certify that the points claimed, based on specific goals as advised in the tender, qualifies the company/ firm for the preference(s) shown and I / we acknowledge that:

i) The information furnished is true and correct;

ii) The preference points claimed are in accordance with the General Conditions as indicated in paragraph 1 of this form;

iii) In the event of a contract being awarded as a result of points claimed as shown in paragraphs 1.4 and 5.2, the contractor may be required to furnish documentary proof to the satisfaction of the purchaser that the claims are correct;

iv) If the specific goals have been claimed or obtained on a fraudulent basis or any of the conditions of contract have not been fulfilled, the purchaser may, in addition to any other remedy it may have –

(a) disqualify the person from the bidding process;

(b) recover costs, losses or damages it has incurred or suffered as a result of that person's conduct;

(c) cancel the contract and claim any damages which it has suffered as a result of having to make less favourable arrangements due to such cancellation;

(d) recommend that the bidder or contractor, its shareholders and directors, or only the shareholders and directors who acted on a fraudulent basis, be restricted by the National Treasury from obtaining business from any organ of state for a period not exceeding 10 years, after the *audi alteram partem* (hear the other side) rule has been applied; and

(e) forward the matter for criminal prosecution.

SIGNATURE(S) OF BIDDER(S)……

DATE:
…….....

ADDRESS: ….....…….....

.....……
…

WITNESSES:

1……...……...

2.…….....……..

ANNEXURE C

POWER TRANSFORMER DELIVERY SCHEDULE

PRELIMINARY PROGRAMME

The Tenderer shall detail below or attach a preliminary programme reflecting the proposed sequence and method of execution of the various activities comprising the work for this Contract.

The programme shall be in accordance with the information supplied in the Contract Scope of Work, the requirements of the Project Specifications and with all other aspects of his/her Tender.

PROGRAMME

ACTIVITY/RESOURCE SCHEDULE	**WEEKS**									
CASH FLOW	**WEEKS**									

Note: The programme must be based on the completion time as specified in the Contract Data. Any other completion time that may be indicated on this programme will be regarded as an alternative offer, unless it is listed in Table (b) of Form 18 hereafter and supported by a detailed statement to that effect, all as specified in the Tender Data

NAME OF TENDERER: .....……...……...

NAME OF SIGNATORY: .....……...……...

CAPACITY OF SIGNATORY: .....……...……...

SIGNATURE: ……DATE……..

(Of person authorized to sign on behalf of the Tenderer)

ANNEXURE D

KEY PERSONNEL

The Tenderer must insert in the spaces provided below or attach a schedule, a list of all key personnel to be employed in the construction of the Works together with a resume of their experience with particular reference to the construction of similar Works.

The Tenderer shall attach the curriculum vitae and certified copies of certificates of the key personnel required for the execution of the works.

NUMBER	CATEGORY OF EMPLOYEE	NUMBER OF PERSONS			
		KEY PERSONNEL, PART OF THE CONTRACTOR'S ORGANISATION		KEY PERSONNEL TO BE IMPORTED IF NOT AVAILABLE LOCALLY	
		HDI	NON-HDI	HDI	NON-HDI
1					
2					
3					
4					
5					
6					
7					
8					
9					
10					
11					

Attach additional pages if more space is required

NAME OF TENDERER: .....

NAME OF SIGNATORY: .....

CAPACITY OF SIGNATORY: .....

SIGNATURE:
……DATE……..
(Of person authorized to sign on behalf of the Tenderer)

ANNEXURE E

PREVIOUS EXPERIENCE IN WORK OF THIS NATURE

Note: The contractor must provide the information required below with respect to his/her company's experience in the similar nature of work.

EMPLOYER: CONTACT PERSON AND TELEPHONE NUMBER	NATURE OF WORK	CONSULTANT: CONTACT PERSON AND TELEPHONE NUMBER	VALUE OF PROJECT AT START & COMPLETION STAGES (INCLUSIVE OF VAT)	COMPLETION DATE & INDICATE WHETHER COMPLETED IN TIME OR LATE (INCLUDING THE CURRENT PROJECT NOT YET COMPLETED)

Attach additional pages if more space is required

NAME OF TENDERER: .....

NAME OF SIGNATORY: .....

CAPACITY OF SIGNATORY: .....

SIGNATURE:
……DATE……..
(Of person authorized to sign on behalf of the Tenderer)

ANNEXURE F

CONTRACTOR'S HEALTH AND SAFETY DECLARATION

In terms of Clause 4(4) of the OHSA 1993 Construction Regulations 2003 (referred to as "the Regulations" hereafter), a Contractor may only be appointed to perform construction work if the Employer is satisfied that the Contractor has the necessary competencies and resources to carry out the work safely in accordance with the Occupational Health and Safety Act No 85 of 1993 and the OHSA 1993 Construction Regulations 2003.

To that effect a person duly authorised by the Tenderer must complete and sign the declaration hereafter in detail.

Declaration by Tenderer

1. I the undersigned hereby declare and confirm that I am fully conversant with the Occupational Health and Safety Act No 85 of 1993 (as amended by the Occupational Health and Safety Amendment Act No 181 of 1993), and the OHSA 1993 Construction Regulations 2003.

2. I hereby declare that my company has the competence and the necessary resources to safely carry out the construction work under this contract in compliance with the Construction Regulations and the Employer's Health and Safety Specifications.

3. I propose to achieve compliance with the Regulations by one of the following:

   a) From my own competent resources as detailed in 4(a) hereafter: .....YES / NO

   b) From my own resources still to be appointed or trained until competency is achieved, as detailed in 4(b) hereafter: ..... YES / NO

   c) From outside sources by appointment of competent specialist subcontractors as detailed in 4(c) hereafter: .....YES / NO

   (* = *delete whatever is not applicable*)

4. Details of resources proposed:

   (Note: Competent resources shall include safety personnel such as a construction supervisor and construction safety officer as defined in Regulation 6, and competent persons as defined in the OHSA 1993 Construction Regulations 2003, as applicable to this contract)

5. Details of the competent and qualified key persons from my company's own resources, who will form part of the contract team:

NAMES OF COMPETENT PERSONS	POSITIONS TO BE FILLED BY COMPETENT PERSONS

6. Details of training of persons from my company's own resources (or to be hired) who still have to be trained to achieve the necessary competency:

   (i) By whom will training be provided? .....

   (ii) When will training be undertaken?.....

   (iii) List the positions to be filled by persons to be trained or hired:

   .....

   .....

7. Details of competent resources to be appointed as subcontractors if competent persons cannot be supplied from own company:

   Name of proposed subcontractor:

   .....
   ..

   Qualifications or details of competency of the subcontractor:

   .....
   ..

   .....
   ..

8. I hereby undertake, if my tender is accepted, to provide, before commencement of the works under the contract, a suitable and sufficiently documented Health and Safety Plan in accordance with Regulation 5(1) of the Construction Regulations, which plan shall be subject to approval by the Employer.

9. I confirm that copies of my company's approved Health and Safety Plan, the Employer's Safety Specifications as well as the OHSA 1993 Construction Regulations 2003 will be provided on site and will at all times be available for inspection by the Contractor's personnel, the Employer's personnel, the Engineer, visitors, and officials and inspectors of the Department of Labour.

10. I hereby confirm that adequate provision has been made in my tendered rates and prices in the schedule of quantities to cover the cost of all resources, actions, training and all health and safety measures envisaged in the OHSA 1993 Construction Regulations 2003, and that I will be liable for any penalties that may be applied in terms of the said Regulations (Regulation 30) for failure on the Contractor's part to comply with the provisions of the Act and the Regulations.

11. I agree that my failure to complete and execute this declaration to the satisfaction of the Employer will mean that I am unable to comply with the requirements of the OHSA 1993 Construction Regulations 2003, and accept that my tender will be prejudiced and may be rejected at the discretion of the Employer.

NAME OF TENDERER: .....……..…….....

SIGNATURE:.....DATE:……

ANNEXURE "G"

THE MSUNDUZI MUNICIPALITY

SUPPLIES AND SERVICES CONTRACT No. E29 OF 26/27

THE DESIGN, MANUFACTURE, SUPPLY, DELIVERY, OFF-LOADING, ERECTION AND DRY-COMMISSIONING OF HIGH AND MEDIUM VOLTAGE POWER TRANSFORMERS AND ASSOCIATED EQUIPMENT

TAX CLEARANCE CERTIFICATE

Tenderers are required to attach hereto a Tax Compliance Status Verification Pin.

ANNEXURE "H"

THE MSUNDUZI MUNICIPALITY

SUPPLIES AND SERVICES CONTRACT No. E29 OF 26/27

THE DESIGN, MANUFACTURE, SUPPLY, DELIVERY, OFF-LOADING, ERECTION AND DRY-COMMISSIONING OF HIGH AND MEDIUM VOLTAGE POWER TRANSFORMERS AND ASSOCIATED EQUIPMENT

CIPC REGISTRATION CERTIFICATE

Tenderers are required to attach hereto proof of registration with the Companies and Intellectual Property Commission (CIPC) for adjudication purposes.

ANNEXURE "I"

THE MSUNDUZI MUNICIPALITY

SUPPLIES AND SERVICES CONTRACT No. E29 OF 26/27

THE DESIGN, MANUFACTURE, SUPPLY, DELIVERY, OFF-LOADING, ERECTION AND DRY-COMMISSIONING OF HIGH AND MEDIUM VOLTAGE POWER TRANSFORMERS AND ASSOCIATED EQUIPMENT

CENTRAL SUPPLIER DATABASE (CSD) REGISTRATION REPORT

Tenderers are required to attach hereto proof of registration with the Central Supplier Database (CSD).

A full Report may be required for adjudication purposes.

ANNEXURE "J"

THE MSUNDUZI MUNICIPALITY

SUPPLIES AND SERVICES CONTRACT No. E29 OF 26/27

THE DESIGN, MANUFACTURE, SUPPLY, DELIVERY, OFF-LOADING, ERECTION AND DRY-COMMISSIONING OF HIGH AND MEDIUM VOLTAGE POWER TRANSFORMERS AND ASSOCIATED EQUIPMENT

COMPACT DISC (CD) OR USB-FLASH DRIVE

The Compact Disc (CD) or USB-Flash Drive should be submitted in a sealed envelope and attached hereto.

The CD or USB-Flash Drive may assist both the Municipality and the Service Provider in the case of any dispute with regards to the contents of the bid submitted. The scanned copy may serve as the secondary verification method.

SIGNED ON BEHALF OF THE SERVICE PROVIDER:

Name of Service Providers …….

Name of Signatory: ……

Capacity of Signatory: ……

Signature …… Date ……

All literature and attachments submitted must be securely attached to the tender. The Council shall not be held liable for any loss or damages sustained due to the Service Providers's failure to comply with this condition.