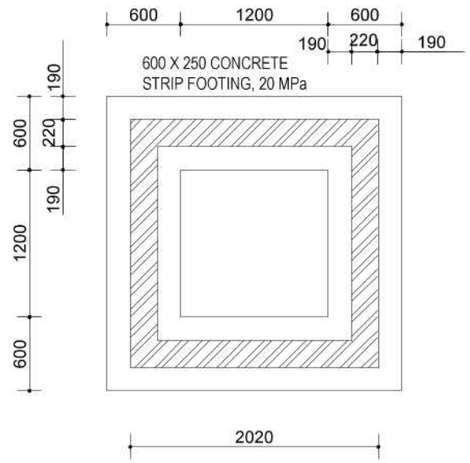

FOUNDATION LAYOUT

SCALE 1: 50

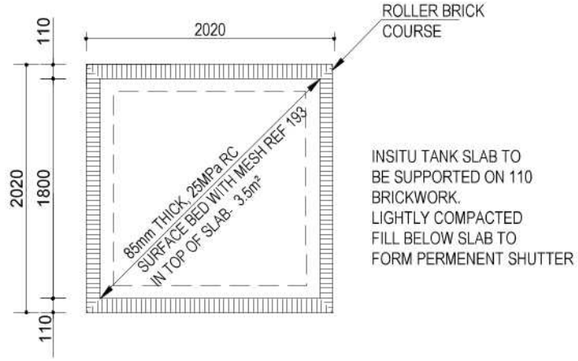

TANK SLAB LAYOUT

SCALE 1: 50

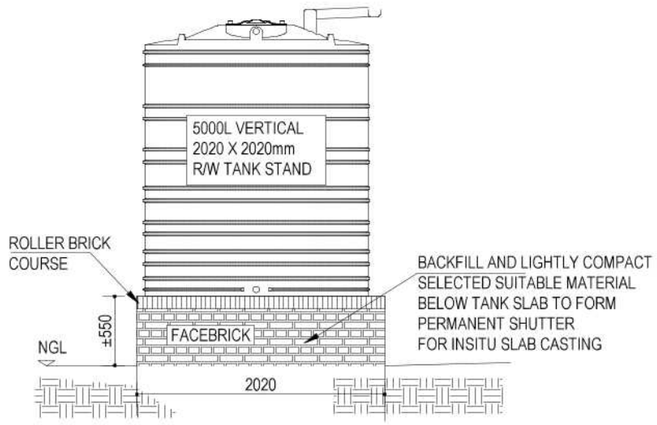

ELEVATION

SCALE 1: 50

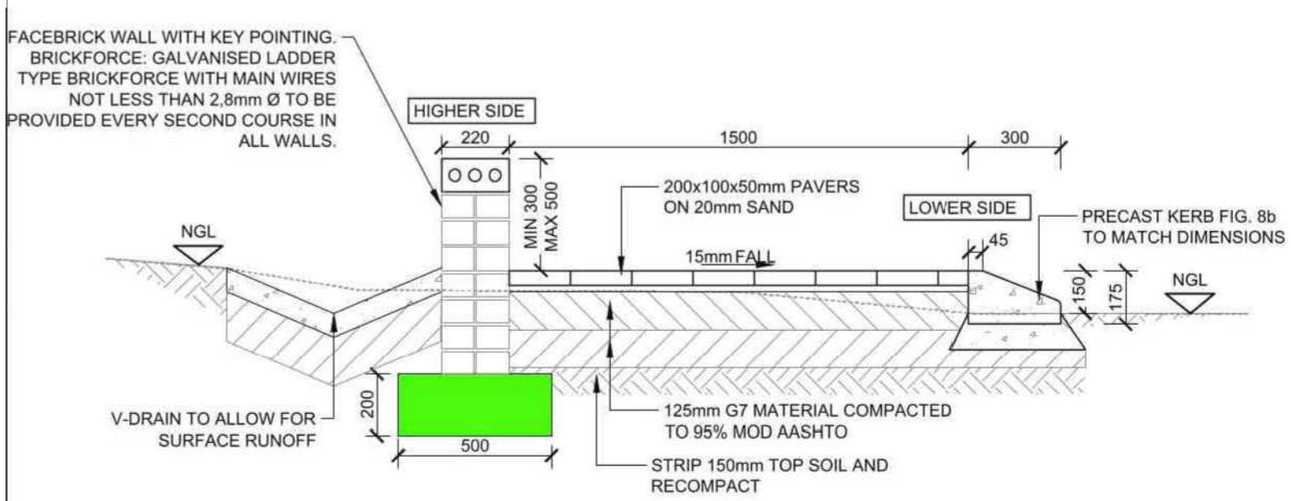

GARDEN WALL AND WALKWAY SECTION

SCALE 1:20

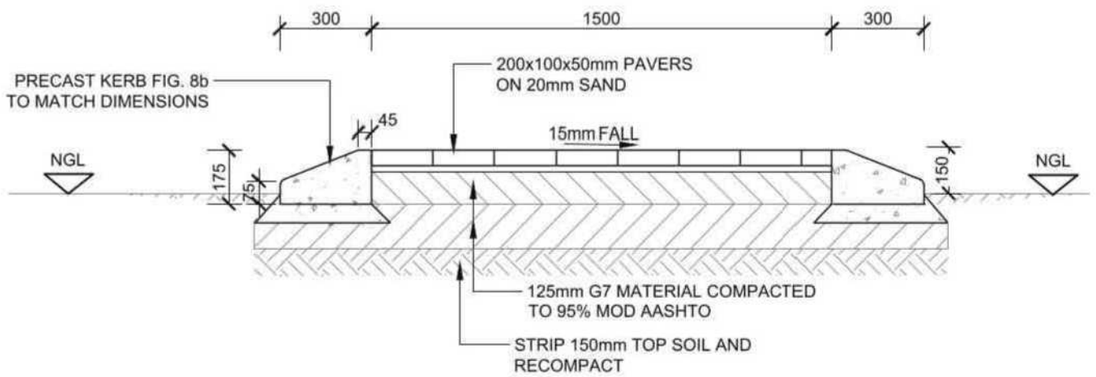

WALKWAY SECTION

SCALE 1:20

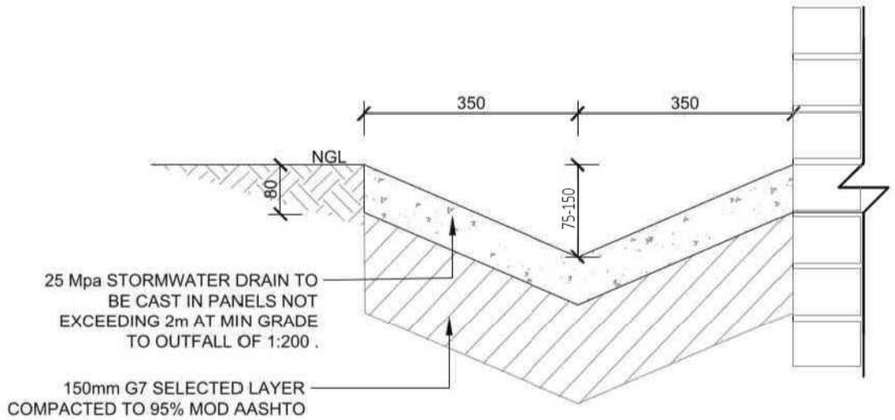

700mm WIDE STORMWATER V-DRAIN DETAIL

SCALE 1: 10

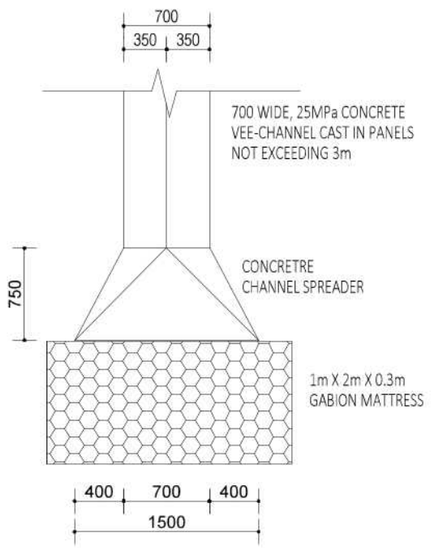

CHANNEL DETAILS

SCALE 1:50

rev	description	date

client

Province of the EASTERN CAPE EDUCATION

implementing agent

THE MVULA TRUST
A Leading Developmental NGO

project description

DOE FLUSH TOILETS
MAINTENANCE
PROGRAMME

drawing title

GENERAL TYPICAL
DETAILS & LAYOUTS

emis number :

drawing size : A3

drawing number

T-1202/16