ITEM NO.	

FOR UNTOLERANCED DIMENSIONS SEE ISO 2768-1: DESIGNATION
FOR GENERAL TOLERANCE ON WELDED CONSTRUCTIONS SEE ISO 13920: CLASS

M
A E

2D STATUS | IN WORK

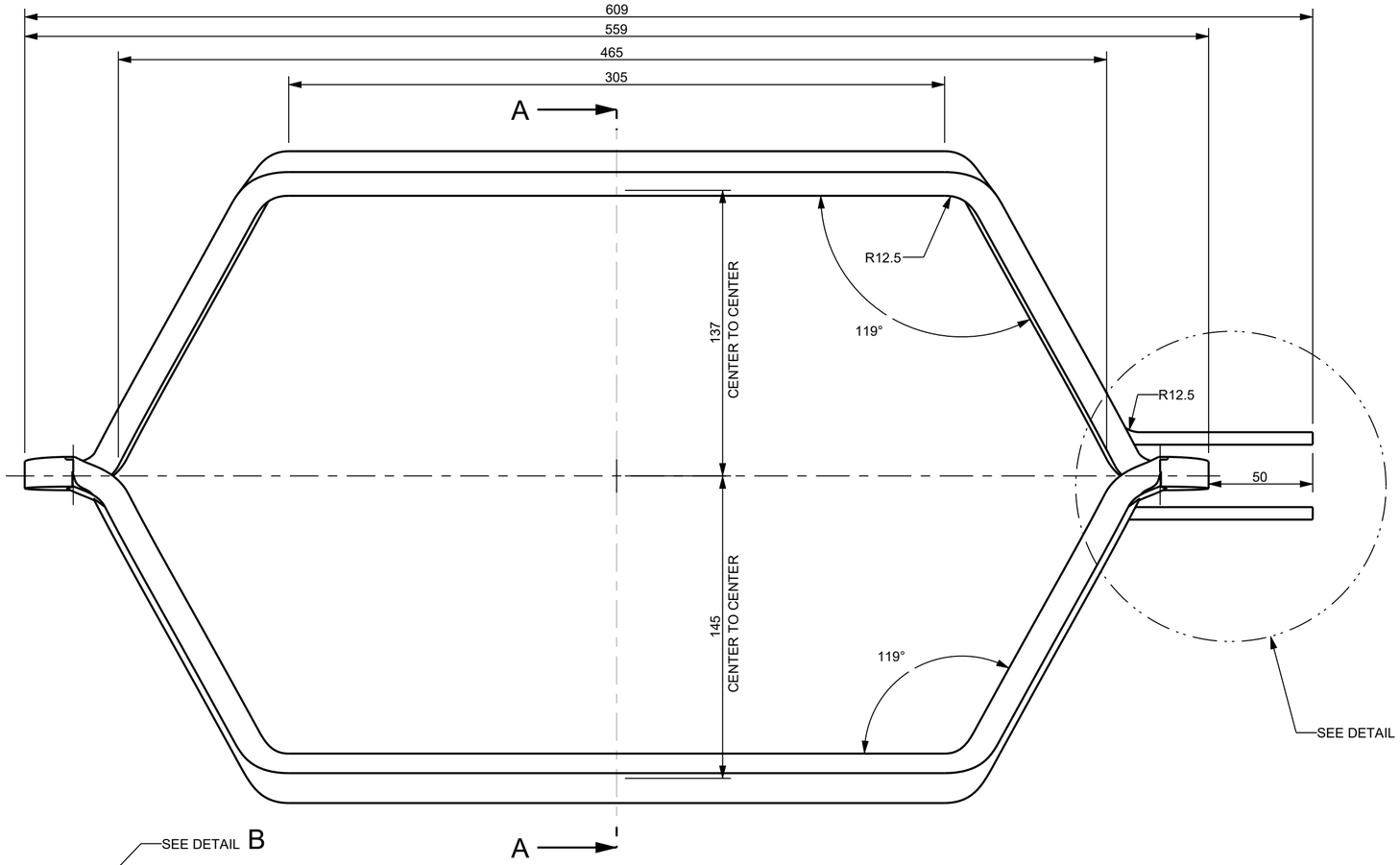

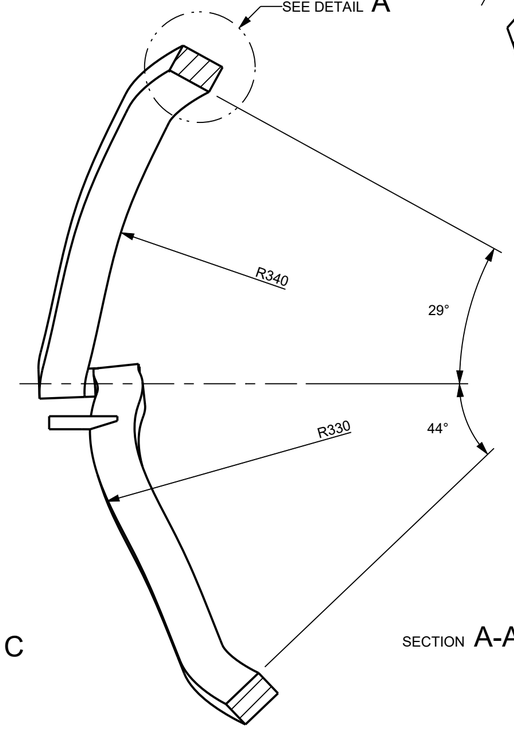

SECTION A-A

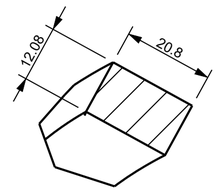

DETAIL A
SCALE 1:1

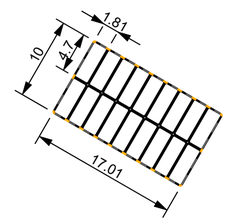

SCALE 2:1
18 X COPPER STRIP SIZES

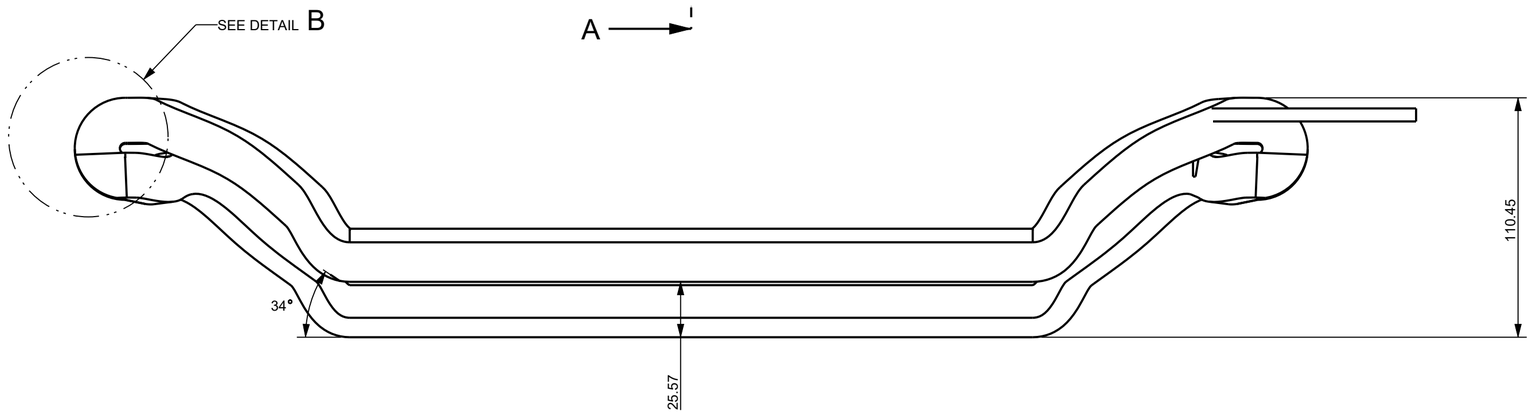

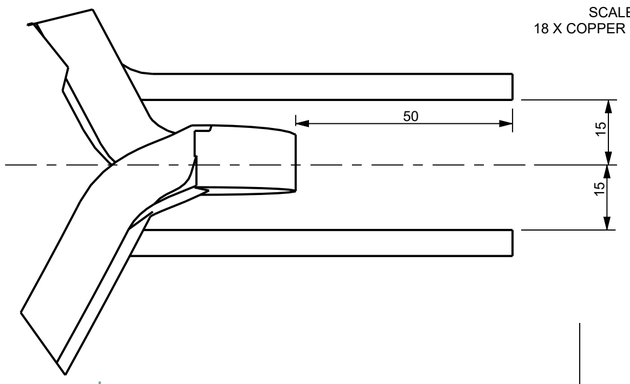

FOR PROTOTYPE ONLY

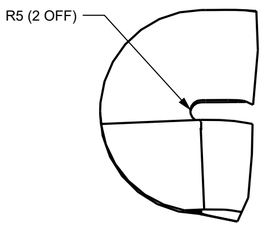

DETAIL B
SCALE 1:1

DETAIL C
SCALE 1:1

engineering
Transnet Ltd Reg. No. 1990/000900/06
15 April 2026
Durban
Configuration

AMENDMENTS	
MASS	3.27 Kg

COPYRIGHT
THIS DRAWING TOGETHER WITH THE COPYRIGHT IS THE PROPERTY OF
TRANSNET
THIS DRAWING OR ANY PART THEREOF IS NOT TO BE COPIED OR OTHERWISE REPRODUCED OR USED FOR MANUFACTURE OR ANY OTHER PURPOSE WITHOUT THE WRITTEN PERMISSION FROM
CHIEF EXECUTIVE,
TRANSNET ENGINEERING

ASSEMBLY DRG No. - -		DRAWN	N.T.N.
- -		CHECKED	N.C.L.
CLASS 15E		APPROVED	B.E.D.
TYPE ELECTRIC LOCOMOTIVE		DATE	23-10-2017
-		SCALE	1:2
A-2	PROJECTION	DOCUMENT REFERENCE No.	PD_PEL_KL_DRW_05A

KILNER PARK | ROTATING MACHINES

STATOR COIL, 15E TRACTION MOTOR

-

-

SHEET 1 OF 2

MATERIAL

SEE SHEET 2 OF 2

-

-

-

TRANSNET ENGINEERING

No. PEL05A0530

REV. -

ITEM NO.	

FOR UNTOLERANCED DIMENSIONS SEE ISO 2768-1: DESIGNATION M
FOR GENERAL TOLERANCE ON WELDED CONSTRUCTIONS SEE ISO 13920: CLASS A E

2D STATUS | IN WORK

DESCRIPTION	SPEC
STRIP COPPER BARE	1.8 X 4.7MM
COPPER STRIP WITH PRIMARY INSULATION: POLYIMIDE FILM	1.96 X 4.8MM
COIL WITH COMPLETE INSULATION (DETAIL A)	20.8 X 12.08MM
NUMBER OF TURNS PER COIL	9
NUMBER OF COILS PER SET	72

ITEM NUMBER	SPECIFICATION	SIZE	DESCRIPTION	APPLICATION	POSITION
1	PD_COMP_NAT_SPEC_804	4.7 MM X 1.8 MM	COPPER CONDUCTOR		
2		0.025 MM X 12.7 MM	KAPTON 100 HN. POLYMIDE ADHESIVE FILM.	1 LAYER 1/2 LAP	EVOLUTE
				1 LAYER 1/2 LAP	CORNERS
				1 LAYER 1/2 LAP 45MM AWAY FROM LEADS TAPE 50MM	LEADS (TAPE)
				1 LAYER 1/2 LAP	SEAL ENDS OF SLOT PORTION
3	PD_COMP_NAT_SPEC_613	0.15 MM X 25 MM	LOW BONDED GLASS BACKED MICAPAPER TAPE	2 LAYER 1/2 LAP	SLOT POSITION
				2 LAYER 1/2 LAP	COMPLETE COIL
4	PD_COMP_NAT_SPEC_605	0.15 MM X 25 MM	TREATED HERRINGBONE GLASS TAPE	2 LAYER 1/2 LAP 45MM AWAY FROM LEADS TAPE 50MM ON 1ST AND 3RD	LEADS
				2 LAYER 1/2 LAP	COMPLETE COIL
5	PD_COMP_NAT_SPEC_615	0.13 MM THICKNESS	NOMEX 414 PAPER	SEPARATE CONDUCTORS PER COIL	SLOT POSITION
				SEPARATE CONDUCTORS PER COIL	LEADS

AMENDMENTS

MASS 3.27 Kg

COPYRIGHT
THIS DRAWING TOGETHER WITH THE COPYRIGHT IS THE PROPERTY OF
TRANSNET
THIS DRAWING OR ANY PART THEREOF IS NOT TO BE COPIED OR OTHERWISE REPRODUCED OR USED FOR MANUFACTURE OR ANY OTHER PURPOSE WITHOUT THE WRITTEN PERMISSION FROM
CHIEF EXECUTIVE,
TRANSNET ENGINEERING

ASSEMBLY DRG No. - -		DRAWN	N.T.N.
-	- -	CHECKED	N.C.L.
CLASS 15E		APPROVED	B.E.D.
TYPE ELECTRIC LOCOMOTIVE		DATE	23-10-2017
-		SCALE	1:2
DOCUMENT REFERENCE No.			PD_PEL_KL_DRW_05A

KILNER PARK ROTATING MACHINES

STATOR COIL, 15E TRACTION MOTOR

-

-

SHEET 2 OF 2

MATERIAL

SEE SHEET 2 OF 2
-
-
-

A-2 PROJECTION

TRANSNET ENGINEERING

No. PEL05A0530 REV. -