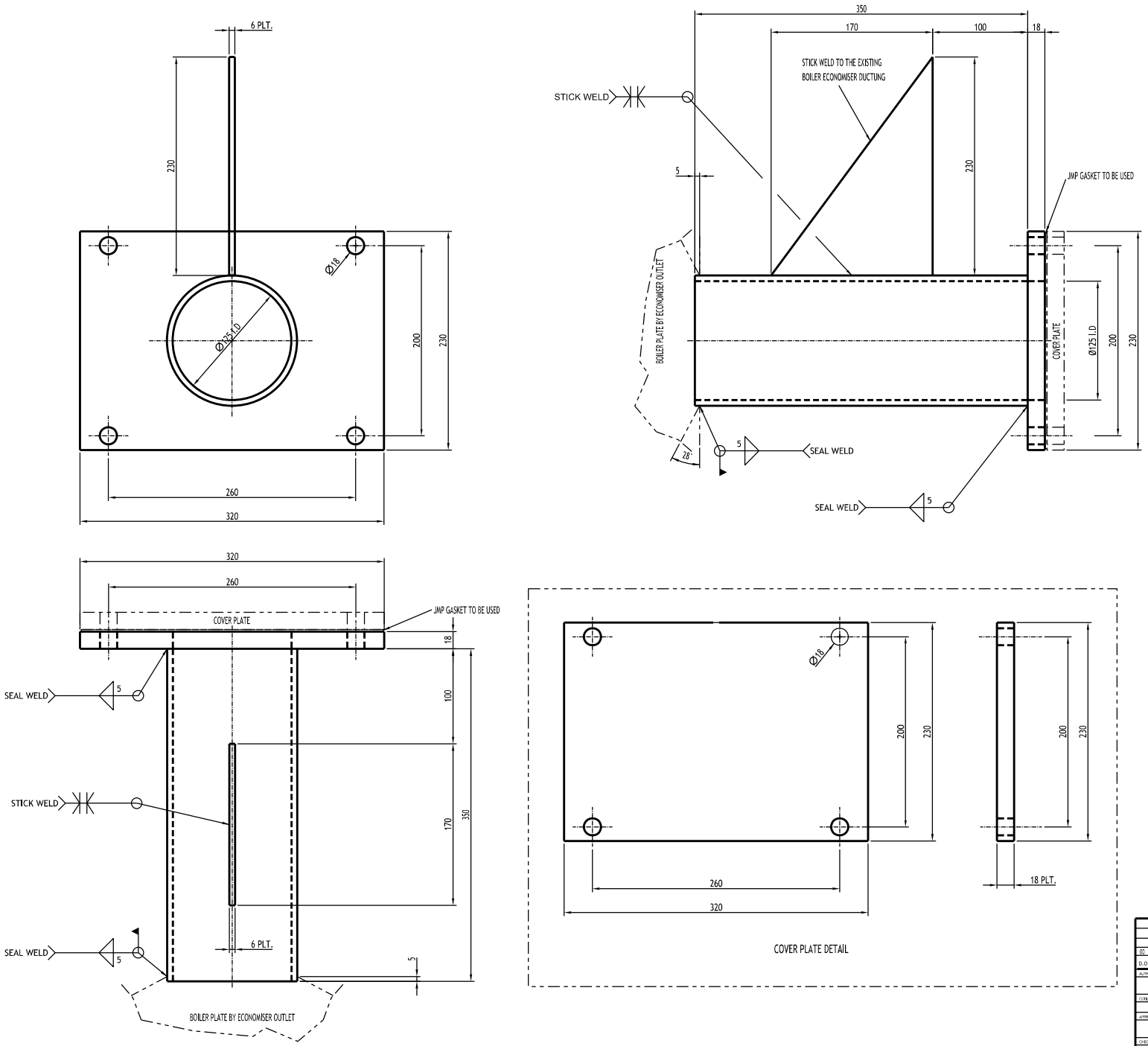


NOTES

1. PIPE SPOOL PIECE TO SCHEDULE 40 (6.6).
2. JMP GASKET TO BE USED
3. ALL WELDING TO COMPLY WITH ESKOM WELDING STANDARD.

CHECK PRINT
Signature: .....
Date: ..../../..

| D.O. | REV | DATE | REVISION | REV BY | CHKD BY | APP BY | AUTH BY | KKS APP | REFERENCE DRAWINGS |
|---|---|---|---|---|---|---|---|---|---|
| 00 | 0 | 04/08/2016 | ISSUED FOR REVIEW | BWN | TMW | | CC | | |

AUTHORISED FOR ESKOM BY:
CLASSIFICATION
PBS PATH
CODIFICATION BY:
APPROVED BY:
CHECKED BY: NOMATHEMBA MPULO
CREATED BY: BLESSMORE V.MPOFU 06/08/2016
SCALE 1 : 2

Eskom
ESKOM HOLDINGS SOC LTD
REG No 2002/015527/30

ARNOT POWER STATION
UNIT 1-6
CO & O2 ANALYSER
MOUNTING PORT

0.41/00000 | SHT | REV 0

DRAWING CLASSIFICATION: CONTROLLED DISCLOSURE

SIZE A1L