©SABS. Licensed exclusively to Stephen Shole; License ID : M5PQ-XWVG-GETE.
Copying and network storage prohibited.
You can make one paper copy of the standard; No paper copy may be photocopied or reproduced in any way.

ISBN 978-0-626-38858-4

SANS 660:2020

Edition 4

SOUTH AFRICAN NATIONAL STANDARD

School furniture

WARNING
This document references other documents normatively.

Published by the South African Bureau of Standards
1 Dr Lategan Road Groenkloof ✉ Private Bag X191 Pretoria 0001
Tel: +27 12 428 7911 Fax: +27 12 344 1568
www.sabs.co.za
© SABS

SABS

©SABS. Licensed exclusively to Stephen Shole; License ID : M5PQ-XWVG-GETE.
Copying and network storage prohibited.
You can make one paper copy of the standard; No paper copy may be photocopied or reproduced in any way.

This page has been left blank intentionally

©SABS. Licensed exclusively to Stephen Shole; License ID : M5PQ-XWVG-GETE.
Copying and network storage prohibited.
You can make one paper copy of the standard; No paper copy may be photocopied or reproduced in any way.



COPYRIGHT PROTECTED DOCUMENT

© SABS

In terms of the Standards Act 8 of 2008, the copyright in all South African National Standards or any other publications published by the SABS Standards Division, vests in the SABS. Any use of South African National Standards is limited to use specifically prescribed by the SABS. In the case of a South African National Standard based on an international standard, ownership of the copyright vests in the organization from which the SABS adopted the standard, whether it be under licence or membership agreement. The SABS is obliged to protect such copyright and is authorized to make the relevant international organization aware of any misuse thereof. Unless exemption has been granted, no extract or full text of any South African National Standard may be copied, reproduced, stored in a retrieval system or transmitted in any form or by any means without prior written permission from the SABS Standards Division. This does not preclude the free use, in the course of implementing the standard, of necessary details such as symbols, and size, type or grade designations. If these details are to be used for any purpose other than implementation, prior written permission must be obtained.

Details, advice and limitations of use can be obtained from the Manager: Standards Sales and Information Services. Tel: +27 (0) 12 428 6883 email: sales@sabs.co.za

SABS – Standards Division

The objective of the SABS Standards Division is to develop, promote and maintain South African National Standards. This objective is incorporated in the Standards Act, 2008 (Act No. 8 of 2008).

The SABS continuously strives to improve the quality of its products and services and would therefore be grateful if anyone finding an inaccuracy or ambiguity while using this standard would inform the secretary of the technical committee responsible, the identity of which can be found in the foreword.

Buying Standards

Contact the Sales Office for South African and international standards, which are available in both electronic and hard copy format. Tel: +27 (0) 12 428 6883 email: sales@sabs.co.za

South African National Standards are also available online from the SABS Webstore www.store.sabs.co.za

Information on Standards

SABS Customer Services provide comprehensive standards-related information on national, regional and international standards. Tel: +27 (0) 12 428 7911 / 0861 27 7227 email: info@sabs.co.za

©SABS. Licensed exclusively to Stephen Shole; License ID : M5PQ-XWVG-GETE.
Copying and network storage prohibited.
You can make one paper copy of the standard; No paper copy may be photocopied or reproduced in any way.

SANS 660:2020
Edition 4

Table of changes

Change No.	Date	Scope

Foreword

This South African standard was prepared by National Committee SABS/TC 136, *Furniture*, in accordance with procedures of the South African Bureau of Standards, in compliance with annex 3 of the WTO/TBT agreement.

This document was approved for publication in April 2020.

This document supersedes SANS 660:2015 (edition 3.7).

Reference is made in B.2 to the "relevant national department". In South Africa this means the Forestry Stewardship Council.

Annex B forms an integral part of this document. Annex A is for information only.

Compliance with this document cannot confer immunity from legal obligations.

©SABS. Licensed exclusively to Stephen Shole; License ID : M5PQ-XWVG-GETE.
Copying and network storage prohibited.
You can make one paper copy of the standard; No paper copy may be photocopied or reproduced in any way.

Contents

Page

Foreword

1 Scope 3

2 Normative references 3

3 Definitions 5

4 Requirements for type, dimensions, size, design and colour 6

5 Requirements for materials 7

6 Requirements for construction 11

7 Requirements for finish 15

8 Specific requirements for tables 16

9 Specific requirements for teachers' desks 18

10 Specific requirements for chairs and stools 19

11 Marking 19

12 Inspection and methods of test 20

Figures 1 – 15 ..... 26 – 38

Annex A (informative) Quality evaluation of classroom furniture produced to the requirements laid down in this standard 39

Annex B (normative) Classroom furniture 40

Bibliography 66

©SABS. Licensed exclusively to Stephen Shole; License ID : M5PQ-XWVG-GETE.
Copying and network storage prohibited.
You can make one paper copy of the standard; No paper copy may be photocopied or reproduced in any way.

This page is intentionally left blank

© SABS

©SABS. Licensed exclusively to Stephen Shole; License ID : M5PQ-XWVG-GETE.
Copying and network storage prohibited.
You can make one paper copy of the standard; No paper copy may be photocopied or reproduced in any way.

School furniture

1 Scope

This standard covers the requirements for the materials, construction, finish and performance of tables, teachers' desks, chairs and stools for use in classrooms.

NOTE 1 Guidance on the verification of the quality of classroom furniture produced to this standard is given in annex A.

NOTE 2 The requirements for the dimensions of classroom furniture produced to this standard are given in annex B.

2 Normative references

The following referenced documents, in whole or in part, are normatively referenced in this document and are indispensable for its application. For dated references, only the edition cited applies. For undated references, the latest edition of the referenced document (including any amendments) applies. Information on currently valid national and international standards can be obtained from the South African Bureau of Standards.

BS 3757, *Specification for rigid PVC sheet*.

ISO 17855-1, *Plastics – Polyethylene (PE) moulding and extrusion materials – Part 1: Designation system and basis for specifications*.

SANS 32/EN 10240, *Internal and/or external protective coatings for steel tubes – Specification for hot dip galvanized coatings applied in automatic plants*.

SANS 105-A02/ISO 105-A02, *Textiles – Tests for colour fastness – Part A02: Grey scale for assessing change in colour*.

SANS 121/ISO 1461, *Hot dip galvanized coatings on fabricated iron and steel articles – Specifications and test methods*.

SANS 135/ISO 1456, *Metallic and other inorganic coatings – Electrodeposited coatings of nickel, nickel plus chromium, copper plus nickel and of copper plus nickel plus chromium*.

SANS 279/ISO 1518, *Paints and varnishes – Scratch test*.

SANS 392, *Filler rods for braze welding (Metric units)*.

SANS 455, *Covered electrodes for the manual arc welding of carbon and carbon manganese* steels.

©SABS. Licensed exclusively to Stephen Shole; License ID : M5PQ-XWVG-GETE.
Copying and network storage prohibited.
You can make one paper copy of the standard; No paper copy may be photocopied or reproduced in any way.

SANS 540-1, *Fibreboard products – Part 1: Uncoated fibreboard*.

SANS 540-2, *Fibreboard products – Part 2: Coated fibreboard*.

SANS 657-4, *Steel tubes for non-pressure purposes – Part 4: Steel tubes of round, oval, square and rectangular section for furniture*.

SANS 929, *Plywood and composite board*.

SANS 1099, *Hardwood furniture timber*.

SANS 1274, *Coatings applied by the powder-coating process*.

SANS 1460, *Laminated timber (glulam).*

SANS 1783-1, *Sawn softwood timber – Part 1: General requirements*.

SANS 1783-3, *Sawn softwood timber – Part 3: Industrial timber*.

SANS 1931, *Particle board – Highly moisture-resistant exterior type*.

SANS 2808/ISO 2808, *Paints and varnishes – Determination of film thickness*.

SANS 2813/ISO 2813, *Paints and varnishes – Determination of specular gloss of non-metallic paint films at 20°, 60° and 85°*.

SANS 3668/ISO 3668, *Paints and varnishes – Visual comparison of the colour of paints.*

SANS 4586-2/ISO 4586-2 (SABS ISO 4586-2), *High-pressure decorative laminates – Sheets made from thermosetting resins – Part 2: Determination of properties*.

SANS 5986, *Moisture content of timber (electric moisture-meter method)*.

SANS 6892-1/ISO 6892-1, *Metallic materials –Tensile testing – Part 1: Method of test at room temperature.*

SANS 9227/ISO 9227, *Corrosion tests in artificial atmosphere – Salt spray*

SANS 10064, *The preparation of steel surfaces for coating*.

SANS 14341/ISO 14341, *Welding consumables – Wire electrodes and deposits for gas shielded metal arc welding of non alloy and fine grain steels – Classification.*

SANS 50312/EN 312, *Particleboards – Specifications*.

© SABS

©SABS. Licensed exclusively to Stephen Shole; License ID : M5PQ-XWVG-GETE.
Copying and network storage prohibited.
You can make one paper copy of the standard; No paper copy may be photocopied or reproduced in any way.

3 Definitions

For the purposes of this document, the following definitions apply:

3.1
acceptable
acceptable to the authority administering this standard, or to the parties concluding the purchase contract, as relevant

3.2
arrises
sharp edge formed by the meeting of two flat or curved surfaces

3.3
dual table
table normally used by two or more pupils

3.4
effective centre of seat (of a chair)
intersection of the diagonals of that part of the upper surface of a seat that is bounded by the sides and front of the seat and by the line parallel to the front at the effective depth of the seat

3.5
effective depth of seat (of a chair)
distance between the centre of the front edge of a seat and the point of intersection of the seat and the extended centre line of the front surface of the backrest

3.6
flashing
ridge left on a moulded plastics article at the line where the mould halves meet

3.7
height (of seat)
vertical distance between the horizontal plane on which the chair or stool stands and the effective centre of the seat (of a chair) or the top of the seat (of a stool)

3.8
lamin-veneered board
composite board that has veneers of either high-pressure or low-pressure decorative laminates of a selected type

3.9
lectern
removable, hinged writing surface that has a tubular steel frame that attaches to the frame of a chair

3.10
pedestal
rectangular cabinet containing drawers

3.11
self-edging
edge-strip or edge-banding of a material the same as or similar to that of the facing

3.12
shell
single-piece moulding comprising a seat and back rest and that can be secured to a chair frame

©SABS. Licensed exclusively to Stephen Shole; License ID : M5PQ-XWVG-GETE.
Copying and network storage prohibited.
You can make one paper copy of the standard; No paper copy may be photocopied or reproduced in any way.

3.13
single table
table normally used by one pupil

3.14
size (of chairs, stools and tables)
differentiation between dimensions within any one type of unit

3.15
solid timber
timber that is not built up in thickness but that may be built up in width, by means of bonding

3.16
stackable
term applied to identical units that, when stacked, partly envelop one another

3.17
stacking block
piece of resilient material fixed to the underside of a unit in order to prevent abrasion when units are stacked

3.18
standard conditions
temperature of 20 °C ± 2 °C and a relative humidity of 65 % ± 5 %

3.19
stopper
flanged fitting permanently inserted into the end of a tube to seal it off, and sufficiently strong to transmit the load from the tube to the bearing surface, without suffering deformation

3.20
timber plug
pellet
insert of material tightly fitted (using an adhesive) into a counterbored screw or bolt hole and so set that the grain, colour and pattern of the inserted material is continuous with that of the surrounding surface

3.21
welding
continuous or intermittent fusion welding or resistance spot welding

4 Requirements for type, dimensions, size, design and colour

4.1 Type

Classroom furniture shall be of one of the following types:

a) **Tables**:

1) single table for general use,

2) dual table for general use,

3) drawing table,

4) typing table,

© SABS

©SABS. Licensed exclusively to Stephen Shole; License ID : M5PQ-XWVG-GETE.
Copying and network storage prohibited.
You can make one paper copy of the standard; No paper copy may be photocopied or reproduced in any way.

5) needlework table,

6) arts and crafts table,

7) science table; or

b) **Desks**:

1) teacher's desk,

2) single combination desk for general use,

3) double combination desk for general use; or

c) **Chairs**: general purpose chairs; or

d) **Stools**: laboratory stools.

4.2 Dimensions

The dimensions of classroom furniture shall conform to the relevant dimensions given in figures 1 to 9 (inclusive) or the drawings in annex B (or both), except that where indicated, the dimensions given represent preferred sizes. In such cases other dimensions are acceptable.

4.3 Size

The size of a table, chair or laboratory stool shall be designated as A, B, C or D (as required – see the relevant figure) and shall conform to the height dimensions for tables, chairs and stools given in figures 3, 4, 8 and 9 or the drawings in annex B (or both), as relevant.

4.4 Design and colour

The design of tables, chairs, desks and stools shall be acceptable, and the colour of the painted finish and plastics components shall be as required.

5 Requirements for materials

5.1 Steel tubes

Steel tubes (of whatever section) shall be free from defects and shall comply with the requirements for grade 230 or grade 250 tubes of SANS 657-4, and their mechanical strength shall be such as to ensure compliance of the furniture in which they are used with the relevant performance requirements of the standard.

5.2 Mild steel sheet

Mild steel sheet shall be cold-rolled, shall, when tested in accordance with 12.17, have a tensile strength of at least 385 MPa, and shall be free from defects that may affect the appearance or serviceability (or both) of the finished article.

©SABS. Licensed exclusively to Stephen Shole; License ID : M5PQ-XWVG-GETE.
Copying and network storage prohibited.
You can make one paper copy of the standard; No paper copy may be photocopied or reproduced in any way.

5.3 Welding consumables

5.3.1 Mild steel electrodes

Covered electrodes for the welding of mild steel shall comply with the relevant requirements of SANS 455.

5.3.2 Braze welding filler rods

Braze welding filler rods shall comply with the requirements of SANS 392.

5.3.3 Solid filler wires

Solid filler wires for gas-shielded metal-arc welding shall comply with the requirements of SANS 14341.

5.4 Paints

5.4.1 Primer

A suitable anti-corrosive primer should be applied to cleaned metal surfaces.

5.4.2 Enamel

Baking enamel shall comply with an acceptable standard. Catalyst hardening enamel shall comply with an acceptable standard and shall, when measured for reflection of light in accordance with 12.16, have a specular gloss at 60° of at least 80.

5.4.3 Powders for powder coatings

Powders for powder coatings shall comply with the requirements for type 2 coatings of SANS 1274, shall be suitable for application by a fluidized-bed process or an aerostatic spray process, shall, when measured for reflection of light in accordance with 12.16, have a specular gloss at 60° of at least 80, and shall be of one of the following types:

a) epoxy;

b) polyester;

c) epoxy/polyester;

d) polyurethane; or

e) nylon.

5.5 Fittings, fasteners, clips, rivets, locks and washers

All fittings, fasteners, clips, rivets, locks and washers shall be of acceptable quality and size and shall, unless of an intrinsically corrosion-resistant metal or other acceptable material, be of mild steel having an electrodeposited finish that complies with the relevant of the following:

a) Nickel and chromium coatings shall comply with the requirements for service condition 2 of SANS 135.

© SABS

©SABS. Licensed exclusively to Stephen Shole; License ID : M5PQ-XWVG-GETE.
Copying and network storage prohibited.
You can make one paper copy of the standard; No paper copy may be photocopied or reproduced in any way.

b) Zinc and galvanizing and yellow passivating coatings on clips, rivets and washers shall be of an acceptable quality.

c) Galvanizing and yellow passivating coatings on bolts, nuts and screws shall be of an acceptable quality.

d) Zinc coatings on bolts, nuts and screws shall comply with the requirements of SANS 32 or SANS 121.

5.6 Timber and timber derivatives

5.6.1 General

Solid timber and the significant surfaces of laminated timber, plywood and, when relevant, particle board shall be of the required species and shall be as follows:

a) **Solid timber**. Solid timber used for tops and seats shall comply with the relevant requirements for clear grade or semi-clear grade timber of SANS 1099 or SANS 1783-1 or SANS 1783-3, as relevant, and the moisture content in adjacent components or pieces, when measured in accordance with 12.18, shall not vary by more than 20 g/kg pallets or (timber plugs) are allowed.

b) **Laminated timber**. Laminated timber shall comply with the relevant requirements of SANS 1460.

c) **Plywood, blockboard, laminboard and battenboard**. Plywood, blockboard, laminboard and battenboard shall comply with the relevant requirements of SANS 929 and plywoods (having face veneers of an acceptable species) shall be of nominal thickness 0,5 mm.

d) **Particle board**. Particle board shall, in the case of exterior type boards, comply with the relevant requirements of SANS 1931 and, in the case of interior type boards, with the relevant requirements of SANS 50312.

e) **Fibreboard**. Fibreboard shall comply with the relevant requirements for medium density boards of SANS 540-1 or SANS 540-2.

5.7 Decorative thermoset surfaces

5.7.1 Laminates

Laminates shall have a thickness of at least 0,8 mm and the requirements for general purpose laminates of SANS 4586-2 shall apply. The colour, pattern and finish shall be as required.

5.7.2 Decorative boards

Decorative melamine face boards shall comply with the relevant requirements of SANS 929 except in respect of the mass per unit area of unimpregnated paper to be used on boards, which shall be between 80 g/kg and 120 g/kg. The colour, pattern and finish shall be as required.

5.8 PVC surface veneers

PVC surface veneers shall have a nominal thickness of 0,20 mm ± 0,03 mm, and the requirements for type C_1 or C_3, as relevant, of BS 3757 for tensile properties, impact strength, dimensional stability, bending modulus and softening point shall apply. The colour, pattern and finish of PVC laminates shall be as required.

©SABS. Licensed exclusively to Stephen Shole; License ID : M5PQ-XWVG-GETE.
Copying and network storage prohibited.
You can make one paper copy of the standard; No paper copy may be photocopied or reproduced in any way.

5.9 Adhesives

5.9.1 Adhesives for timber plywood and melamine and PVC face veneers

Adhesives used for joining wooden components shall comply with the requirements for exposure of an acceptable quality. Adhesives used for bonding melamine and PVC face veneers shall comply with the requirements for exposure with acceptable grade.

5.9.2 Adhesives for edging

Adhesives used for bonding melamine or PVC edging shall be acceptable hot-melt or neoprene type adhesives.

5.9.3 Adhesives for use on ferrules

Adhesives used on ferrules shall be non-staining contact adhesives of an acceptable quality.

5.10 Edging

Unless otherwise required, the edging used on melamine or PVC tops shall be acceptable self-edging.

5.11 Coatings for timber

5.11.1 Protective coatings on timber and timber products shall be of an acceptable type and shall be one (or a combination) of the following:

a) sanding sealer; or

b) nitrocellulose lacquer; or

c) synthetic resin lacquer.

5.11.2 When coatings are measured for reflection of light in accordance with 12.16, the specular gloss at 60° shall be between 25 and 40.

5.12 Thermoplastics materials

Polypropylene and any similar thermoplastics material used in the manufacture of table, chair and stool components shall be odourless, and shall be based on an ultraviolet stabilized thermoplastics polymeric material of an acceptable designation (in accordance with ISO 17855-1) and further modified by the addition of the necessary pigment(s). In addition, the material shall be such that components made from it comply with the following requirements:

a) **Chemical resistance**. Contact of the components with oils, mild acids, alkalis, organic solvents and boiling water shall not cause any discoloration or other defect in the material.

b) **Colour stability**. The colour stability shall be such that, when a specimen is tested in accordance with 12.23 and compared with an unexposed specimen, the light fastness rating is at least 4.

c) **Impact strength**. The impact strength, determined in standard conditions in accordance with 12.19, of a specimen moulded in accordance with 12.19 from a polymer representative of the material from which the components are to be prepared, shall be at least 100 J per metre of width.

© SABS

©SABS. Licensed exclusively to Stephen Shole; License ID : M5PQ-XWVG-GETE.
Copying and network storage prohibited.
You can make one paper copy of the standard; No paper copy may be photocopied or reproduced in any way.

d) **Toughness**. A component shall not become crazed, chipped or scratched during normal use.

e) **Tensile strength and elongation at break**. When a dumb-bell shaped specimen is tested in accordance with 12.22, the yield strength shall not exceed 26 MPa and the elongation at break shall be at least 15 %.

5.13 Locks

Locks shall be of the double-safe chromium-plated cylinder type and shall each be supplied with two keys.

5.14 Handles

Drawers shall have acceptable pull handles.

6 Requirements for construction

6.1 General

Chairs, stools, tables and desks shall be of true and rigid construction. When tested in accordance with the relevant tests given in 12.3 to 12.11 (inclusive), no part of any unit shall develop any fracture or apparent loosening of a joint that is intended to be rigid, or any deformation that will affect the functioning or appearance (or both) of the unit. Stackable units shall remain functional after the relevant tests have been completed.

6.2 Stackability

The frames of tables and chairs shall be so constructed that units of the same type and size can nest closely and neatly over one another. The design shall obviate damage by abrasion between the units as a result of stacking, or acceptable stacking blocks shall be strategically fitted.

6.3 Bends in tubes

Tubes shall be so bent that true and even curves are formed within normal mill tolerances. The tubes shall be free from defects caused by bending, such as crushing, crimping, any flattening or reduction in diameter, or alteration in squareness or shape. The degree of bending shall not exceed 10 % of the relevant dimension or angle of the tube.

6.4 Ends of tubes

6.4.1 Leg ends

Leg ends shall be closed by means of tightly fitting stoppers of an acceptable material and design. When so required, ends shall further be enclosed in acceptable ferrules of a non-staining material and shall be properly glued to the leg ends.

6.4.2 Other ends

When so required, other ends that are exposed to view, shall be neatly closed off, by means of acceptable cropping or plugging.

©SABS. Licensed exclusively to Stephen Shole; License ID : M5PQ-XWVG-GETE.
Copying and network storage prohibited.
You can make one paper copy of the standard; No paper copy may be photocopied or reproduced in any way.

6.5 Holes in tubes

6.5.1 Drain holes

When required, drain holes of acceptable dimensions shall be made in appropriate positions in the tubular frames, for the drainage of fluids used during the finishing process of manufacture.

6.5.2 Holes for screws, bolts and rivets

Holes for screws, bolts and rivets shall be so drilled, punched or pressed that they are free from burrs and are not liable to cause excessive indentation or deformation of the tube. Holes shall be so countersunk or dimpled that the protrusion of the screw head is not beyond the level of the surrounding metal when the screws have been tightened. A tolerance of +1 mm on hole centres shall be allowed.

6.6 Welding

6.6.1 Manual welding

All welding shall be carried out by means of an acceptable welding process, using suitable filler metal to produce a close-fitting and correctly aligned joint. The welding procedure used shall be such as to ensure that the weld metal, the heat-affected zone and the surrounding parent metal are free from cracks, unacceptable cavities, porosity, trapped slag, overlap or undue undercut. There shall be full penetration of the joint and the weld shall produce a joint having mechanical properties at least the same as those of the parent metal. The welded faces shall be smooth and cleaned of all flux and spatter before any paint pre-treatment is applied.

6.6.2 Spot welding

Spot welds shall be resistance spot welds and joints shall be close-fitting and in correct alignment. There shall be proper fusion of the welded parts, and any indentation at the welds shall be minimal. Spot welds shall be so spaced as to provide a strong acceptable joint.

6.7 Pre-treatment of painted and electrodeposited surfaces

Painted and electrodeposited surfaces shall be smoothly finished and shall be acceptably prepared (in accordance with SANS 10064) before the application of any coating.

6.8 Painted coatings on metal

6.8.1 Enamel finishes

Enamel finishes shall consist of one or two coats of a primer (see 5.4.1) and one or more coats of an enamel (see 5.4.2). The dry film thickness of the finish, when measured in accordance with 12.12, shall be at least 60 µm.

6.8.2 Powder-coated finishes

A powder-coated finish shall be a coating of one of the types of powder given in 5.4.3.

6.9 Table tops

6.9.1 General

Table tops shall have dimensions that conform to those given in the relevant drawings, shall be flat and, when so required, shall be of one of the materials given in 6.9.2 to 6.9.4 (inclusive).

© SABS

©SABS. Licensed exclusively to Stephen Shole; License ID : M5PQ-XWVG-GETE.
Copying and network storage prohibited.
You can make one paper copy of the standard; No paper copy may be photocopied or reproduced in any way.

6.9.2 Solid and laminated timber tops

Solid and laminated timber for timber tops shall comply with the relevant requirements for timber given in 5.6. Tops shall be secured to the frame by means of at least six screws, or other acceptable means. Joints in both solid and laminated timber tops shall be either acceptable butt joints or F-profiled joints, and shall be so assembled that warping or distortion is obviated.

6.9.3 Composite timber tops

6.9.3.1 A composite timber top shall be of veneered battenboard, veneered blockboard, veneered or plain fibreboard, PVC-veneered or lamin-veneered board (in which case the substrate shall comply with the requirements of 5.6.1(d) for interior type boards)), plain particle board (in which case the substrate shall comply with the requirements of 5.6.1(d) for exterior type boards)), or plywood that complies with the requirements of 5.6.1(c).

6.9.3.2 The upper surfaces of the edgings shall be flush with the upper surface of the top, and the arris shall be acceptably chamfered. Edgings shall be of uniform thickness, close-fitting and without gaps between adjacent veneers or substrates.

6.9.4 Thermoplastics tops

6.9.4.1 Polypropylene or any other equivalent thermoplastics materials for table tops shall comply with the requirements of 5.12, and the mass of a top shall not differ by more than 2 % from the average mass (based on the mass of at least 10 tops). Acceptable and well proven moulding techniques shall be applied in order to eliminate possible internal defects and stresses.

NOTE Sharp corners should be avoided.

6.9.4.2 When a top is tested in accordance with 12.20, no cracking other than superficial crazing shall occur. When sectioned and examined in accordance with 12.21, a top shall show no sign of unplasticized raw material or of voids having a dimension greater than 2 mm. The colour of a top shall be as required.

6.9.5 Bonding of face veneers

Laminate and PVC face veneers shall be well bonded to the substrate by means of an acceptable water-resistant synthetic adhesive complying with the requirements of 5.9.1, and no gaps or open and unsealed edges shall be evident.

6.10 Chair seats and backrests

6.10.1 General

6.10.1.1 Seats and backrests of chairs shall be of one of the following materials, as required:

a) solid timber; or

b) laminated timber; or

c) plywood; or

d) polypropylene or equivalent thermoplastics material.

6.10.1.2 Thermoplastics shells, seats and backrests shall be secured to the frames by means of at least four screws, bolts and nuts, or pop rivets. Screws and bolts used on timber seats and backrests shall be flush with the timber or shall be raised head screws acceptably tightened.

©SABS. Licensed exclusively to Stephen Shole; License ID : M5PQ-XWVG-GETE.
Copying and network storage prohibited.
You can make one paper copy of the standard; No paper copy may be photocopied or reproduced in any way.

6.10.2 Solid and laminated timber seats and backrests

Solid and laminated timber for seats and backrests shall comply with the relevant requirements for timber given in 5.6. Joints shall be either acceptable butt joints or F-profiled joints, and shall be so assembled that warping or distortion is obviated. The outer edges shall be profiled in accordance with figure 2.

6.10.3 Plywood seats and backrests

Plywood for seats and backrests shall comply with the requirements of 5.6.1(c).

6.10.4 Polypropylene or equivalent thermoplastics material for seats and backrests

6.10.4.1 Polypropylene or equivalent thermoplastics material for seats, backrests or shells shall comply with the requirements of 5.12.

6.10.4.2 The mass of each component shall not differ by more than 2 % from the average mass (based on the mass of at least 10 components). When a seat, backrest or shell is tested in accordance with 12.20, no cracking other than superficial crazing shall occur. When sectioned and examined in accordance with 12.21, a seat, backrest or shell shall show no sign of unplasticized raw material or of voids having a dimension greater than 2 mm.

6.11 Coating of timber

6.11.1 After final sanding, timber and timber derivatives shall receive a protective coating that complies with the relevant requirements of 5.11 and is in the form of at least one of the following finishes, as required:

a) one coat of cellulose sanding sealer, followed by two coats of clear cellulose lacquer; or

b) one coat of cellulose sanding sealer and one coat of epoxy resin.

6.11.2 Machine marks and sandpaper marks shall have been removed before the surfaces are coated.

6.12 Fasteners

6.12.1 Bolts and nuts

Unless the nuts are self-locking, a lock washer or spring washer shall be fitted between the nut and the surface on which it bears.

6.12.2 Woodscrews

Woodscrews used in positions where direct bodily contact occurs shall have raised heads, while other screws shall be countersunk.

6.12.3 Rivets

Where plywood and thermoplastics seats and backrests are used, they may be secured to the metal frames by means of pop rivets, or other acceptable means.

© SABS

©SABS. Licensed exclusively to Stephen Shole; License ID : M5PQ-XWVG-GETE.
Copying and network storage prohibited.
You can make one paper copy of the standard; No paper copy may be photocopied or reproduced in any way.

7 Requirements for finish

7.1 General

Units shall be solidly constructed and shall have a neat appearance, and all surfaces and fittings shall have a smooth, even and uniform finish. All arrises shall be so smoothed and rounded that the clothes of the user will not be damaged or soiled and that no discomfort or injury will be caused to a user during normal use or handling.

7.2 Timber components

All timber surfaces and edges shall be acceptably sealed and no overspray, dripping or orange peel effect shall be visible. Surfaces shall be free from splits, cavities, indentations, grooves and other interruptions. There shall be no evidence of spilt and uncleaned adhesives, or dirt beneath the protective coating.

7.3 Thermoplastics components

7.3.1 Moulded thermoplastics surfaces

Polypropylene and other equivalent moulded thermoplastics components such as shells, seats, backrests and tops shall be free from flashing, and all arrises shall be rounded. The colour of components shall be uniform and an acceptable match to the required colour. When surfaces are measured for reflection of light in accordance with 12.16, the specular gloss at 60° shall be less than 40.

7.3.2 Veneered thermoplastics surfaces

PVC-veneered and lamin-veneered surfaces shall show no sign of glue starvation, telegraphy or irregularities in the surface pattern of the base material, cracks, chips, crazing and delamination that may affect the appearance or serviceability (or both) of a table. The outer surfaces of edgings shall be chamfered and no evidence of any of the following shall be visible:

a) lifting at the edges;

b) blistering;

c) overlapping;

d) open joints;

e) exposure of adhesive or substrate (or both); or

f) telegraphy of the substrate.

7.4 Metal components

7.4.1 Electrodeposited coatings

The type of electrodeposited coating (i.e. nickel and chromium, or zinc and cadmium) on components shall be as required. The coating shall have a corrosion resistance at least the same as that of the surrounding area in which the component is used. An electrodeposited coating shall be of one of the following types:

©SABS. Licensed exclusively to Stephen Shole; License ID : M5PQ-XWVG-GETE.
Copying and network storage prohibited.
You can make one paper copy of the standard; No paper copy may be photocopied or reproduced in any way.

a) **Nickel and chromium coatings**. Nickel and chromium coatings shall be free from defects such as uncoated areas, blisters, roughness, pits, cloudy patches, discoloration and stains. The initial and subsequent electrodeposited layers shall completely cover the base metal or coated surfaces, as relevant. When tested in accordance with 12.25, the coatings shall continue to adhere to the base metal, shall show no sign of separation between the electrodeposited layers, and shall comply with the relevant requirements of 5.5(a).

b) **Zinc and cadmium coatings**. When tested in accordance with 12.24, the thickness and adhesion of zinc and cadmium coatings on fastenings and fittings shall comply with the relevant requirements of 5.5(b) to 5.5(d) (inclusive).

7.4.2 Paint coatings

7.4.2.1 Surfaces to be painted shall be free from burrs and sharp edges and the painted finish shall be smooth, uniformly applied and free from visible defects.

7.4.2.2 When the finish is tested in accordance with 12.13, the edges of the groove shall not be jagged and there shall be no exposure of the underlying metal.

7.4.2.3 When tested in accordance with 12.14, paint shall show no visible defects and the underlying metal shall be free from corrosion and scale.

7.4.2.4 The colour of the finish, determined in accordance with 12.15, shall be an acceptable match to the required colour (see 4.4).

7.4.2.5 When tested in accordance with 12.16, the specular reflection of painted surfaces shall comply with the relevant requirements of 5.4. Touching-up shall be allowed provided that after this operation, surfaces are acceptably smooth and the touching-up is not easily discernible.

8 Specific requirements for tables

8.1 General

8.1.1 Corners of table tops

Corners of table tops shall have a radius that conforms to that shown in figure 1.

8.1.2 Edges of table tops

Edges of table tops shall conform to the profile shown in figure 2.

8.1.3 Height and working angle of table tops

Tables shall either have different fixed heights (as shown in figure 3) or, when so required, shall be adjustable in height and shall have acceptable locking mechanisms. Tops shall also be either in a fixed horizontal position or adjustable to other angles, as required, and in the case of adjustable tops, shall have acceptable locking mechanisms.

8.2 Single tables for general use

8.2.1 Basic dimensions

The basic dimensions of single tables shall be as given in figure 3 or annex B (or both).

© SABS

©SABS. Licensed exclusively to Stephen Shole; License ID : M5PQ-XWVG-GETE.
Copying and network storage prohibited.
You can make one paper copy of the standard; No paper copy may be photocopied or reproduced in any way.

8.2.2 Performance

A single table shall be such that when it is tested

a) in accordance with 12.3, the horizontal displacement of the top from its original position does not exceed 5 mm,

b) in accordance with 12.4, no deformation, gap, fracture or apparent loosening of a joint intended to be rigid develops,

c) in accordance with 12.6, the recorded deflection does not exceed 0,5 mm per 0,1 m^2 of area of the top being tested, and

d) in accordance with 12.7, no loosening of the top at any securing point is evident.

8.3 Dual tables for general use, typing tables and science tables

8.3.1 Basic dimensions

The basic dimensions of dual tables, typing tables and science tables shall be as given in figure 4 or annex B (or both).

8.3.2 Performance of dual tables

In addition to complying with the requirements of 8.2.2, a dual table shall be such that, when it is tested in accordance with 12.5, the table successfully withstands the static load and overbalancing forces applied.

8.3.3 Performance of typing and science tables

The requirements given in 8.2.2 shall apply.

8.4 Drawing table

8.4.1 Basic dimensions

The basic dimensions of drawing tables shall be as given in figure 5 or figure 6, as relevant.

8.4.2 Additional requirements for design

Drawing tables shall be adjustable in height, the angle of each top shall be adjustable (when required) and an acceptable locking mechanism shall be provided for each adjustment system.

8.4.3 Performance of small drawing tables

The requirements given in 8.2.2 shall apply.

8.4.4 Performance of large drawing tables

In addition to complying with the requirements of 8.2.2, a large drawing table shall be such that, when it is tested in accordance with 12.5, the table successfully withstands the static load and overbalancing forces applied.

©SABS. Licensed exclusively to Stephen Shole; License ID : M5PQ-XWVG-GETE.
Copying and network storage prohibited.
You can make one paper copy of the standard; No paper copy may be photocopied or reproduced in any way.

8.5 Needlework, arts and crafts, and nursery school tables

8.5.1 Basic dimensions

The basic dimensions of needlework, arts and crafts, and nursery school tables shall be as given in figure 7.

8.5.2 Performance

The requirements given in 8.2.2 shall apply.

9 Specific requirements for teachers' desks

9.1 Basic dimensions

The basic dimensions of teachers' desks shall be as given in figure 8 or figure 9, as relevant.

9.2 Pedestals

Pedestals shall be of timber or timber derivatives or steel that comply with the requirements of 5.2 and 5.6, and shall be either an integral part of the desk or shall be a removable unit that, when fixed in position within the frame of the desk, appears to be integral with it.

9.3 Drawers

Drawer fronts shall be of acceptable solid hardwood or steel, and the sides and backs shall be of either acceptable hardwood or acceptable soft thermoplastic or steel. The fronts, sides and backs shall be grooved for plywood or hardboard bottoms depending on the material used. The sides shall extend past the back for a distance of at least 75 mm or shall have restricted pull out, and one of the following systems of guides shall be provided:

a) two hardwood guide beads to each drawer, so secured within the pedestal as to engage the grooves cut in each side of the drawer; or

b) two hardwood guide beads that are secured to the drawer bearers and that work against distance pieces (of minimum thickness 6 mm) secured to the bottom edge of the sides of the drawer; or

c) as in (b), but without distance pieces; or

d) two thermoplastic drawer slides with stoppers on each side; or

e) two self-closing steel mounted drawer runners with hard wearing nylon wheels.

9.4 Performance

A desk shall be such that, when a drawer is tested in accordance with 12.8, the desk is capable of withstanding the test without becoming damaged or deformed.

© SABS

©SABS. Licensed exclusively to Stephen Shole; License ID : M5PQ-XWVG-GETE.
Copying and network storage prohibited.
You can make one paper copy of the standard; No paper copy may be photocopied or reproduced in any way.

10 Specific requirements for chairs and stools

10.1 Chairs for general use

10.1.1 Basic dimensions

The basic dimensions of chairs for general use shall be as given in figure 10 or annex B (or both).

10.1.2 Additional requirements for design

10.1.2.1 Chairs shall be so designed that at least six chairs stack neatly and freely one upon the other.

10.1.2.2 When so required, chairs shall be fitted with acceptable lecterns.

10.1.3 Performance

A chair shall be such that

a) when tested in accordance with 12.9 to 12.11 (inclusive), no spreading of the legs, damage to the frame or loosening of fasteners occurs, and

b) when tested in accordance with 12.11, the shell shows no sign of permanent set, whitening or cracking.

10.2 Laboratory stools

10.2.1 Basic dimensions

The basic dimensions of laboratory stools shall be as given in figure 11 or annex B (or both).

10.2.2 Performance

A stool shall be such that when tested in accordance with 12.9 to 12.10 (inclusive) no spreading of the legs, damage to the frame or loosening of fasteners occurs.

10.2.3 Additional requirements for design

The upper ends of the legs (that fit into the seat) shall be acceptably riveted or secured by other acceptable means.

11 Marking

Each table, desk, chair and stool shall bear the following information, on the underside of table tops or under the seat of chairs and stools, in clear and legible marking and in a manner that will not impair the finish or strength (or both) of the article:

a) the manufacturer's name, trade name or trademark; and

b) the date of manufacture or the production batch identification number or letter.

©SABS. Licensed exclusively to Stephen Shole; License ID : M5PQ-XWVG-GETE.
Copying and network storage prohibited.
You can make one paper copy of the standard; No paper copy may be photocopied or reproduced in any way.

12 Inspection and methods of test

12.1 Inspection

Visually examine and measure each unit in the sample for compliance with all the appropriate requirements of the standard for which tests to assess compliance are not given in 12.3 to 12.25 (inclusive).

12.2 Sequence of tests

Carry out the applicable tests on each test specimen in the sequence in which they are given. Should a failure occur during the sequence of tests, deem the specimen concerned to be defective and no further tests need be performed on it.

12.3 Impact resistance test for desk and table tops

12.3.1 Apparatus

a) **A test rig** that consists essentially of a frame structure to which the desk or table under test can be firmly secured to obviate movement, and a means of applying a vertical downward force of 1 000 N ± 10 N.

b) **A masspiece** of mass 25 kg ± 1 kg that can be suspended by means of a cord.

c) **Cord** of suitable strength and length to hold the masspiece referred to in (b).

d) **Felt** of width and length each approximately 500 mm, and of thickness at least 10 mm.

e) **Chocks** of suitable size to restrain the horizontal movement of the desk legs.

12.3.2 Procedure

12.3.2.1 Place the desk or table in the test rig and restrain the horizontal movement of the legs by securing (in an acceptable manner) the chocks against the bottoms of the legs.

12.3.2.2 Without disturbing the balance of the desk or table, apply a vertical force of 1 000 N ± 10 N to the top, and secure the top firmly to obviate movement during the test.

12.3.2.3 Using the cord, suspend the masspiece 1 m ± 0,01 m vertically above one end of the desk or table top.

12.3.2.4 Place the piece of felt on the edge at the end of the desk or table top.

12.3.2.5 So raise the masspiece through an arc that the cord makes an angle of 45° to the vertical, then release the masspiece and allow it to strike the felt.

12.3.2.6 Subject each end of the desk or table top to 25 such impacts.

12.3.2.7 Check for horizontal displacement of the top from its original position.

12.3.2.8 Check for compliance with the requirement of 8.2.2(a).

© SABS

©SABS. Licensed exclusively to Stephen Shole; License ID : M5PQ-XWVG-GETE.
Copying and network storage prohibited.
You can make one paper copy of the standard; No paper copy may be photocopied or reproduced in any way.

12.4 Static load resistance test for single tables

12.4.1 Place the table in the normal position on a level surface and apply, for at least 1 min, a force of 500 N distributed over an area of 150 mm × 150 mm in the approximate centre of the table top.

12.4.2 Check for compliance with the requirement of 8.2.2(b).

12.5 Static load resistance test for dual and drawing tables

12.5.1 For a period of 1 min, apply two forces, each of 500 N and each distributed over an area of 150 mm × 150 mm, at two points in the approximate centre of each half of the table top.

12.5.2 Check for compliance with the requirements of 8.3.2 and 8.4.4.

12.6 Deflection resistance test for table tops

12.6.1 Apparatus

a) **A straight edge** of length at least equal to that of the table.

b) **A feeler gauge** or other acceptable means of measuring deflection.

12.6.2 Procedure

12.6.2.1 Subject the table top to a force of 100 N applied perpendicularly to the centre of the surface.

12.6.2.2 So place the straight edge across the table top that it rests on the edges of the table top.

12.6.2.3 Measure the maximum vertical deflection between the table top and the lower surface of the straight edge.

12.6.2.4 Record the deflection to the nearest 25 µm.

12.6.2.5 Check for compliance with the requirement of 8.2.2(c).

12.7 Securing test for desk and table tops

Stand the desk or table upon a plane surface. Attach a masspiece of mass 20 kg ± 0,1 kg to a leg. Using a suitable apparatus attached to the corner of the top nearest to the loaded leg, raise the end of the desk or table approximately 250 mm from the supporting plane, and lower to its original position. Repeat this operation 250 times, and check for compliance with the requirement of 8.2.2(d).

12.8 Drawer load test

12.8.1 With the desk in the normal working position, extend the drawer to the fully open position.

NOTE A drawer should be extended for at least 80 % of the travel of which it is capable, before the guides become disengaged.

12.8.2 Place a masspiece of mass 25 kg ± 1 kg on the middle of the top edge of the drawer front and, after a period of 1 min, remove the masspiece and examine the desk for compliance with the requirement of 9.4.

©SABS. Licensed exclusively to Stephen Shole; License ID : M5PQ-XWVG-GETE.
Copying and network storage prohibited.
You can make one paper copy of the standard; No paper copy may be photocopied or reproduced in any way.

12.9 Backward tipping test for chairs and stools

12.9.1 Apparatus

A test rig capable of accommodating a chair or stool (as relevant) and allowing it to fall backwards freely through 90° onto a flat solid surface covered with high density foam rubber of nominal thickness 15 mm.

12.9.2 Procedure

12.9.2.1 Attach the rear legs of a chair or stool, or in the case of a stool without a backrest, two adjacent legs to the test rig.

12.9.2.2 Allow the chair or stool to so fall backwards from a point where it is just out of equilibrium onto the foam rubber, that the chair's backrest or the edge of the stool's seat (as relevant) strikes the foam rubber cushion.

12.9.2.3 Repeat this operation 30 times.

12.9.2.4 Examine the chair or stool for compliance with the requirements of 10.1.3(a) or 10.2.2 (as relevant).

12.10 Impact resistance test for chair and stool seats

12.10.1 Apparatus

a) **A test rig** to which a masspiece of mass 7 kg ± 0,1 kg can be attached and allowed to fall freely, by means of a quick release mechanism, through a distance of 150 mm onto the seat of a chair or stool (as relevant).

b) **A timber disc** of diameter 300 mm that has securely attached to its lower surface a piece of high density foam plastics material of nominal thickness 25 mm.

12.10.2 Procedure

12.10.2.1 So secure the chair or stool (as relevant) under test in the test rig on a horizontal plane surface that it will not move during the test.

12.10.2.2 Protect the seat by centring the timber disc on it and securing the disc in an acceptable manner.

12.10.2.3 Allow the masspiece to fall onto the disc.

12.10.2.4 Repeat this procedure 50 times.

12.10.2.5 Examine the chair or stool for compliance with the requirements of 10.1.3(a) or 10.2.2 (as relevant).

12.11 Flexing resistance test for thermoplastics shells

12.11.1 Apparatus

A test rig with a padded ram, capable of applying to and removing from the uppermost point of the contour of a thermoplastics shell mounted upside-down on a horizontal plane surface a downward vertical force of 700 N, at a rate of (20 ± 1) cycles/min.

© SABS

©SABS. Licensed exclusively to Stephen Shole; License ID : M5PQ-XWVG-GETE.
Copying and network storage prohibited.
You can make one paper copy of the standard; No paper copy may be photocopied or reproduced in any way.

12.11.2 Procedure

12.11.2.1 So mount the shell in the test rig that the front edge of the seat and the top of the backrest are in contact with the plane surface.

12.11.2.2 Apply and remove the force.

12.11.2.3 Repeat this operation until the chair has been subjected to 10 000 such cycles.

12.11.2.4 Examine the shell for compliance with the requirements of 10.1.3(a) and 10.1.3(b).

12.12 Dry film thickness test for paint

Use SANS 2808.

12.13 Scratch resistance test for paint

Use SANS 279.

12.14 Corrosion resistance test for paint

Use SANS 9227 with an exposure period of 168 h.

12.15 Colour test for paint

Use SANS 3668.

12.16 Specular reflection test for paint, timber coatings and decorative laminates

Use SANS 2813.

12.17 Tensile strength test

Use the relevant method given in SANS 6892-1.

12.18 Test for moisture content of solid timber

Use SANS 5986.

12.19 Impact resistance test for thermoplastics

12.19.1 Test specimens

Each specimen shall be of the form and dimensions shown in figure 14, shall be moulded to shape under the same conditions, and shall be of the same polymer as that to be used for the manufacture of the table tops and chair shells. The direction of application of the moulding pressure shall be as shown in figure 14. The moulded specimen may be machined if necessary, except that the notched face and the notch shall have moulded surfaces.

12.19.2 Number of test specimens

Five specimens shall be used.

©SABS. Licensed exclusively to Stephen Shole; License ID : M5PQ-XWVG-GETE.
Copying and network storage prohibited.
You can make one paper copy of the standard; No paper copy may be photocopied or reproduced in any way.

12.19.3 Apparatus

A pendulum type impact testing machine having a pendulum so constructed that the centre of percussion coincides with the centre of the striking edge. The pendulum shall strike squarely across the full width of the specimen at a distance of 22 mm ± 0,5 mm from the face of the vice. The striking edge shall have a radius of 3,2 mm ± 0,1 mm and shall have a velocity at the moment of impact of 2 440 mm/s ± 30 mm/s. The gripping edges of the machine's vice shall have a radius of approximately 0,4 mm.

12.19.4 Procedure

12.19.4.1 Carry out the test at standard conditions.

12.19.4.2 Mount the specimen accurately in the vice of the testing machine, as shown in figure 15, with the notched side of the specimen facing the striker and the root of the notch level with the horizontal face of the vice.

12.19.4.3 Strike the specimen at a distance of 22 mm ± 0,5 mm above the face of the vice.

12.19.4.4 Record, as the impact strength of the material, the energy absorbed per 12,7 mm of width of specimen. (Use the arithmetic mean of the impact strength of all test specimens.)

12.20 Stress resistance test for thermoplastics

12.20.1 Apparatus

A water bath filled with an aqueous solution that contains 20 g/L of the active agent of an anionic detergent, and maintained at a temperature of 65 °C ± 3 °C.

12.20.2 Procedure

12.20.2.1 Immerse the plastics components to be tested, for a period of 24 h ± 5 min in the water bath.

12.20.2.2 Remove the components from the water bath and examine them for compliance with the requirements of 6.9.4 or 6.10.4 (as relevant).

12.21 Test for freedom of thermoplastics from unplasticized raw materials and voids

12.21.1 Apparatus

A band-saw (or similar device) equipped with a fine-toothed saw band.

12.21.2 Procedure

12.21.2.1 So saw lengthwise and widthwise through the component as to divide it into four approximately equal portions.

12.21.2.2 Saw centrally down one strut of the base, when relevant, or along any other vertical section of each of the four portions.

12.21.2.3 Examine each sawn edge of each portion for compliance with the requirements of 6.9.4 or 6.10.4 (as relevant).

© SABS

©SABS. Licensed exclusively to Stephen Shole; License ID : M5PQ-XWVG-GETE.
Copying and network storage prohibited.
You can make one paper copy of the standard; No paper copy may be photocopied or reproduced in any way.

12.22 Test for tensile strength and elongation at break of thermoplastics

12.22.1 Test specimens

Moulded test specimens from a compression-moulded sheet of an acceptable injection-moulded grade of polymer representative of the material from which the components are to be prepared, in the form and of the dimensions shown in figure 12. Use at least three specimens for the test.

12.22.2 Apparatus

A tensile testing machine that is capable of applying, to within ± 1 % of the true value, a tensile force along the axis of the test specimen, the widened ends of the specimen being held in grips of the type shown in figure 13. The grips are moved apart at a substantially constant rate that will allow the specimen to break within 30 s to 90 s. The machine is so equipped that the load at break is recorded.

12.22.3 Procedure

12.22.3.1 Carry out the test at standard conditions.

12.22.3.2 Determine, to the nearest 0,03 mm, the mean width and thickness of the waisted part of the specimen.

12.22.3.3 Mount the specimen with its widened ends in the grips in the tensile testing machine.

12.22.3.4 Gradually increase the load by separating the grips, until the specimen breaks.

12.22.3.5 Measure the elongation at break, and record the load at break, of the test specimen.

12.22.3.6 Repeat the test with the remaining specimens.

12.22.3.7 Calculate the tensile strength, in megapascals, of the specimen from the mean load at break and the original area of cross section, and calculate the elongation as a percentage of the original length.

12.23 Test for colour stability of thermoplastics shells and table tops

Use an acceptable colour stability test method and expose the specimen for 72 h. Then use the grey scale described in SANS 105-A02 for assessing the change in colour, and determine and record the light fastness rating of the specimen.

12.24 Adhesion test for zinc and cadmium

Use any acceptable method to determine the thickness and adhesion of coatings.

12.25 Adhesion test for nickel and chromium

Use the relevant method given in SANS 135.

©SABS. Licensed exclusively to Stephen Shole; License ID : M5PQ-XWVG-GETE.
Copying and network storage prohibited.
You can make one paper copy of the standard; No paper copy may be photocopied or reproduced in any way.

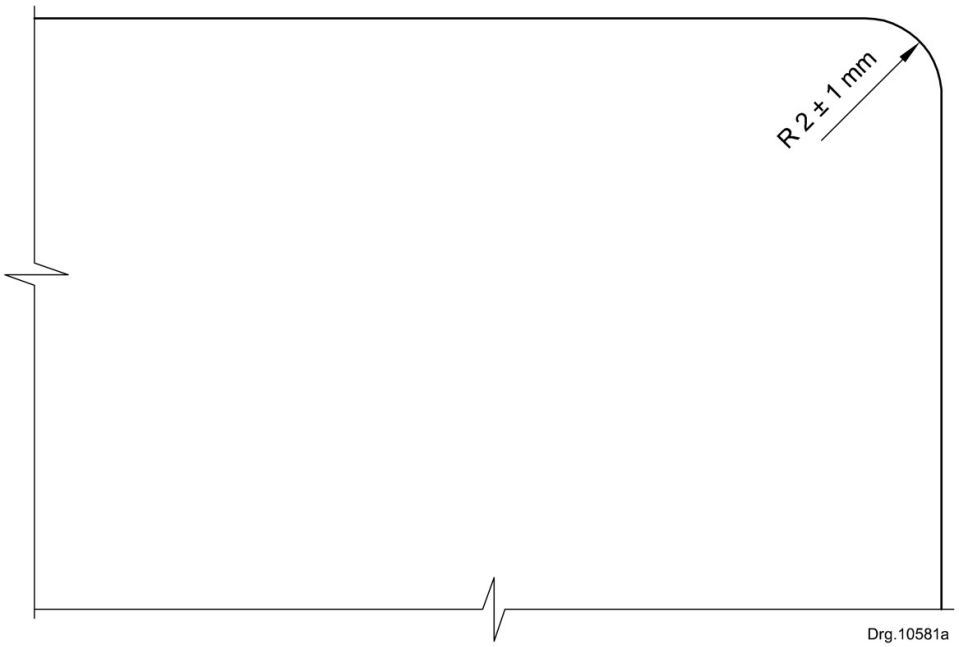

Figure 1 — Corner dimension of table tops, seats and backrests

© SABS

©SABS. Licensed exclusively to Stephen Shole; License ID : M5PQ-XWVG-GETE.
Copying and network storage prohibited.
You can make one paper copy of the standard; No paper copy may be photocopied or reproduced in any way.

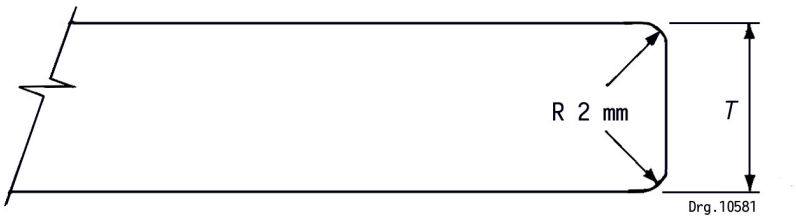

NOTE

a) *T* = in the range 18 mm to 25 mm.

b) Tolerance on stated value: ± 1 mm.

Figure 2 — Edge dimensions of table tops, seats and backrests

©SABS. Licensed exclusively to Stephen Shole; License ID : M5PQ-XWVG-GETE.
Copying and network storage prohibited.
You can make one paper copy of the standard; No paper copy may be photocopied or reproduced in any way.

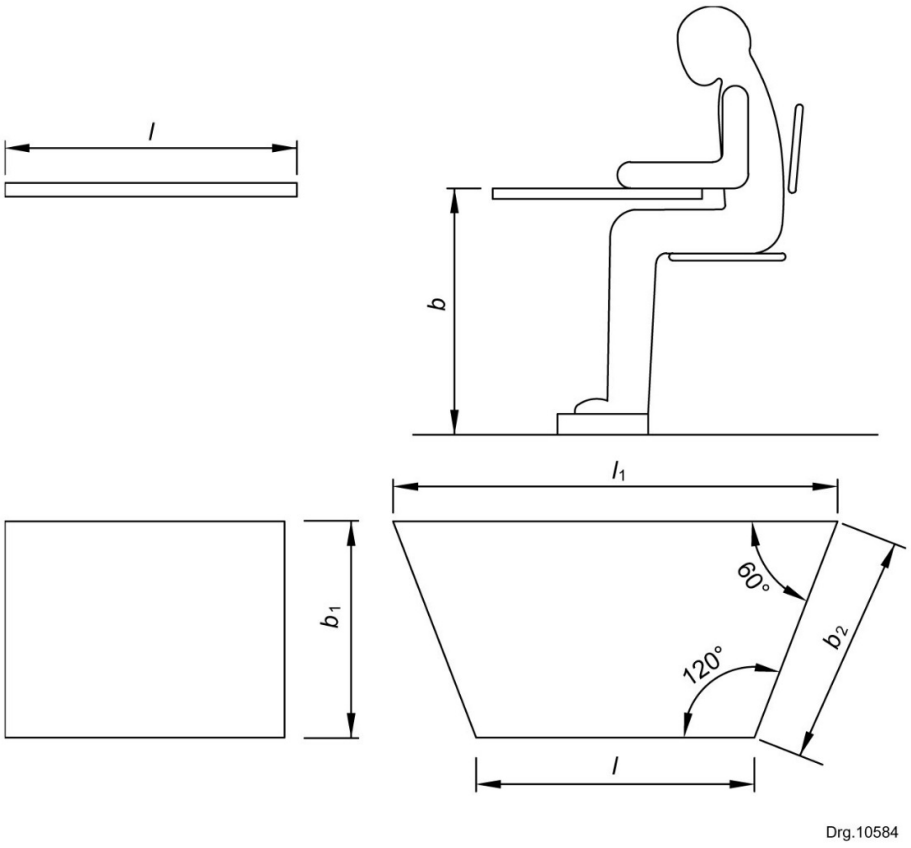

1	2	3	4	5	6
Size	**Dimensions** mm				
	h	*l* [a]	l_1	b_1[a]	b_2
A	500	600	1 200	529	600
B	550	600	1 200	500	600
C	650	600	1 200	500	600
D	725	600	1 200	500	600
	Tolerances				
	± 7	± 3	± 6	± 3	± 3
[a] Preferred dimension.					

Figure 3 — Dimensions of single tables for general use

© SABS

©SABS. Licensed exclusively to Stephen Shole; License ID : M5PQ-XWVG-GETE.
Copying and network storage prohibited.
You can make one paper copy of the standard; No paper copy may be photocopied or reproduced in any way.

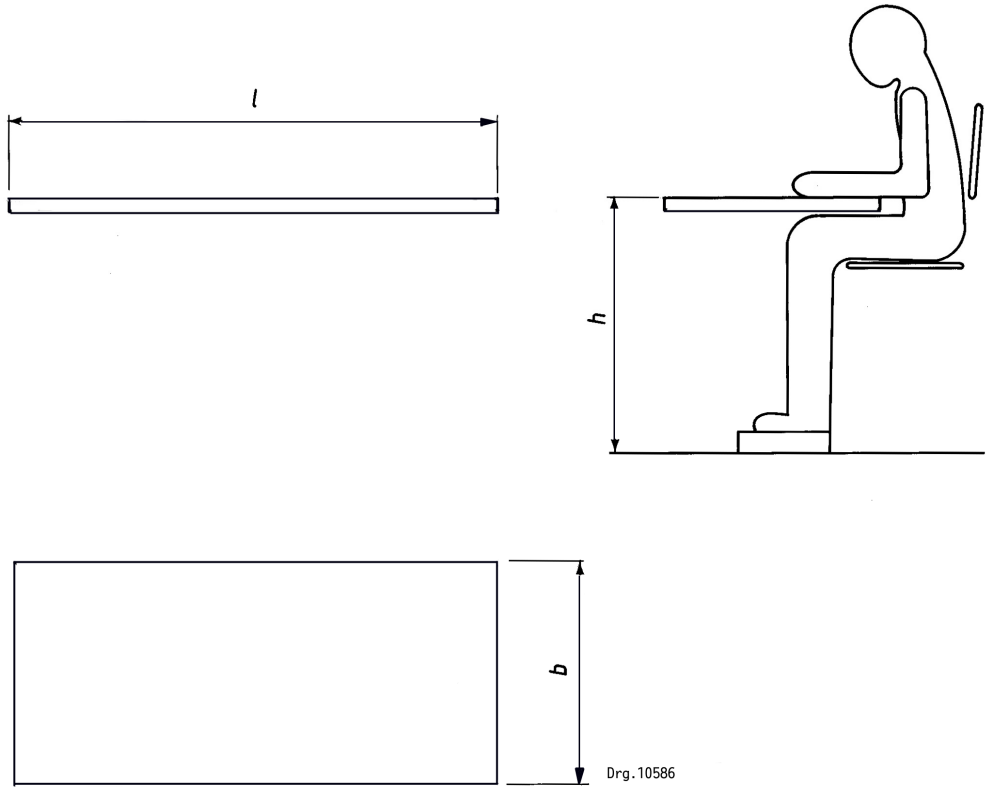

1	2	3	4
Size	**Dimensions** mm		
	h	*l* [a]	*b* [a]
A	500	1 200	450
B	550	1 200	500
C	650	1 200	500
D	725	1 200	500
Science table	770	1 200	500
	Tolerances		
	± 7	± 6	± 3
[a] Preferred dimension.			

Figure 4 — Dimensions of dual tables for general use, science tables and typing tables (size C)

©SABS. Licensed exclusively to Stephen Shole; License ID : M5PQ-XWVG-GETE.
Copying and network storage prohibited.
You can make one paper copy of the standard; No paper copy may be photocopied or reproduced in any way.

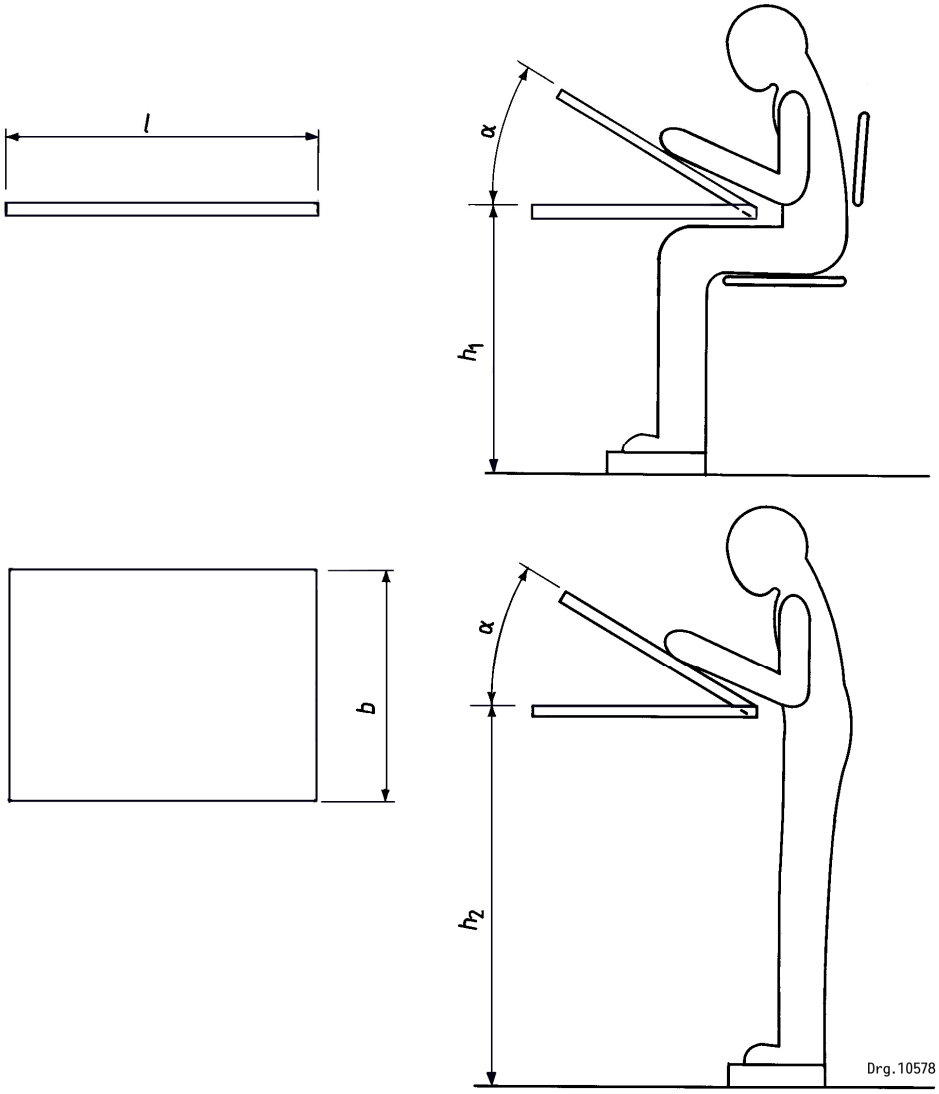

1	2	3	4	5
Dimensions mm				**Angle** °
h_1	h_2	l	b	α
725	1 200	600	450	0 – 30
Tolerances				
−7	+6	± 3	± 3	+2,5 (only on 30)

Figure 5 — Dimensions of A2 drawing tables

© SABS

©SABS. Licensed exclusively to Stephen Shole; License ID : M5PQ-XWVG-GETE.
Copying and network storage prohibited.
You can make one paper copy of the standard; No paper copy may be photocopied or reproduced in any way.

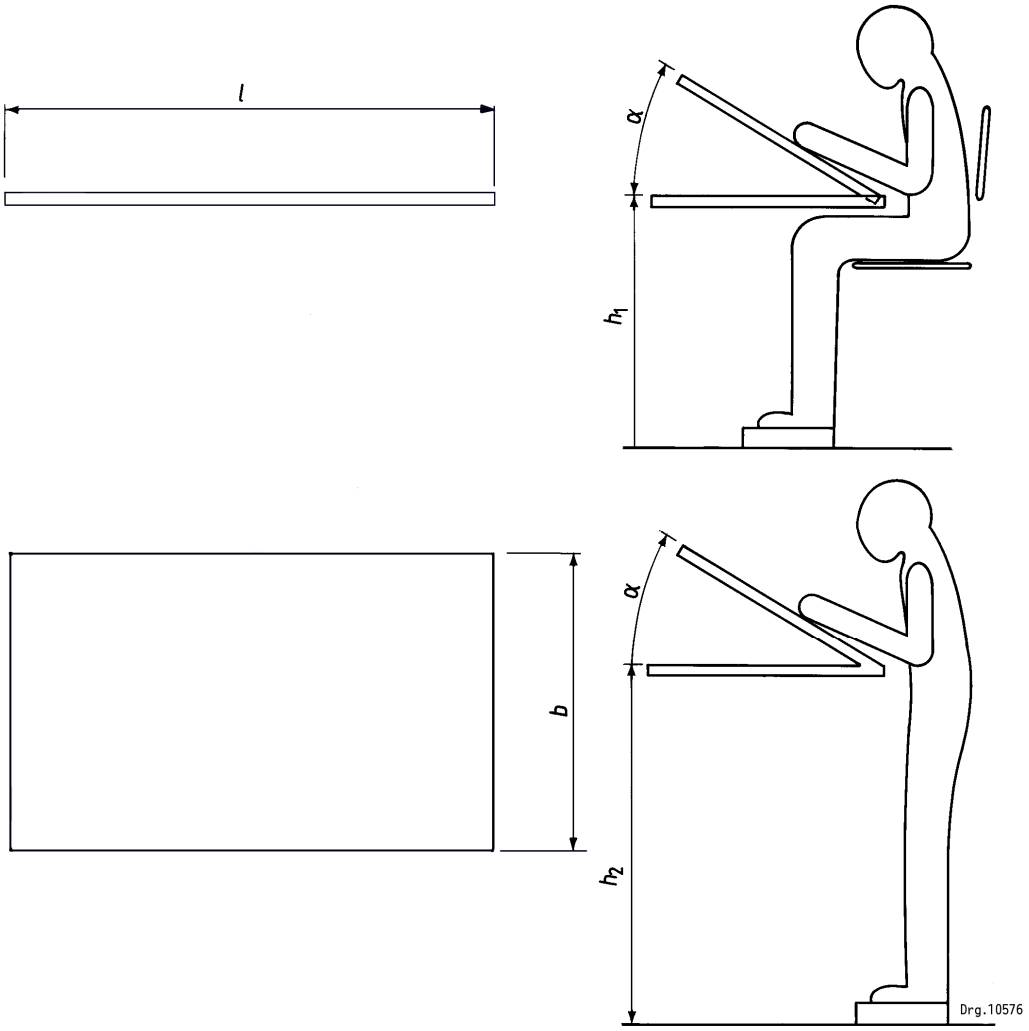

1	2	3	4	5
Dimensions mm				**Angle** °
h_1	h_2	l	b	α
725	1 200	1 200	650	0 – 30
Tolerances				
−7	+12	± 6	± 3	+2,5 (only on 30)

Figure 6 — Dimensions of A1 drawing tables

©SABS. Licensed exclusively to Stephen Shole; License ID : M5PQ-XWVG-GETE.
Copying and network storage prohibited.
You can make one paper copy of the standard; No paper copy may be photocopied or reproduced in any way.

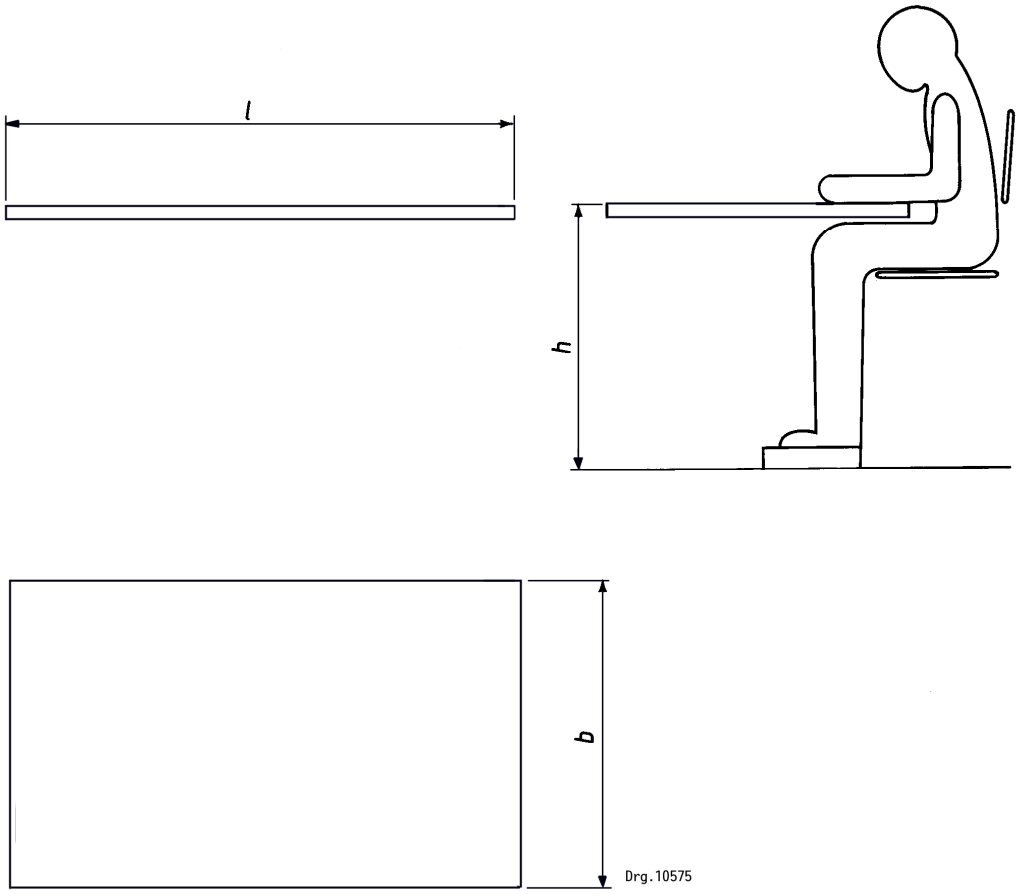

1	2	3	4
Type of table	**Dimensions** mm		
	h	*l*	*b*
Needlework Arts and crafts Nursery school	650 650 450	1 200 1 200 1 200	600 650 650
	Tolerances		
	± 6	± 6	± 3

Figure 7 — Dimensions of needlework, arts and crafts, and nursery school tables

© SABS

©SABS. Licensed exclusively to Stephen Shole; License ID : M5PQ-XWVG-GETE.
Copying and network storage prohibited.
You can make one paper copy of the standard; No paper copy may be photocopied or reproduced in any way.

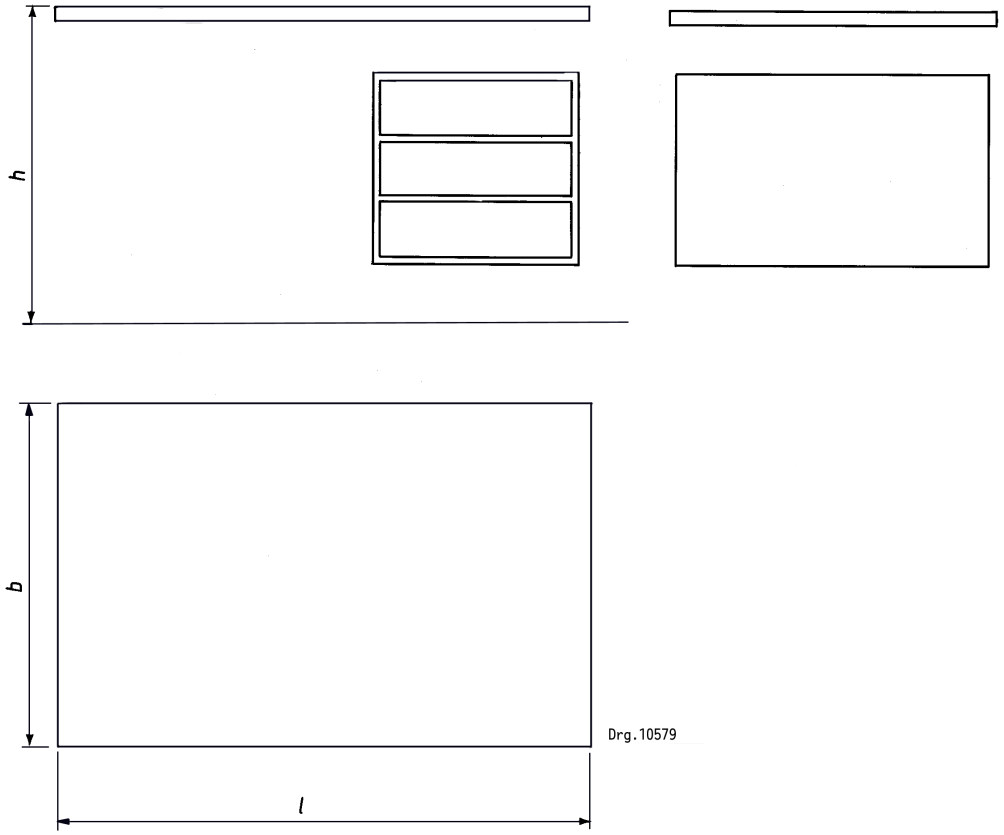

1	2	3
Dimensions mm		
h	*l*	*b*
725	1 220	760
Tolerances		
± 7	± 6	± 4

Figure 8 — Dimensions of teachers' desks

©SABS. Licensed exclusively to Stephen Shole; License ID : M5PQ-XWVG-GETE.
Copying and network storage prohibited.
You can make one paper copy of the standard; No paper copy may be photocopied or reproduced in any way.

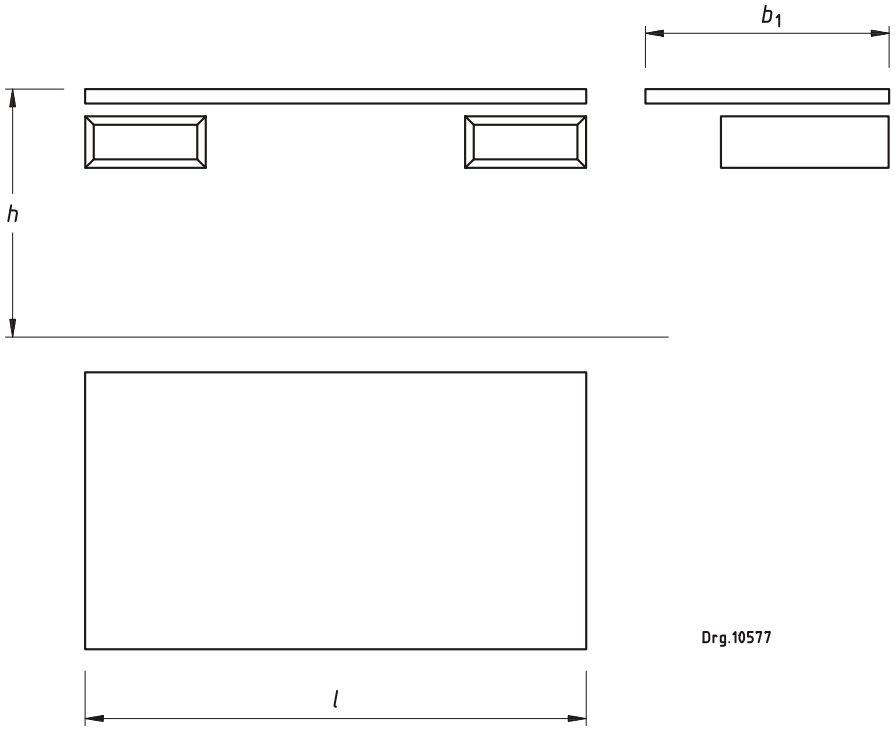

1	2	3
Dimensions mm		
h	*l*	b_1
725	1 500	900
Tolerances		
± 7	± 6	± 8

Figure 9 — Dimensions of alternative teachers' desks

© SABS

©SABS. Licensed exclusively to Stephen Shole; License ID : M5PQ-XWVG-GETE.
Copying and network storage prohibited.
You can make one paper copy of the standard; No paper copy may be photocopied or reproduced in any way.

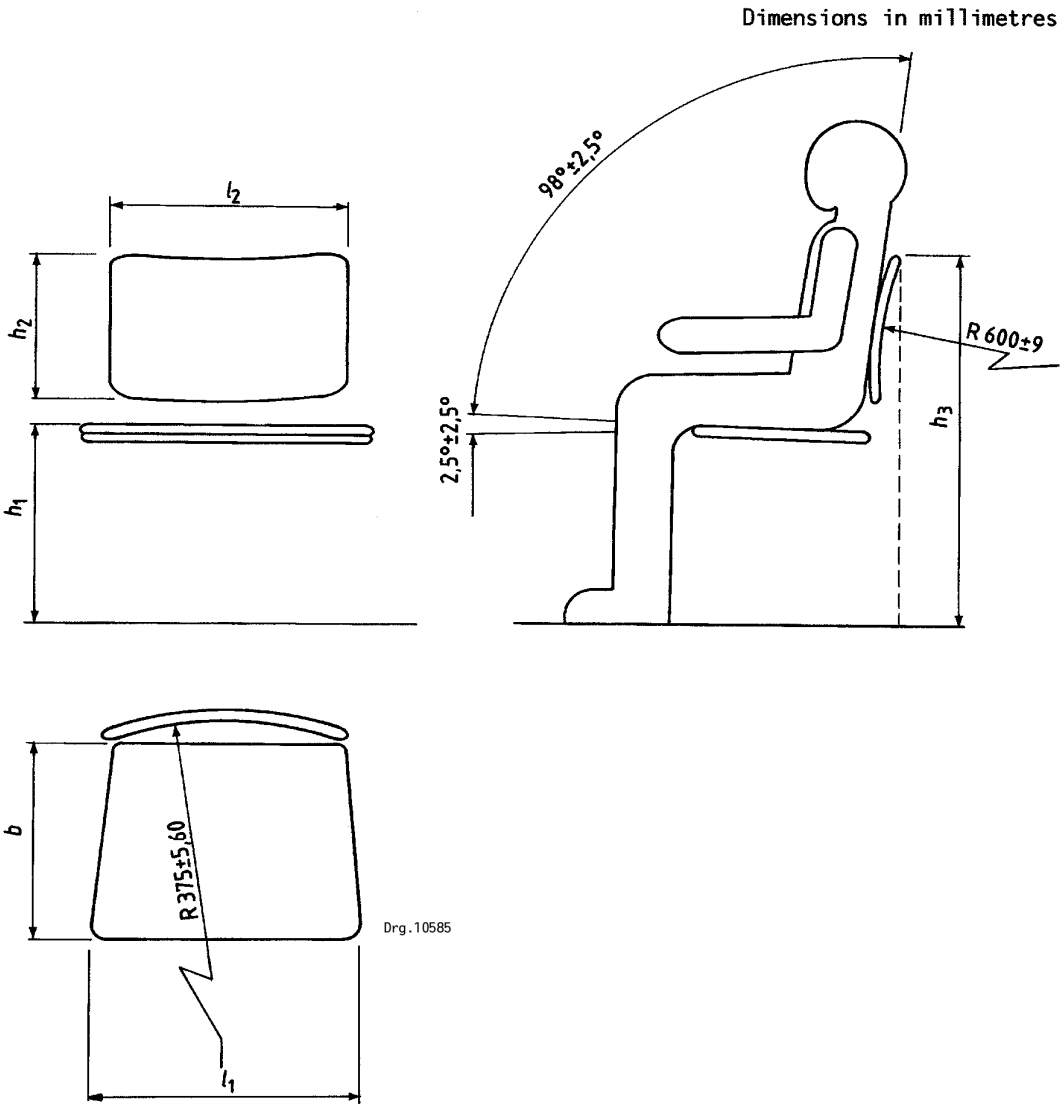

1	2	3	4	5	6	7
Size	**Dimensions** mm					
	h_1	h_2[a]	h_3[a]	l_1[a]	l_2[a]	b
A	300	175	575	300	250	265
B	325	175	600	300	250	265
C	350	175	617	310	280	290
D	375	175	690	350	300	325
E	425	175	750	400	350	375
	Tolerances					
	± 4	± 2	± 10	± 6	± 5	± 6
[a] Preferred dimension.						

Figure 10 — Dimensions of chairs for general use

©SABS. Licensed exclusively to Stephen Shole; License ID : M5PQ-XWVG-GETE.
Copying and network storage prohibited.
You can make one paper copy of the standard; No paper copy may be photocopied or reproduced in any way.

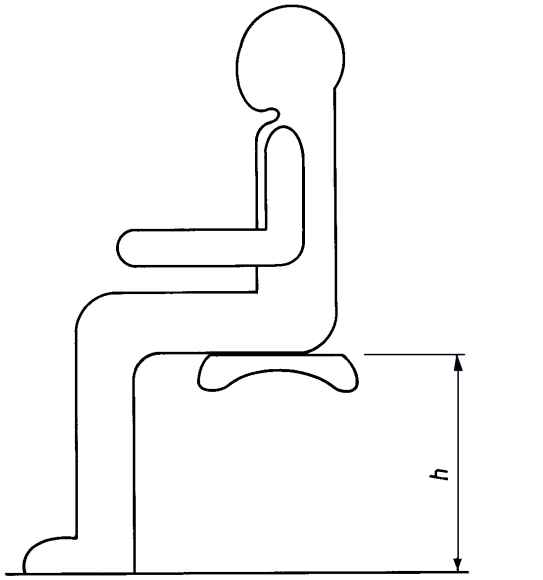

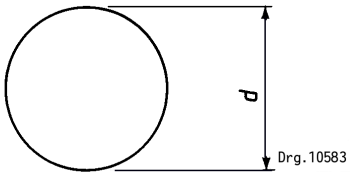

1	2	3
Size	**Dimensions** mm	
	h	*d*
A	380	285
B	460	285
C	600	285
D	700	285
	Tolerances	
	± 7	± 3

Figure 11 — Dimensions of laboratory stools

© SABS

©SABS. Licensed exclusively to Stephen Shole; License ID : M5PQ-XWVG-GETE.
Copying and network storage prohibited.
You can make one paper copy of the standard; No paper copy may be photocopied or reproduced in any way.

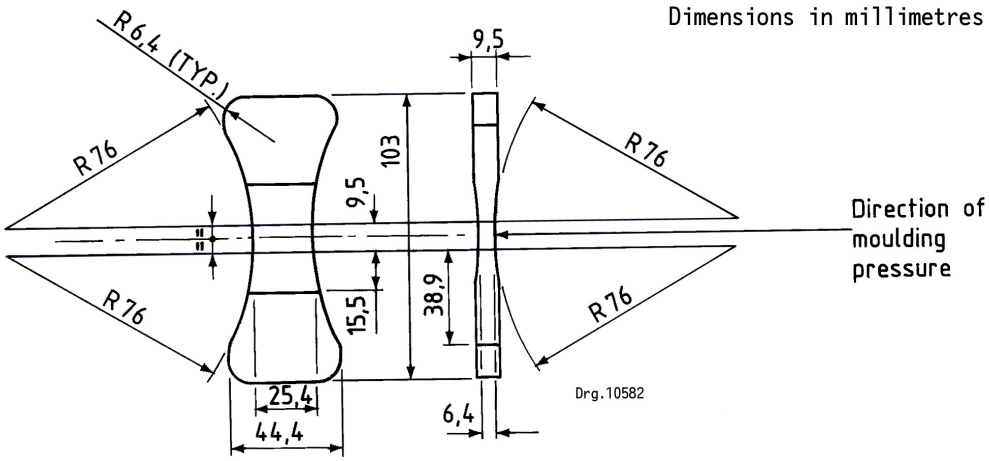

Figure 12 — Test specimen for tensile strength and elongation at break test

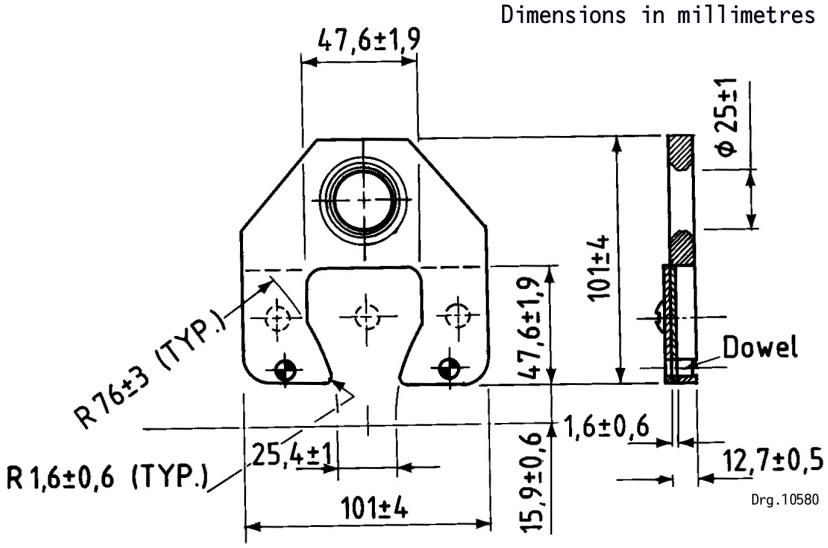

Figure 13 — Grip for tensile strength test

©SABS. Licensed exclusively to Stephen Shole; License ID : M5PQ-XWVG-GETE.
Copying and network storage prohibited.
You can make one paper copy of the standard; No paper copy may be photocopied or reproduced in any way.

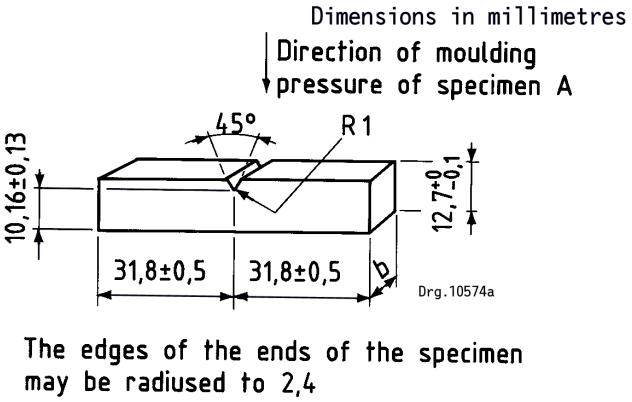

Figure 14 — Test specimen for impact test on thermoplastics materials

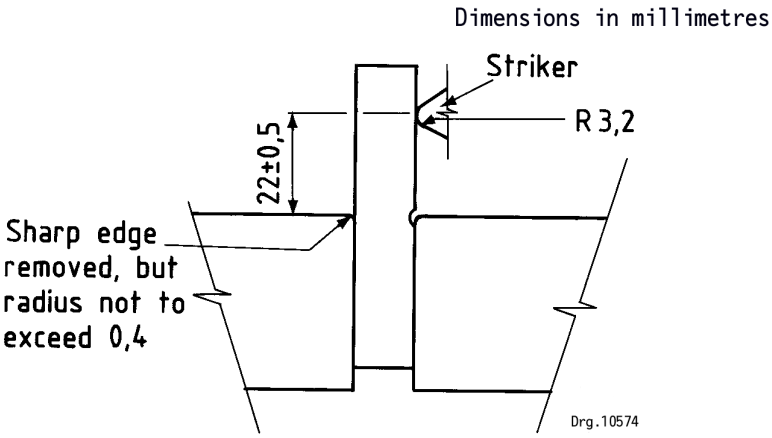

Figure 15 — Arrangement of test specimen set up for test

© SABS

©SABS. Licensed exclusively to Stephen Shole; License ID : M5PQ-XWVG-GETE.
Copying and network storage prohibited.
You can make one paper copy of the standard; No paper copy may be photocopied or reproduced in any way.

Annex A
(informative)

Quality evaluation of classroom furniture produced to the requirements laid down in this standard

A.1 Quality verification

A.1.1 When a purchaser requires ongoing verification of the quality of classroom furniture, it is suggested that, instead of concentrating solely on evaluation of the final product, he also direct his attention to the manufacturer's quality system. In this connection it should be noted that SANS 9001 covers the provisions of an integrated quality system.

A.1.2 If no information about the implementation of quality control or testing during manufacture is available to help in assessing the quality of a consignment and a purchaser wishes to establish, by inspection and testing of samples of the final product, whether a consignment of the units produced to this specification complies with its requirements, a sampling plan based on applicable statistical tables should be agreed upon between the manufacturer and the purchaser.

A.1.3 It should be noted that

a) such a sampling plan applies to fully manufactured products only; and

b) a consignment that in terms of the plan is deemed to comply with the specification could contain defective units to an extent proportional to that permitted by the relevant acceptance number(s) given in the sampling table.

©SABS. Licensed exclusively to Stephen Shole; License ID : M5PQ-XWVG-GETE.
Copying and network storage prohibited.
You can make one paper copy of the standard; No paper copy may be photocopied or reproduced in any way.

Annex B
(normative)

Classroom furniture

B.1 Classroom furniture that complies with this standard is shown in figures B.1 to B.24.

NOTE For quality verification see annex A.

B.2 Timber shall be certified in accordance with the relevant national department (see foreword).

B.3 All wooden components shall be coated with synthetic resin lacquer.

Dimensions in millimetres

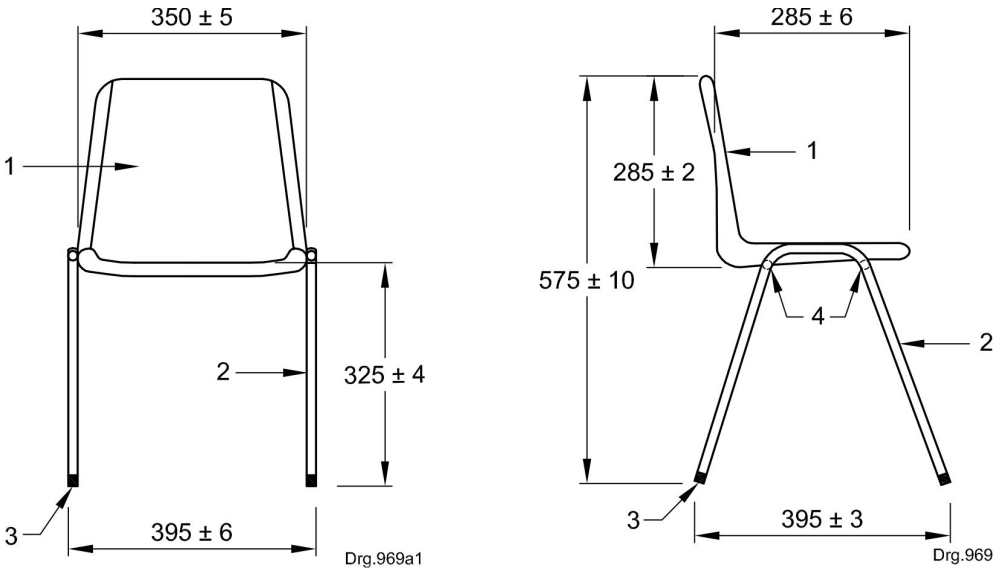

a) Chair front view **b) Chair side view**

Key

1 seat
2 stackable steel frame
3 ferrules
4 acceptable screws

The seat shall be manufactured from virgin injection moulded polypropylene copolymer.

The stackable steel frame shall be made from ø 19,05 mm tubing manufactured in accordance with SANS 657-4, and shall be coated with baked epoxy or polyester coating finish manufactured in accordance with SANS 1274.

The legs of the chair shall be fitted with acceptable ferrules to all legs.

The seat shall be fitted to the steel frame with acceptable screws.

Figure B.1 — Grade "R" polypropylene chair

© SABS

©SABS. Licensed exclusively to Stephen Shole; License ID : M5PQ-XWVG-GETE.
Copying and network storage prohibited.
You can make one paper copy of the standard; No paper copy may be photocopied or reproduced in any way.

Dimensions in millimetres

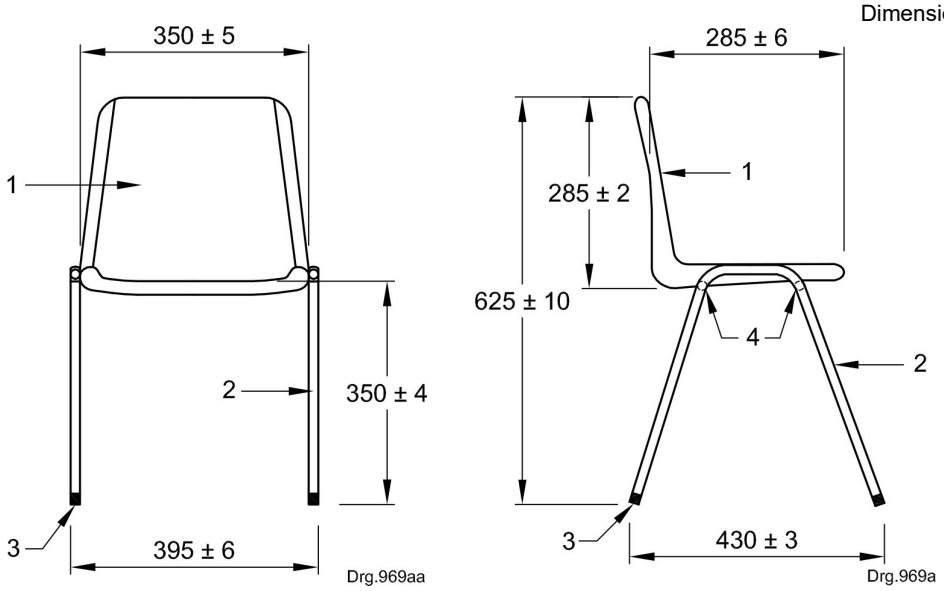

a) Chair front view **b) Chair side view**

Key

1 seat
2 stackable steel frame
3 ferrules
4 acceptable screws

The seat shall be manufactured from virgin injection moulded polypropylene copolymer.

The stackable steel frame shall be made from ø 19,05 mm tubing manufactured in accordance with SANS 657-4, and shall be coated with baked epoxy or polyester coating finish manufactured in accordance with SANS 1274.

The legs of the chair shall be fitted with acceptable ferrules to all legs.

The seat shall be fitted to the steel frame with acceptable screws.

Figure B.2 — Lower primary chair — Polypropylene

©SABS. Licensed exclusively to Stephen Shole; License ID : M5PQ-XWVG-GETE.
Copying and network storage prohibited.
You can make one paper copy of the standard; No paper copy may be photocopied or reproduced in any way.

Dimensions in millimetres

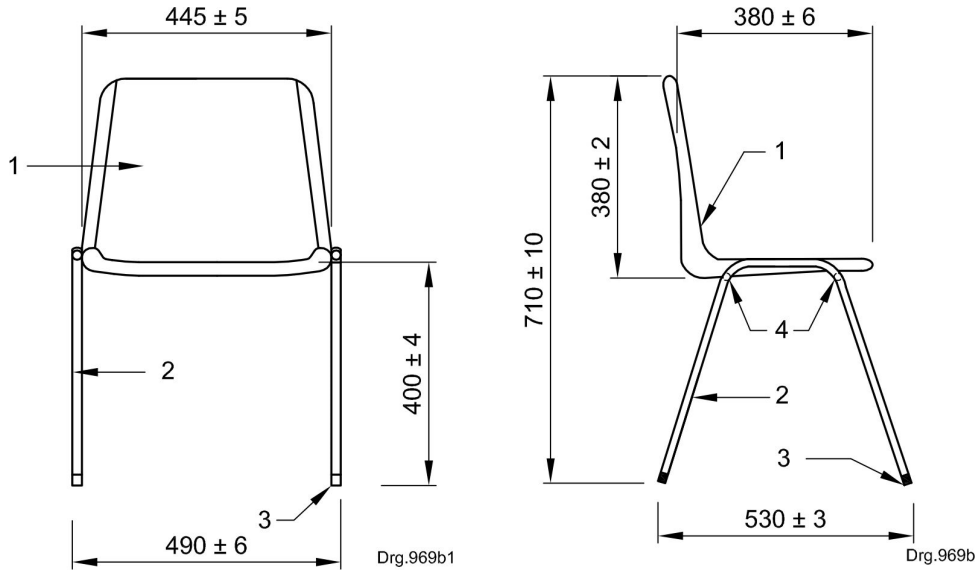

a) Chair front view **b) Chair side view**

Key

1 seat
2 stackable steel frame
3 ferrules
4 acceptable screws

The seat shall be manufactured from virgin injection moulded polypropylene copolymer.

The stackable steel frame shall be made from ø 19,05 mm tubing manufactured in accordance with SANS 657-4, and shall be coated with baked epoxy or polyester coating finish manufactured in accordance with SANS 1274.

The legs of the chair shall be fitted with acceptable ferrules to all legs.

The seat shall be fitted to the steel frame with acceptable screws.

Figure B.3 — Higher primary chair — Polypropylene

© SABS

©SABS. Licensed exclusively to Stephen Shole; License ID : M5PQ-XWVG-GETE.
Copying and network storage prohibited.
You can make one paper copy of the standard; No paper copy may be photocopied or reproduced in any way.

Dimensions in millimetres

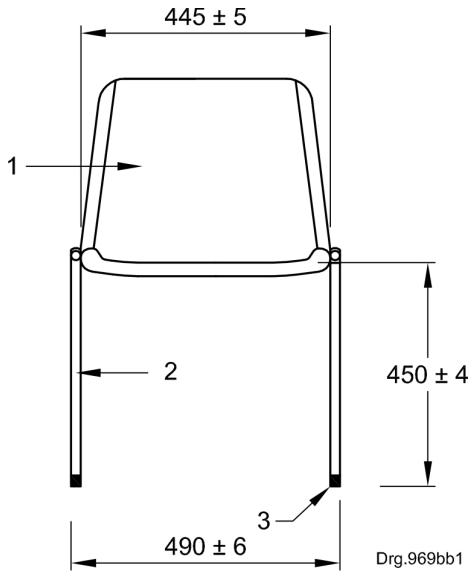

a) Chair front view

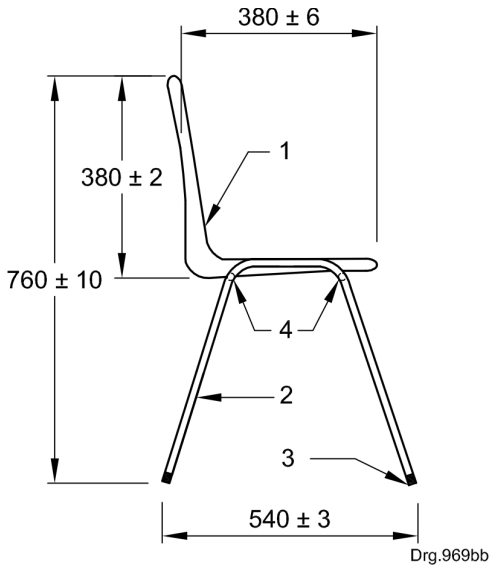

b) Chair side view

Key

1 seat
2 stackable steel frame
3 ferrules
4 acceptable screws

The seat shall be manufactured from virgin injection moulded polypropylene copolymer.

The stackable steel frame shall be made from ø 19,05 mm tubing manufactured in accordance with SANS 657-4, and shall be coated with baked epoxy or polyester coating finish manufactured in accordance with SANS 1274.

The legs of the chair shall be fitted with acceptable ferrules to all legs.

The seat shall be fitted to the steel frame with acceptable screws.

Figure B.4 — Secondary chair — Polypropylene

©SABS. Licensed exclusively to Stephen Shole; License ID : M5PQ-XWVG-GETE.
Copying and network storage prohibited.
You can make one paper copy of the standard; No paper copy may be photocopied or reproduced in any way.

Dimensions in millimetres

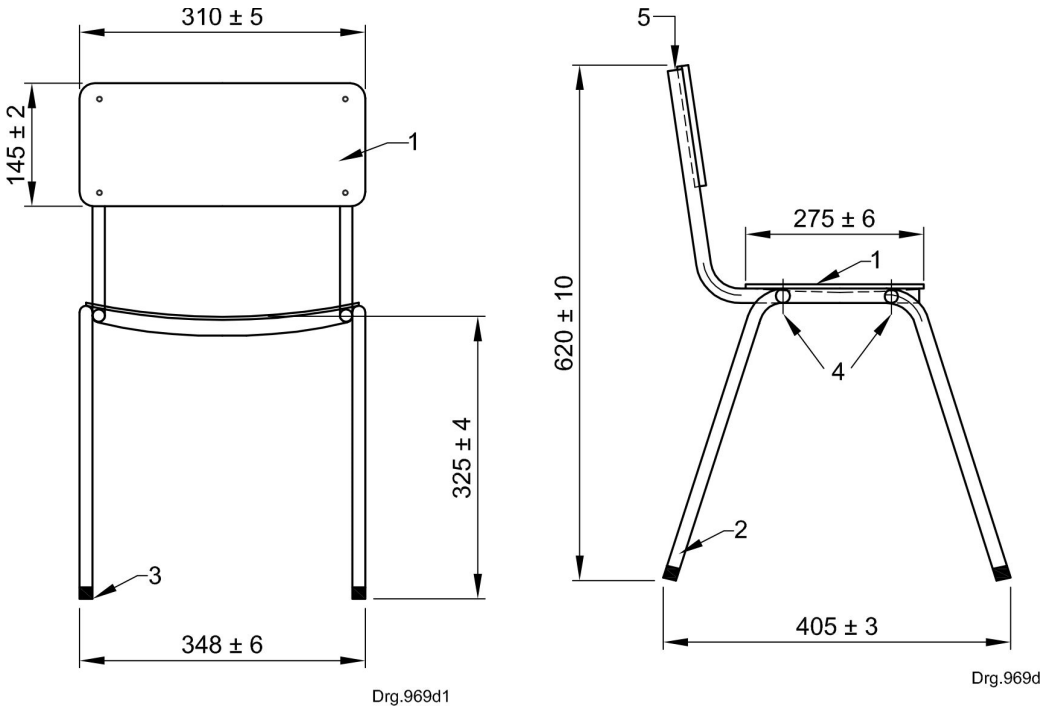

a) Chair front view **b) Chair side view**

Key

1 seat and back
2 stackable steel frame
3 ferrules
4 pop rivets
5 plugs

The seat and back shall be smooth on both sides, made of 6,4 mm hardboard manufactured in accordance with SANS 540-1.

The stackable steel frame shall be made from ø 19,05 mm tubing manufactured in accordance with SANS 657-4, and shall be coated with baked epoxy or polyester coating finish manufactured in accordance with SANS 1274.

The legs of the chair shall be fitted with acceptable ferrules to all legs. The steel uprights of the chair shall be fitted with acceptable plugs.

The seat and back shall be ergonomically shaped and fitted to the steel frame with acceptable pop rivets.

Figure B.5 — Grade "R" chair —Hardboard

© SABS

©SABS. Licensed exclusively to Stephen Shole; License ID : M5PQ-XWVG-GETE.
Copying and network storage prohibited.
You can make one paper copy of the standard; No paper copy may be photocopied or reproduced in any way.

Dimensions in millimetres

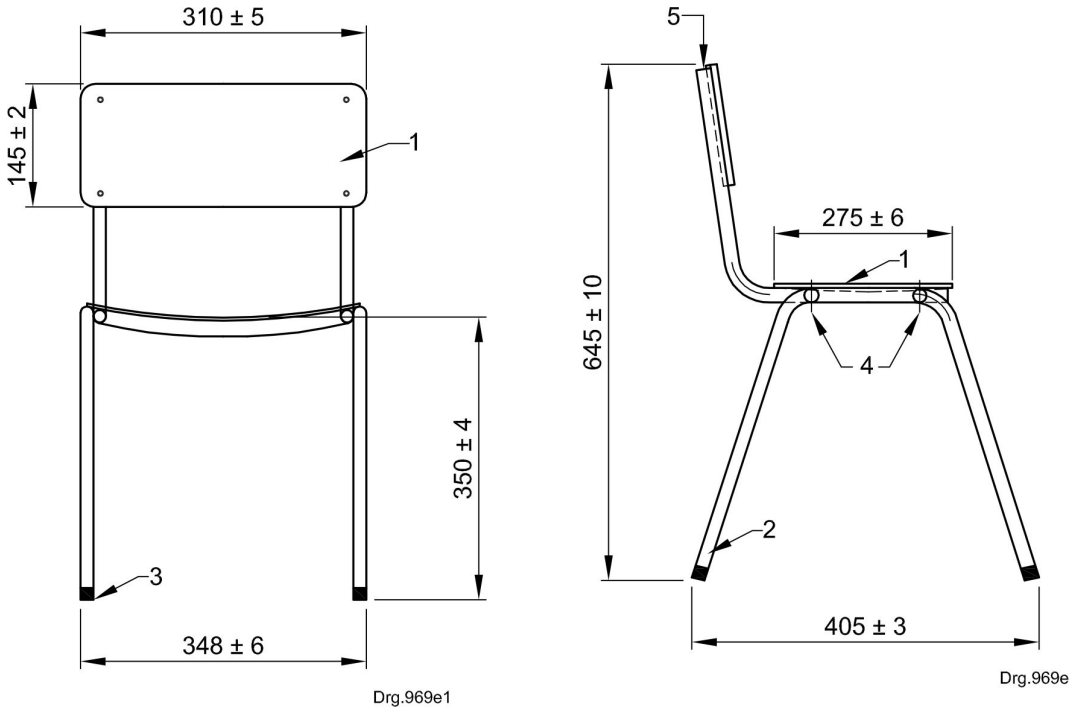

a) Chair front view **b) Chair side view**

Key

1 seat and back
2 stackable steel frame
3 ferrules
4 pop rivets
5 plugs

The seat and back shall be smooth on both sides, made of 6, 4 mm hardboard manufactured in accordance with SANS 540-1.

The stackable steel frame shall be made from ø 19,05 mm tubing manufactured in accordance with SANS 657-4, and shall be coated with baked epoxy or polyester coating finish manufactured in accordance with SANS 1274.

The legs of the chair shall be fitted with acceptable ferrules to all legs. The steel uprights of the chair shall be fitted with accepted plugs.

The seat and back shall be ergonomically shaped and fitted to the steel frame with acceptable pop rivets.

Figure B.6 — Lower primary chair —Hardboard

©SABS. Licensed exclusively to Stephen Shole; License ID : M5PQ-XWVG-GETE.
Copying and network storage prohibited.
You can make one paper copy of the standard; No paper copy may be photocopied or reproduced in any way.

Dimensions in millimetres

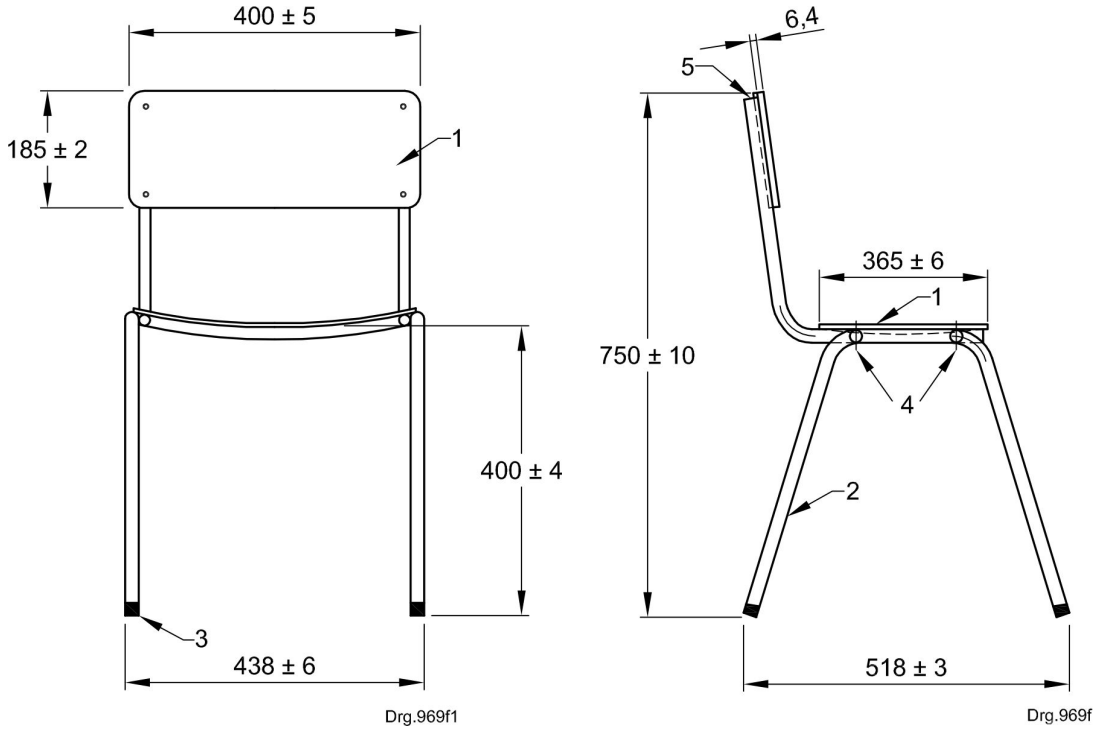

a) Chair front view

b) Chair side view

Key

1 seat and back
2 stackable steel frame
3 ferrules
4 pop rivets
5 plugs

The seat and back shall be smooth on both sides, made of 6,4 mm hardboard, manufactured in accordance with SANS 540-1.

The stackable steel frame shall be made from ø 19,05 mm tubing manufactured in accordance with SANS 657-4, and shall be coated with baked epoxy or polyester coating finish manufactured in accordance with SANS 1274.

The legs of the chair shall be fitted with acceptable ferrules to all legs. The steel uprights of the chair shall be fitted with acceptable plugs.

The seat and back shall be ergonomically shaped and fitted to the steel frame with acceptable pop rivets.

Figure B.7 — Higher primary chair —Hardboard

© SABS

©SABS. Licensed exclusively to Stephen Shole; License ID : M5PQ-XWVG-GETE.
Copying and network storage prohibited.
You can make one paper copy of the standard; No paper copy may be photocopied or reproduced in any way.

Dimensions in millimetres

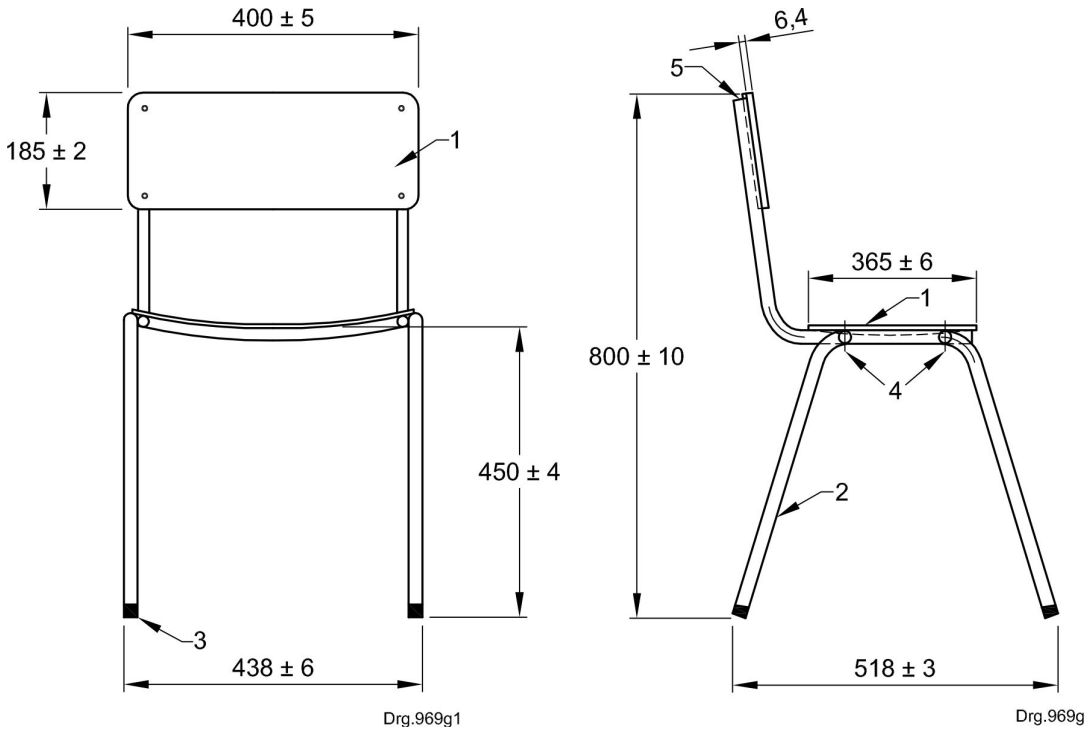

a) Chair front view **b) Chair side view**

Key

1 seat and back
2 stackable steel frame
3 ferrules
4 pop rivets
5 plugs

The seat and back shall be smooth on both sides, made of 6,4 mm hardboard, manufactured in accordance with SANS 540-1.

The stackable steel frame shall be made from ø 19,05 mm tubing manufactured in accordance with SANS 657-4, and shall be coated with baked epoxy or polyester coating finish manufactured in accordance with SANS 1274.

The legs of the chair shall be fitted with acceptable ferrules to all legs. The steel uprights of the chair shall be fitted with acceptable plugs.

The seat and back shall be ergonomically shaped and fitted to the steel frame with acceptable pop rivets.

Figure B.8 — Secondary primary chair —Hardboard

©SABS. Licensed exclusively to Stephen Shole; License ID : M5PQ-XWVG-GETE.
Copying and network storage prohibited.
You can make one paper copy of the standard; No paper copy may be photocopied or reproduced in any way.

Dimensions in millimetres

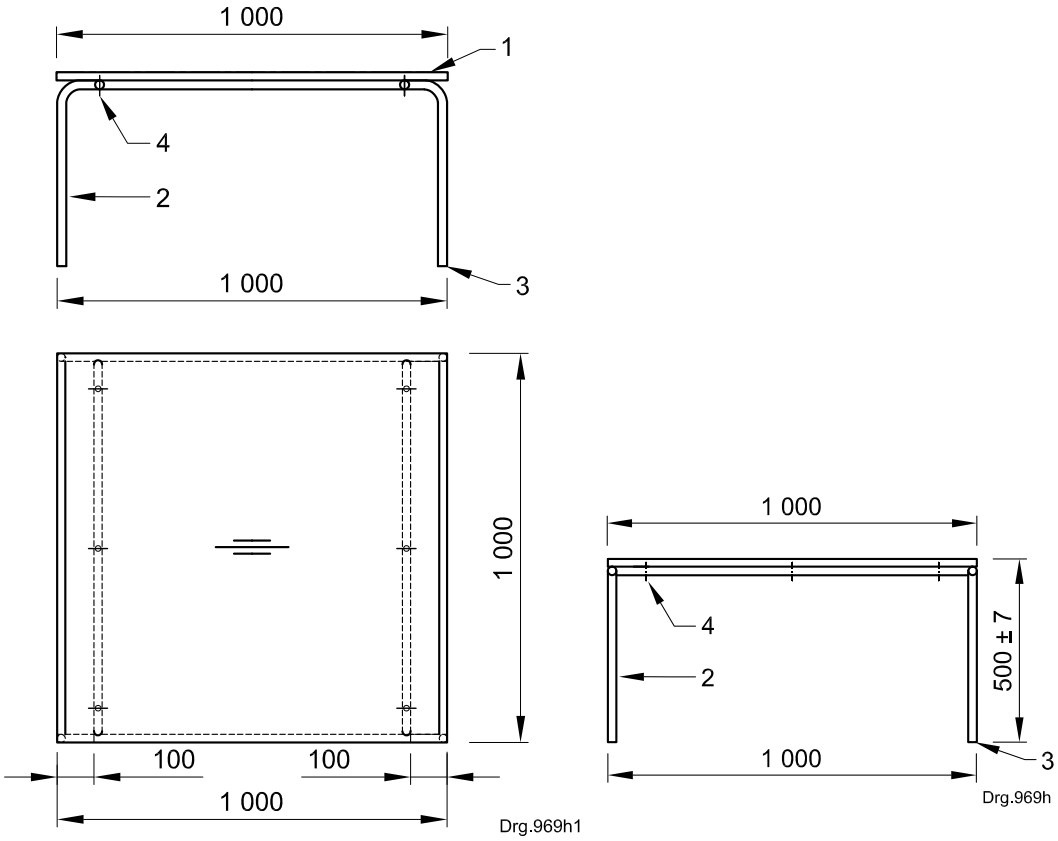

a) Table side and top view **b) Table back view**

Key

1 table top
2 steel frame
3 plugs
4 tamper proof screws

The top of a table shall be made from 21 mm solid *Saligna* hardwood (*Eucalyptus grandis*), manufactured in accordance with SANS 1460.

The steel frame shall be made from ø 25 mm tubing manufactured in accordance with SANS 657-4, and shall be coated with baked epoxy or polyester coating finish manufactured in accordance with SANS 1274.

The legs of the table shall be fitted with acceptable plugs to all legs.

The table top shall be fitted to the steel frame with tamper proof screws.

Figure B.9 — Grade "R" table

© SABS

©SABS. Licensed exclusively to Stephen Shole; License ID : M5PQ-XWVG-GETE.
Copying and network storage prohibited.
You can make one paper copy of the standard; No paper copy may be photocopied or reproduced in any way.

Dimensions in millimetres

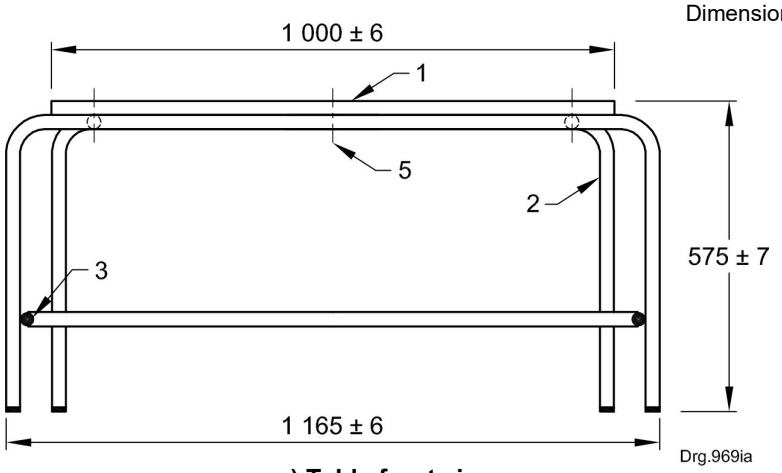

a) Table front view

Dimensions in millimetres

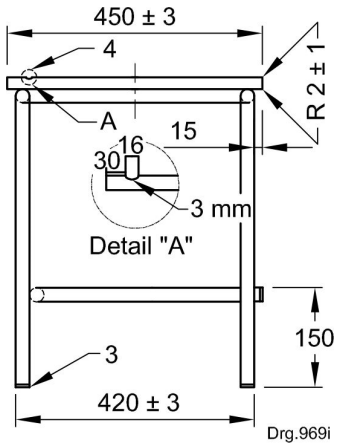

b) Table side view

Key

1 table top
2 stackable steel frame
3 plugs
4 pencil groove
5 tamper proof screws

The top of a table shall be made from 21 mm solid *Saligna* hardwood (*Eucalyptus grandis*), manufactured in accordance with SANS 1460.

The stackable steel frame shall be made from ø 25 mm tubing manufactured in accordance with SANS 657-4, and shall be coated with baked epoxy or polyester coating finish manufactured in accordance with SANS 1274.

The open ends of the legs and foot rail of the table shall be fitted with acceptable plugs to all legs.

The table top shall be profiled with a 16 mm × 3 mm pencil grove.

The table top shall be fitted to the steel frame with tamper proof screws.

Figure B.10 — Lower primary double table — *Saligna*

©SABS. Licensed exclusively to Stephen Shole; License ID : M5PQ-XWVG-GETE.
Copying and network storage prohibited.
You can make one paper copy of the standard; No paper copy may be photocopied or reproduced in any way.

Dimensions in millimetres

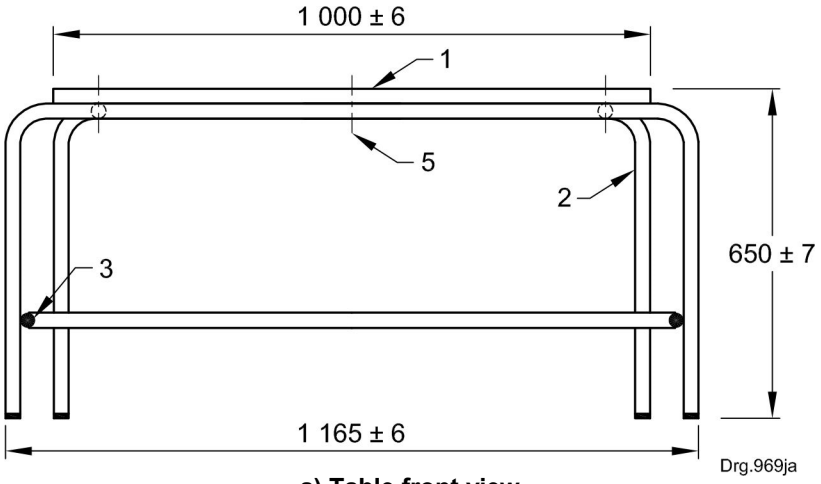

a) Table front view

Dimensions in millimetres

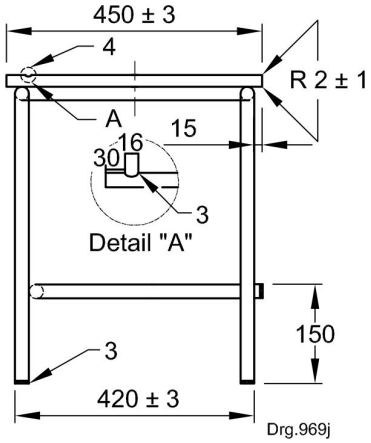

b) Table side view

Key

1 table top
2 stackable steel frame
3 plugs
4 pencil groove
5 tamper proof screws

The top of a table shall be made from 21 mm solid *Saligna* hardwood (*Eucalyptus grandis*), manufactured in accordance with SANS 1460.

The stackable steel frame shall be made from ø 25 mm tubing manufactured in accordance with SANS 657-4, and shall be coated with baked epoxy or polyester coating finish manufactured in accordance with SANS 1274.

The open ends of the legs and foot rail of the table shall be fitted with acceptable plugs

The table top shall be profiled with a 16 mm × 3 mm pencil grove.

The table top shall be fitted to the steel frame with tamper proof screws

Figure B.11 — Higher primary double table — *Saligna*

© SABS

©SABS. Licensed exclusively to Stephen Shole; License ID : M5PQ-XWVG-GETE.
Copying and network storage prohibited.
You can make one paper copy of the standard; No paper copy may be photocopied or reproduced in any way.

Dimensions in millimetres

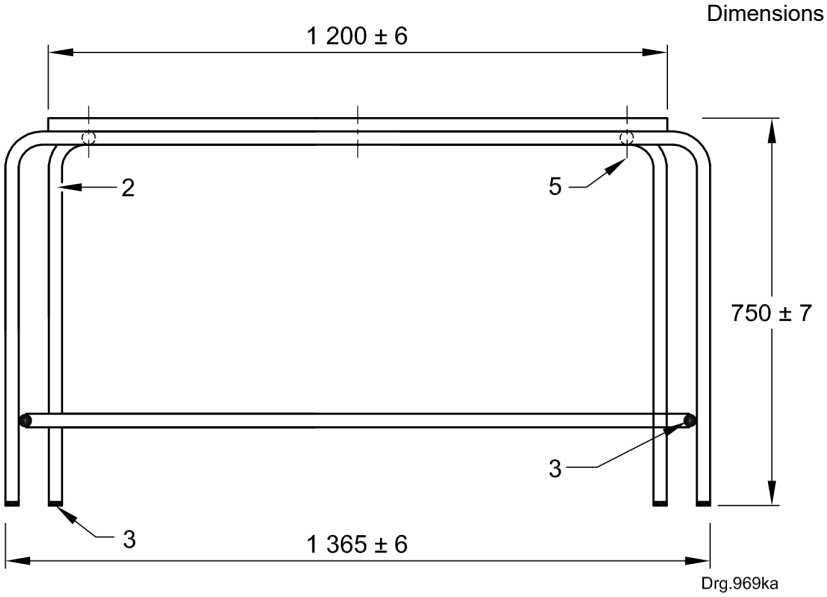

a) Table front view

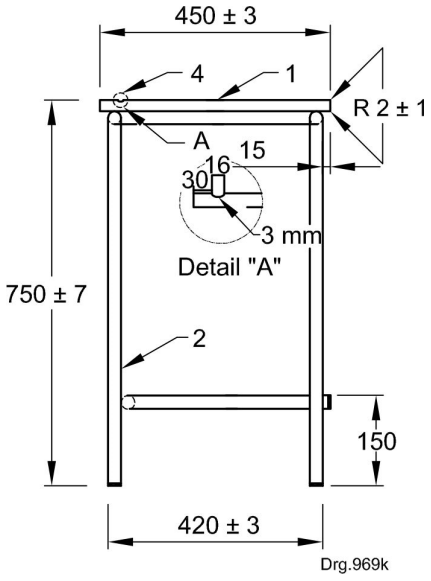

b) Table side view

Key

1 table top
2 stackable steel frame
3 plugs
4 pencil groove
5 tamper proof screws

The top of a table shall be made from 21 mm solid *Saligna* hardwood (*Eucalyptus grandis*), manufactured in accordance with SANS 1460.

The stackable steel frame shall be made from ø 25 mm tubing manufactured in accordance with SANS 657-4, and shall be coated with baked epoxy or polyester coating finish manufactured in accordance with SANS 1274.

The open ends of the legs and foot rail of the table shall be fitted with acceptable plugs to all legs.

The table top shall be profiled with a 16 mm × 3 mm pencil grove.

The table top shall be fitted to the steel frame with tamper proof screws.

Figure B.12 — Secondary double table — *Saligna*

©SABS. Licensed exclusively to Stephen Shole; License ID : M5PQ-XWVG-GETE.
Copying and network storage prohibited.
You can make one paper copy of the standard; No paper copy may be photocopied or reproduced in any way.

Dimensions in millimetres

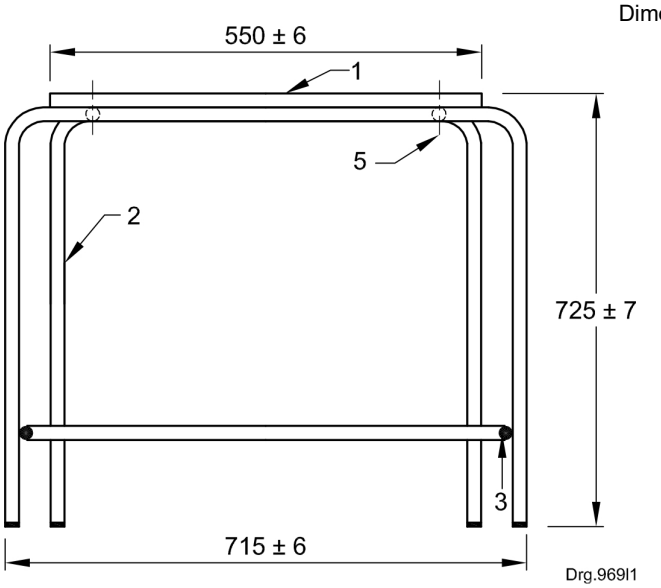

a) Table front view

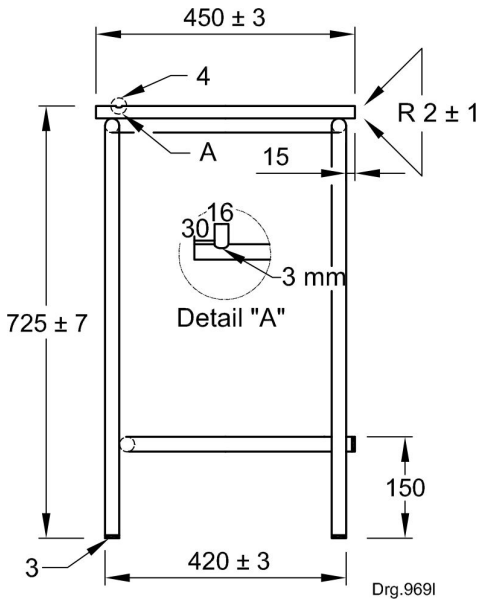

b) Table side view

Key

1 table top
2 stackable steel frame
3 plugs
4 pencil groove
5 tamper proof screws

The top of a table shall be made from 21 mm solid *Saligna* hardwood (*Eucalyptus grandis*), manufactured in accordance with SANS 1460.

The stackable steel frame shall be made from ø 25 mm tubing manufactured accordance with SANS 657-4, and shall be coated with baked epoxy or polyester coating finish manufactured in accordance with SANS 1274.

The open ends of the legs and foot rail of the table shall be fitted with acceptable plugs.

The table top shall be profiled with a 16 mm × 3 mm pencil grove.

The table top shall be fitted to the steel frame with tamper proof screws.

Figure B.13 — 550 mm Secondary single table — *Saligna*

© SABS

©SABS. Licensed exclusively to Stephen Shole; License ID : M5PQ-XWVG-GETE.
Copying and network storage prohibited.
You can make one paper copy of the standard; No paper copy may be photocopied or reproduced in any way.

Dimensions in millimetres

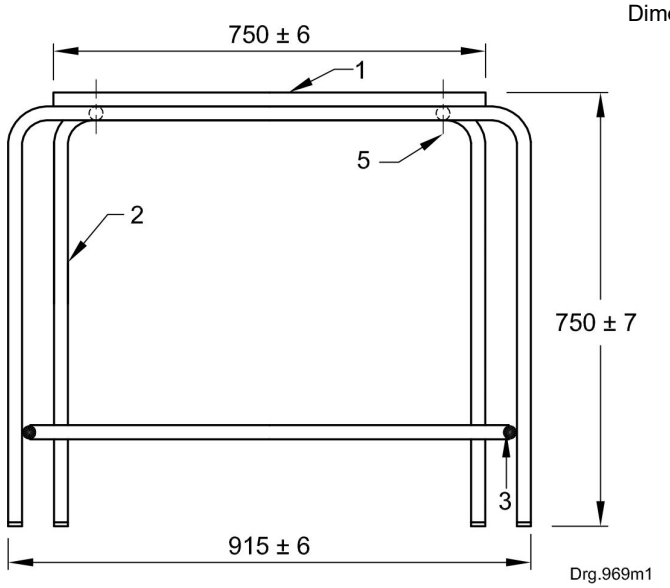

a) Table front view

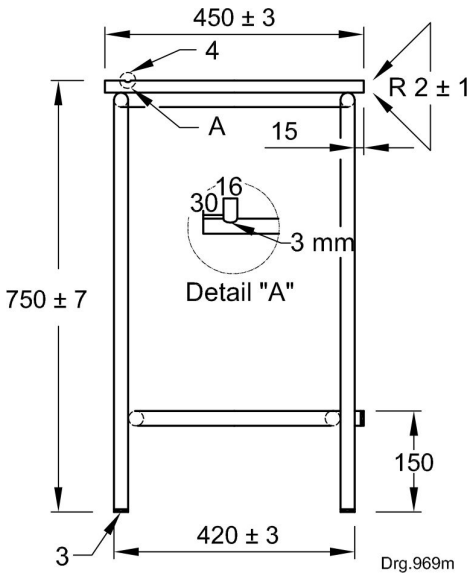

b) Table side view

Key

1 table top
2 stackable steel frame
3 plugs
4 pencil groove
5 tamper proof screws

The top of a table shall be made from 21 mm solid *Saligna* hardwood (*Eucalyptus grandis*), manufactured in accordance with SANS 1460.

The stackable steel frame shall be made from ø 25 mm tubing manufactured in accordance with SANS 657-4, and shall be coated with baked epoxy or polyester coating finish manufactured in accordance with SANS 1274.

The open ends of the legs and foot rail of the table shall be fitted with acceptable plugs to all legs.

The table top shall be profiled with a 16 mm × 3 mm pencil grove.

The table top shall be fitted to the steel frame with tamper proof screws.

Figure B.14 — 750 mm Secondary single table — *Saligna*

©SABS. Licensed exclusively to Stephen Shole; License ID : M5PQ-XWVG-GETE.
Copying and network storage prohibited.
You can make one paper copy of the standard; No paper copy may be photocopied or reproduced in any way.

Dimensions in millimetres

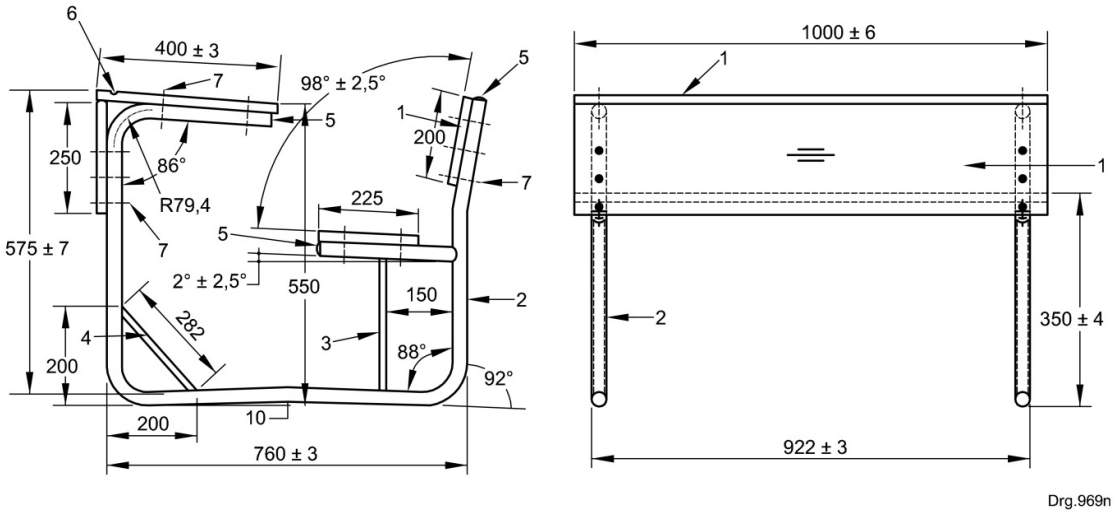

a) 1 000 mm Combination desk front and side view

Key

1 desk top, seat, front and back slat
2 main steel frame
3 vertical seat support
4 stay
5 plugs
6 pencil groove
7 bolts and nuts

The desk's top, seat and front and back slat shall be made from 21 mm solid *Saligna* hardwood (*Eucalyptus grandis*) manufactured in accordance with SANS 1460.

The main steel frame shall be made from ø 31,75 mm tubing manufactured in accordance with SANS 657-4.

The vertical seat support shall be made from ø 15,88 mm tubing manufactured in accordance with SANS 657-4.

The stay shall be made from 15,88 mm tubing manufactured in accordance with SANS 657-4,and shall be coated with baked epoxy or polyester coating finish manufactured in accordance with SANS 1274.

The steel frame of the desk shall be fitted with acceptable plugs to all open ends.

The desktop shall be profiled with a 16 mm × 3 mm pencil grove.

The desk's timber component shall be fitted to the steel frame with M8 bolts and suitable locknut.

Figure B.15 — Lower primary double combination desk — *Saligna*

© SABS

©SABS. Licensed exclusively to Stephen Shole; License ID : M5PQ-XWVG-GETE.
Copying and network storage prohibited.
You can make one paper copy of the standard; No paper copy may be photocopied or reproduced in any way.

Dimensions in millimetres

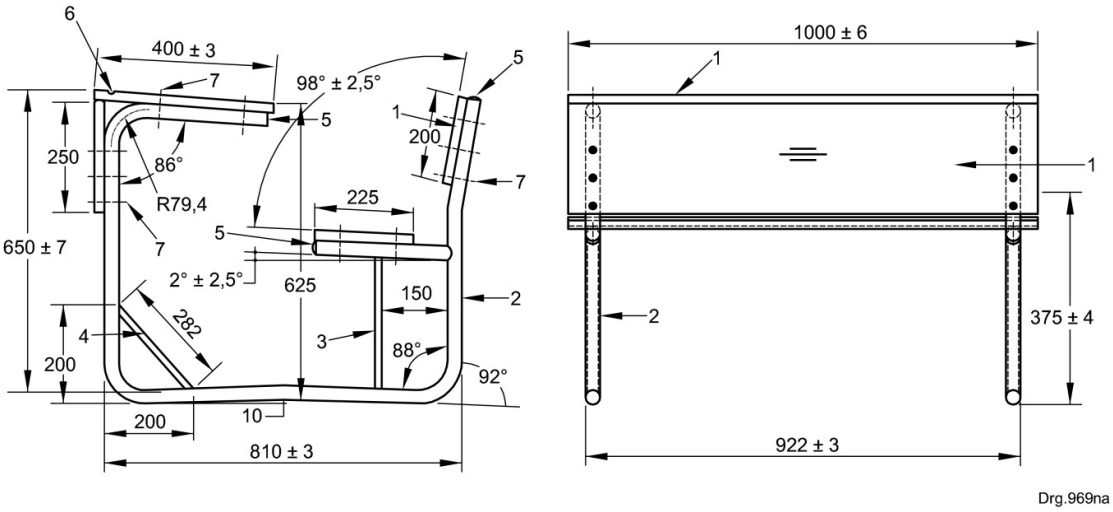

a) 1 000 mm Combination desk front and side view

Key

1 desk top, seat, front and back slat
2 main steel frame
3 vertical seat support
4 stay
5 plugs
6 pencil groove
7 bolts and nuts

The desk's top, seat and front and back slat shall be made from 21 mm solid *Saligna* hardwood (*Eucalyptus grandis*) manufactured in accordance with SANS 1460.

The main steel frame shall be made from ø 31,75 mm tubing manufactured in accordance with SANS 657-4.

The vertical seat support shall be made from ø 15,88 mm tubing manufactured in accordance with SANS 657-4.

The stay shall be made from 15,88 mm tubing manufactured in accordance with SANS 657-4,and shall be coated with baked epoxy or polyester coating finish manufactured in accordance with SANS 1274.

The steel frame of the desk shall be fitted with acceptable plugs to all open ends.

The desktop shall be profiled with a 16 mm × 3 mm pencil grove.

The desk's timber component shall be fitted to the steel frame with M8 bolts and suitable locknut.

Figure B.16— Higher primary double combination desk — *Saligna*

©SABS. Licensed exclusively to Stephen Shole; License ID : M5PQ-XWVG-GETE.
Copying and network storage prohibited.
You can make one paper copy of the standard; No paper copy may be photocopied or reproduced in any way.

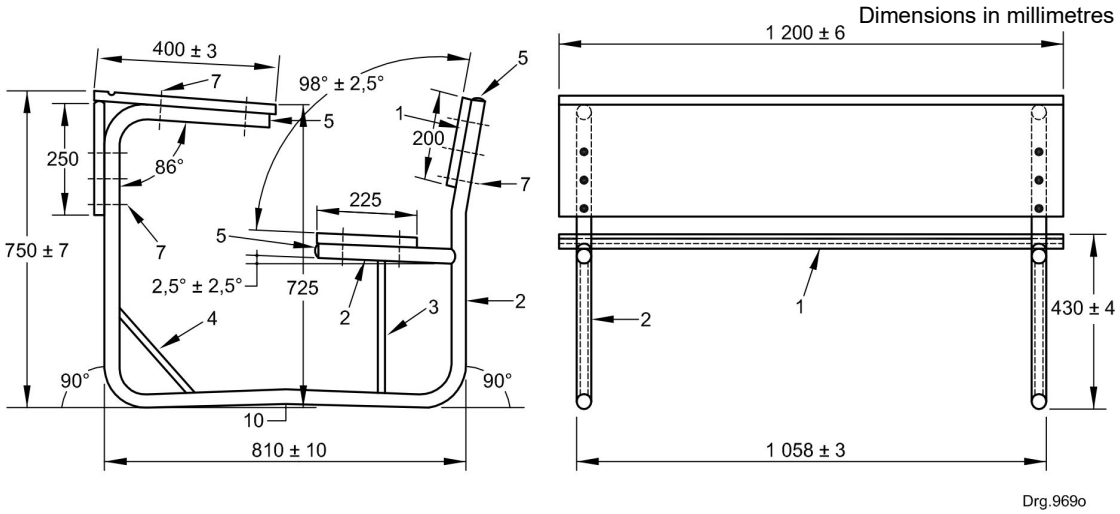

a) 1 200 mm Combination desk front and side view

Key

1 desk top, seat, front and back slat
2 main steel frame
3 vertical seat support
4 stay
5 plugs
6 pencil groove
7 bolts and nuts

The desk's top, seat and front and back slat shall be made from 21 mm solid *Saligna* hardwood (*Eucalyptus grandis*) manufactured in accordance with SANS 1460.

The main steel frame shall be made from ø 31,75 mm tubing manufactured in accordance with SANS 657-4. The vertical stay shall be made from ø 15,88 mm tubing manufactured in accordance with SANS 657-4.

The stay shall be made from 15,88 mm tubing manufactured in accordance with SANS 657-4, and shall be coated with baked epoxy or polyester coating finish manufactured in accordance with SANS 1274.

The steel frame of the desk shall be fitted with acceptable plugs to all open ends.

The desktop shall be profiled with a 16 mm × 3 mm pencil grove.

The desk's timber components shall be fitted to the steel frame with M8 bolts and suitable locknut

Figure B.17 — Secondary double combination desk — *Saligna*

© SABS

©SABS. Licensed exclusively to Stephen Shole; License ID : M5PQ-XWVG-GETE.
Copying and network storage prohibited.
You can make one paper copy of the standard; No paper copy may be photocopied or reproduced in any way.

Dimensions in millimetres

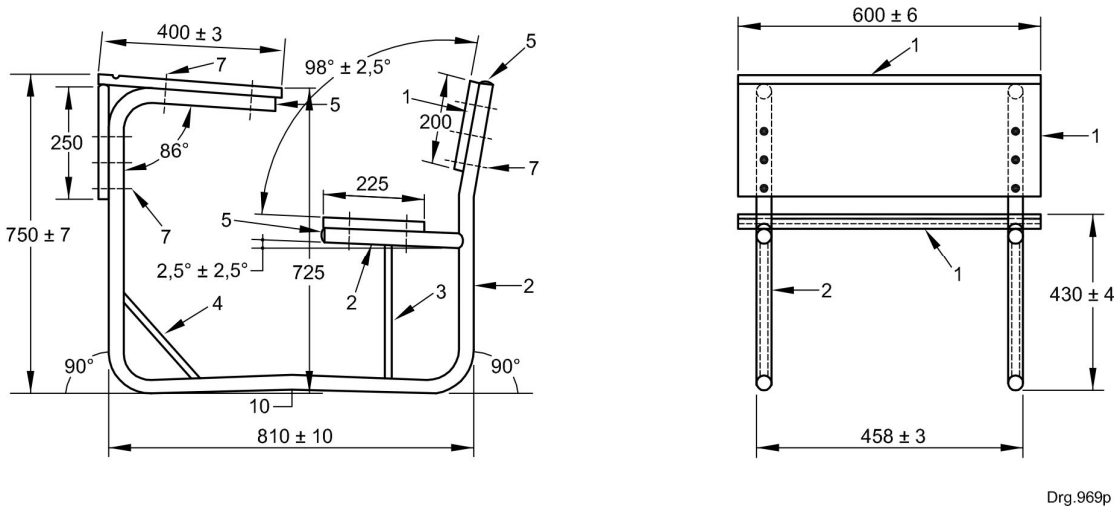

a) 600 mm Combination desk front and side view

Key

1 desk top, seat, front and back slat
2 main steel frame
3 vertical seat support
4 stay
5 plugs
6 pencil groove
7 bolts and nuts

The desk's top, seat and front and back slat shall be made from 21 mm solid *Saligna* hardwood (*Eucalyptus grandis*) manufactured in accordance with SANS 1460.

The main steel frame shall be made from ø 31,75 mm tubing manufactured in accordance with SANS 657-4.

The vertical seat support shall be made from ø 15,88 mm tubing manufactured in accordance with SANS 657-4.

The stay shall be made from 15,88 mm tubing manufactured in accordance with SANS 657-4, and shall be coated with baked epoxy or polyester coating finish manufactured in accordance with SANS 1274.

The steel frame of the desk shall be fitted with acceptable plugs to all open ends.

The desktop shall be profiled with a 16 mm × 3 mm pencil grove.

The desk timber component shall be fitted to the steel frame with M8 bolts and suitable locknut.

Figure B.18 — Secondary single combination desk — *Saligna*

©SABS. Licensed exclusively to Stephen Shole; License ID : M5PQ-XWVG-GETE.
Copying and network storage prohibited.
You can make one paper copy of the standard; No paper copy may be photocopied or reproduced in any way.

Dimensions in millimetres

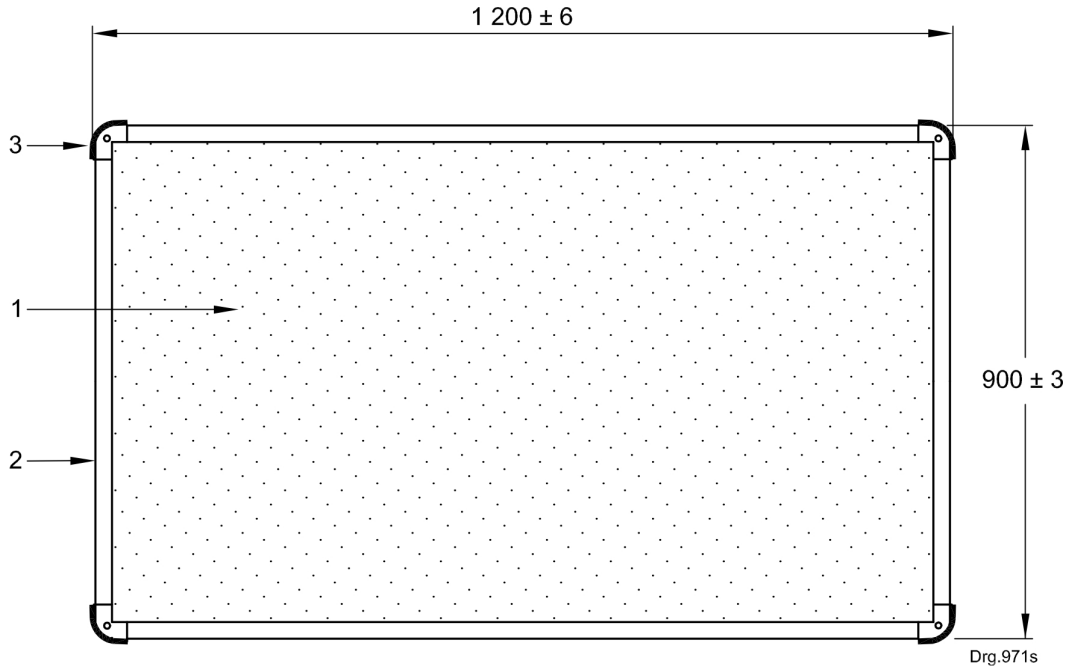

Key

1 carpet
2 frame
3 plastic inserts

A 6 mm, acceptable carpet, bonded with glue to the soft board substrate, and manufactured in accordance with SANS 540-1.

The frame around the board shall be manufactured from aluminium.

The plastic inserts around the corners shall be used to conceal the holes for fixing the notice board to a wall.

Figure B.19 — Notice board

© SABS

©SABS. Licensed exclusively to Stephen Shole; License ID : M5PQ-XWVG-GETE.
Copying and network storage prohibited.
You can make one paper copy of the standard; No paper copy may be photocopied or reproduced in any way.

Dimensions in millimetres

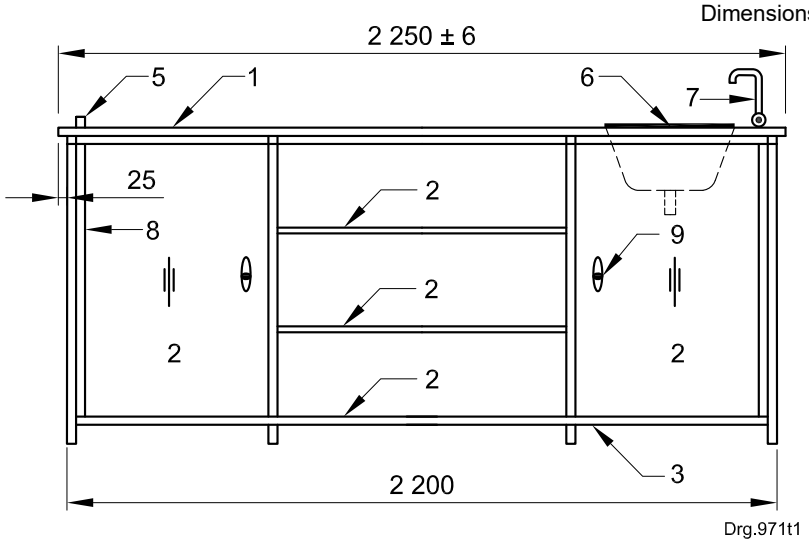

a) Demonstration desk front view

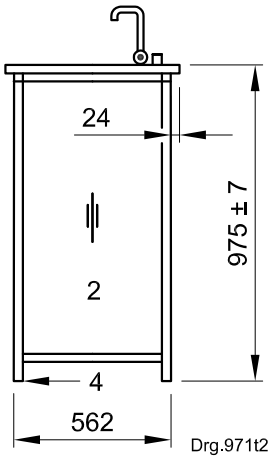

b) Demonstration desk side view

Figure B.20 — Teacher's demonstration desk — *Saligna*

©SABS. Licensed exclusively to Stephen Shole; License ID : M5PQ-XWVG-GETE.
Copying and network storage prohibited.
You can make one paper copy of the standard; No paper copy may be photocopied or reproduced in any way.

Dimensions in millimetres



c) Demonstration desk top view

Key

1 top
2 doors, divisions, backs, shelves and bottom
3 steel frame
4 plugs
5 gas tap
6 sink and waste system
7 tap
8 hinges
9 lock and handle

The top of a demonstration desk shall be made from 21 mm solid *Saligna* hardwood (*Eucalyptus grandis*), manufactured in accordance with SANS 1460.

The doors, divisions, backs, shelves and bottom shall be manufactured from matching, veneered, 16 mm thick particle board, manufactured in accordance with SANS 929.

The steel frame shall be 25,4 mm square tubing manufactured in accordance with SANS 657-4, and with baked epoxy or polyester coating finish, manufactured in accordance with SANS 1274.

The steel frame of the demonstration desk legs shall be fitted with acceptable plugs to all open ends.

The demonstration desk top shall be fitted with an acceptable double gas tap.

The demonstration desk shall be fitted with acceptable sink and waste system.

The demonstration desk shall be fitted with an acceptable standard laboratory tap.

The demonstration desk shall be fitted with acceptable hinges (at least two per door).

The demonstration desk shall be fitted with acceptable lock and handle.

The demonstration desk shall be fitted with acceptable screws.

Figure B.20 — Teacher's demonstration desk — *Saligna* *(concluded)*

© SABS

©SABS. Licensed exclusively to Stephen Shole; License ID : M5PQ-XWVG-GETE.
Copying and network storage prohibited.
You can make one paper copy of the standard; No paper copy may be photocopied or reproduced in any way.

Dimensions in millimetres

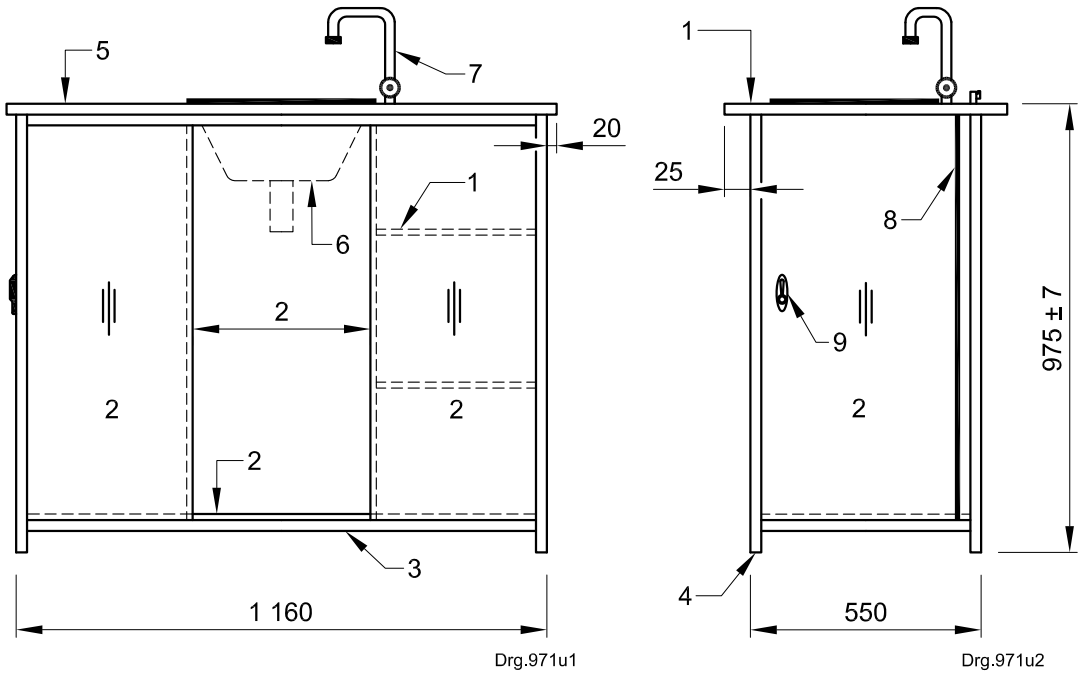

a) Student's workstation front view **b) Student's workstation side view**

Figure B.21 — Student's workstation — *Saligna*

©SABS. Licensed exclusively to Stephen Shole; License ID : M5PQ-XWVG-GETE.
Copying and network storage prohibited.
You can make one paper copy of the standard; No paper copy may be photocopied or reproduced in any way.

Dimensions in millimetres

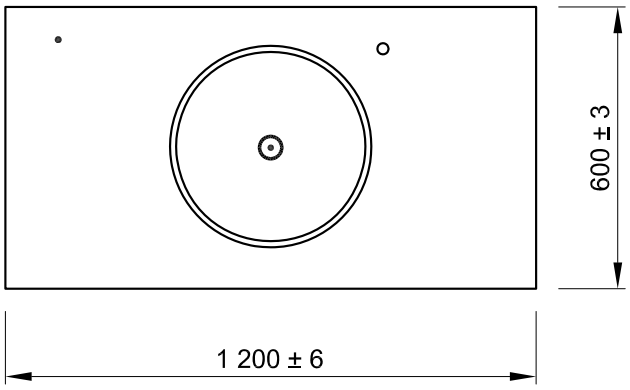

c) Student's workstation top view

Key

1 top
2 doors, divisions, backs, shelves and bottom
3 steel frame
4 plugs
5 gas tap
6 sink and waste system.
7 tap.
8 hinges.
9 lock and handle

The top of a demonstration desk shall be made from 21 mm solid *Saligna* hardwood (*Eucalyptus grandis*), manufactured in accordance with SANS 1460.

The doors, shelves, divisions, backs, and bottom shall be manufactured from matching, veneered, 16 mm thick particle board, manufactured in accordance with SANS 929.

The steel frame shall be 25,4 mm square tubing manufactured in accordance with SANS 657-4, and with baked epoxy or polyester coating finish, manufactured in accordance with SANS 1274.

The steel frame of the demonstration desk legs shall be fitted with acceptable plugs to all open ends.

The demonstration desk top shall be fitted with an acceptable double gas tap.

The demonstration desk shall be fitted with acceptable sink and waste system.

The demonstration desk shall be fitted with an acceptable standard laboratory tap.

The demonstration desk shall be fitted with acceptable hinges (at least two per door).

The demonstration desk shall be fitted with acceptable lock and handle.

The demonstration desk shall be fitted with acceptable screws.

Figure B.21 — Student's workstation — *Saligna* *(concluded)*

© SABS

©SABS. Licensed exclusively to Stephen Shole; License ID : M5PQ-XWVG-GETE.
Copying and network storage prohibited.
You can make one paper copy of the standard; No paper copy may be photocopied or reproduced in any way.

Dimensions in millimetres

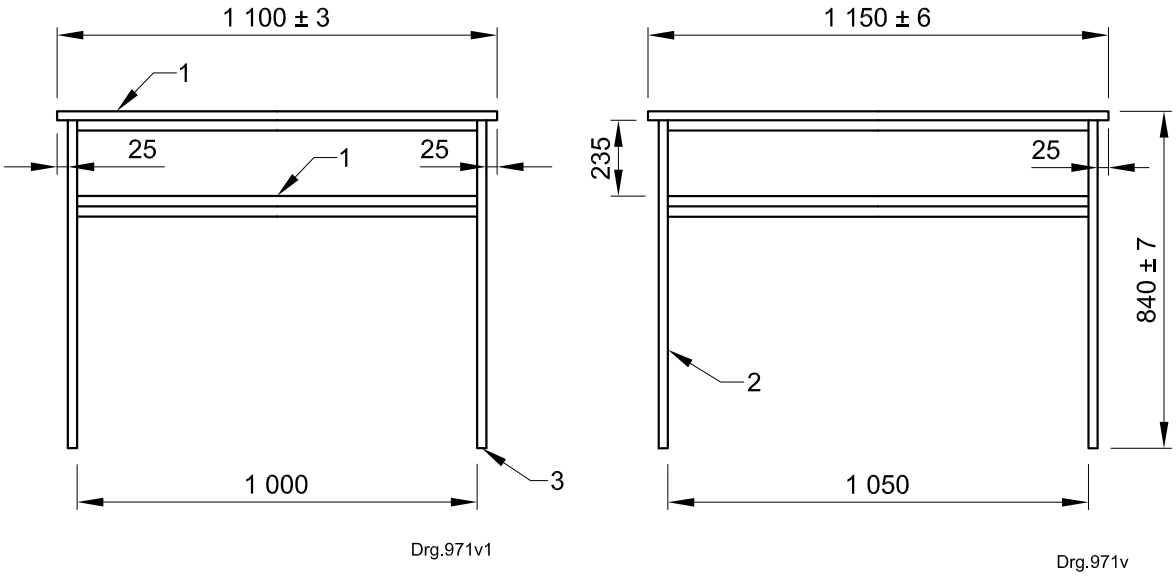

a) Laboratory table front view **b) Laboratory table side view**

Key

1 top and shelf
2 stackable steel frame
3 plugs

The top and shelf shall be made from solid *Saligna* hardwood (*Eucalyptus grandis*), manufactured in accordance with SANS 1460.

The steel frame shall be made from 25,4 mm, square tubing manufactured in accordance with SANS 657-4, and with baked epoxy or polyester coating finish, manufactured in accordance with SANS 1274.

The legs of the laboratory table shall be fitted with acceptable plugs to all legs.

Figure B.22 — Laboratory table

©SABS. Licensed exclusively to Stephen Shole; License ID : M5PQ-XWVG-GETE.
Copying and network storage prohibited.
You can make one paper copy of the standard; No paper copy may be photocopied or reproduced in any way.

Dimensions in millimetres

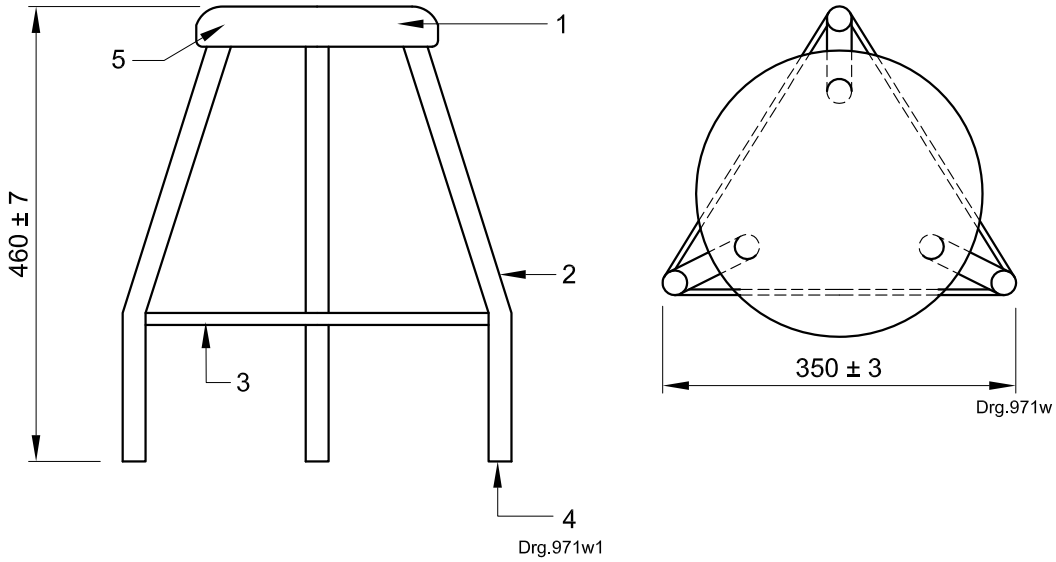

a) Stool front view **b) Stool top view**

Key

1 seat
2 steel frame
3 foot rail.
4 plugs
5 pop rivets.

The seat of the laboratory stool shall be ø 300 mm in size and manufactured from injection moulded copolymer.

The steel frame shall be made from ø 25 mm tubing manufactured in accordance with SANS 657-4, and with baked epoxy or polyester coating finish manufactured in accordance with SANS 1274.

The stool's foot rail shall be manufactured from ø 10 mm mild steel rod.

The legs of the laboratory stool shall be fitted with acceptable plugs to all legs.

The seat shall be secured to steel frame with 4,8 mm × 12 mm standard flange pop rivets.

Figure B.23 — 460 mm Laboratory stool

© SABS

©SABS. Licensed exclusively to Stephen Shole; License ID : M5PQ-XWVG-GETE.
Copying and network storage prohibited.
You can make one paper copy of the standard; No paper copy may be photocopied or reproduced in any way.

Dimensions in millimetres

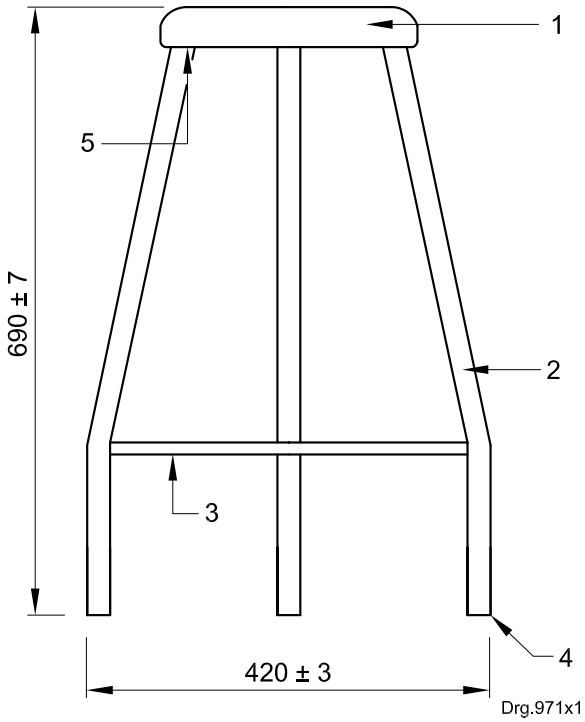

a) Stool front view

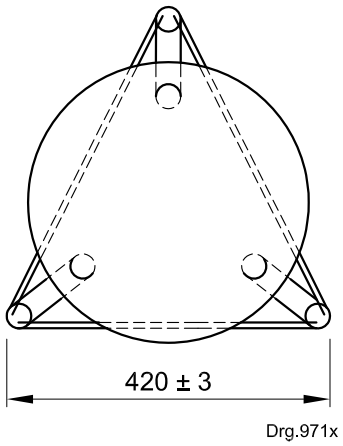

b) Stool top view

Key

1 seat
2 steel frame
3 foot rail
4 plugs
5 pop rivets

The seat of the laboratory stool shall be ø 300 mm in size and manufactured from injection moulded copolymer.

The steel frame shall be made from ø 25 mm tubing manufactured in accordance with SANS 657-4, and with baked epoxy or polyester coating finish manufactured in accordance with SANS 1274.

The stool's foot rail shall be manufactured from ø 10 mm mild steel rod.

The legs of the laboratory stool shall be fitted with acceptable plugs to all legs.

The seat shall be secured to steel frame with 4, 8 mm × 12 mm standard flange pop rivets.

Figure B.24 — 690 mm Laboratory stool

©SABS. Licensed exclusively to Stephen Shole; License ID : M5PQ-XWVG-GETE.
Copying and network storage prohibited.
You can make one paper copy of the standard; No paper copy may be photocopied or reproduced in any way.

Bibliography

SANS 9001/ISO 9001, *Quality management systems – Requirements.*

© SABS