©SABS. Licensed exclusively to Stephen Shole; License ID : GCQZ-0O7J-H04C.
Copying and network storage prohibited.
You can make one paper copy of the standard; No paper copy may be photocopied or reproduced in any way.

ISBN 978-0-626-37160-9

SANS 1528-3:2013

Edition 1.3

SOUTH AFRICAN NATIONAL STANDARD

Furniture

Part 3: Storage units

Published by the South African Bureau of Standards
1 Dr Lategan Road Groenkloof ✉ Private Bag X191 Pretoria 0001
Tel: +27 12 428 7911 Fax: +27 12 344 1568
www.sabs.co.za
© SABS

©SABS. Licensed exclusively to Stephen Shole; License ID : GCQZ-0O7J-H04C.
Copying and network storage prohibited.
You can make one paper copy of the standard; No paper copy may be photocopied or reproduced in any way.

This page has been left blank intentionally

©SABS. Licensed exclusively to Stephen Shole; License ID : GCQZ-0O7J-H04C.
Copying and network storage prohibited.
You can make one paper copy of the standard; No paper copy may be photocopied or reproduced in any way.



COPYRIGHT PROTECTED DOCUMENT

© SABS

In terms of the Standards Act 8 of 2008, the copyright in all South African National Standards or any other publications published by the SABS Standards Division, vests in the SABS. Any use of South African National Standards is limited to use specifically prescribed by the SABS. In the case of a South African National Standard based on an international standard, ownership of the copyright vests in the organization from which the SABS adopted the standard, whether it be under licence or membership agreement. The SABS is obliged to protect such copyright and is authorized to make the relevant international organization aware of any misuse thereof. Unless exemption has been granted, no extract or full text of any South African National Standard may be copied, reproduced, stored in a retrieval system or transmitted in any form or by any means without prior written permission from the SABS Standards Division. This does not preclude the free use, in the course of implementing the standard, of necessary details such as symbols, and size, type or grade designations. If these details are to be used for any purpose other than implementation, prior written permission must be obtained.

Details, advice and limitations of use can be obtained from the Manager: Standards Sales and Information Services. Tel: +27 (0) 12 428 6883 email: sales@sabs.co.za

SABS – Standards Division

The objective of the SABS Standards Division is to develop, promote and maintain South African National Standards. This objective is incorporated in the Standards Act, 2008 (Act No. 8 of 2008).

The SABS continuously strives to improve the quality of its products and services and would therefore be grateful if anyone finding an inaccuracy or ambiguity while using this standard would inform the secretary of the technical committee responsible, the identity of which can be found in the foreword.

Buying Standards

Contact the Sales Office for South African and international standards, which are available in both electronic and hard copy format. Tel: +27 (0) 12 428 6883 email: sales@sabs.co.za

South African National Standards are also available online from the SABS Webstore www.store.sabs.co.za

Information on Standards

SABS Customer Services provide comprehensive standards-related information on national, regional and international standards. Tel: +27 (0) 12 428 7911 / 0861 27 7227 email: info@sabs.co.za

©SABS. Licensed exclusively to Stephen Shole; License ID : GCQZ-0O7J-H04C.
Copying and network storage prohibited.
You can make one paper copy of the standard; No paper copy may be photocopied or reproduced in any way.

SANS 1528-3:2013
Edition 1.3

Table of changes

Change No.	Date	Scope
Amdt 1	1996	Amended to add a new reference, new definitions, a note to the subclause that deals with materials, and additional requirements for glass used in the construction of units.
Amdt 2	2009	Amended to change the designation of SABS standards to SANS standards, to update the definition of "acceptable", to update referenced standards, and to delete a performance requirement.
Amdt 3	2013	Amended to include reference to a national department in the foreword, to update referenced standards, to add requirements for the dimensions of storage units and to correct numbering accordingly, to move the bibliography out of annex C to the end of the document and to correct cross-references accordingly, and to rename annex C as "Dimensions of storage units".

Foreword

This South African standard was prepared by National Committee SABS TC 136, *Furniture*, in accordance with procedures of the South African Bureau of Standards, in compliance with annex 3 of the WTO/TBT agreement.

This document was published in March 2013.

This document supersedes SANS 1528-3:2009 (edition 1.2).

A vertical line in the margin shows where the text has been technically modified by amendment No. 3.

Reference is made in annex C to the "relevant national department". In South Africa, this means the Forestry Stewardship Council. **Amdt 3**

SANS 1528 consists of the following parts, under the general title *Furniture*:

Part 1: *Seating.*

Part 2: *Desks, tables and computer stands.*

Part 3: *Storage units.*

Part 4: *Bunk beds for domestic use.*

Part 6: *High chairs for domestic use.*

Part 7: *Children's cots for domestic use.*

Annex C forms an integral part of this document. Annexes A and B are for information only. **Amdt 3**

Compliance with this document cannot confer immunity from legal obligations.

Reaffirmed and reprinted in January 2019.
This document will be reviewed every five years and be reaffirmed, amended, revised or withdrawn.

© SABS

©SABS. Licensed exclusively to Stephen Shole; License ID : GCQZ-0O7J-H04C.
Copying and network storage prohibited.
You can make one paper copy of the standard; No paper copy may be photocopied or reproduced in any way.

Contents

Page

Foreword

1 Scope 3

2 Normative references 3

3 Definitions 4

4 Requirements 4

5 Marking 8

6 Inspection and methods of test 9

6.1 Inspection 9
6.2 Preparation of storage unit to be tested 9
6.3 Tests for stability 9
6.4 Tests for strength and durability 12

6.4.1 Apparatus 12
6.4.2 Tests for shelves 13
6.4.3 Test for clothes rails 14
6.4.4 Test for tops and bottoms 15
6.4.5 Tests for pivoted doors 15
6.4.6 Tests for sliding doors and horizontal roll fronts 17
6.4.7 Tests for flaps and lids 18
6.4.8 Tests for vertical roll fronts 20
6.4.9 Test for drawers 20
6.4.10 Test for strength of structure and underframe 24
6.4.11 Test for strength of wall attachment 24
6.4.12 Impact test on postformed edges 26

Annex A (informative) Notes to purchasers 28

Annex B (informative) Quality verification of storage units 29

Annex C (normative) Dimensions of storage units…… ..... 30 |
Amdt 3

Bibliography ..... 56 |
Amdt 3

©SABS. Licensed exclusively to Stephen Shole; License ID : GCQZ-0O7J-H04C.
Copying and network storage prohibited.
You can make one paper copy of the standard; No paper copy may be photocopied or reproduced in any way.

This page is intentionally left blank

©SABS. Licensed exclusively to Stephen Shole; License ID : GCQZ-0O7J-H04C.
Copying and network storage prohibited.
You can make one paper copy of the standard; No paper copy may be photocopied or reproduced in any way.

Furniture

Part 3:
Storage units

1 Scope

This part of SANS 1528 specifies the characteristics of storage units for use in domestic and office situations. It covers such items as sheet steel furniture, kitchen units, shelving, credenzas and chests of drawers. It does not cover such items as industrial racking and shelving.

NOTE It is recommended that cognizance be taken of foreign standards when export of furniture is to be considered.

2 Normative references

The following standards contain provisions which, through reference in this text, constitute provisions of this part of SANS 1528. All standards are subject to revision and, since any reference to a standard is deemed to be a reference to the latest edition of that standard, parties to agreements based on this part of SANS 1528 are encouraged to take steps to ensure the use of the most recent editions of the standards indicated below. Information on currently valid national and international standards can be obtained from the South African Bureau of Standards.

~~BS 6250-3, *Domestic and contract furniture – Part 3: Specification for performance requirements for cabinet furniture*~~. **Amdt 2**

SANS 540-1, *Fibreboard products – Part 1: Uncoated fibreboard.* **Amdt 3**

SANS 929, *Plywood and composite board.* **Amdt 3**

SANS 951, *Fire-resistant record protection equipment*.

SANS 1236, *Silvered glass mirrors for general use*.

SANS 1263-1, *Safety and security glazing materials for buildings – Part 1: Safety performance of glazing materials under human impact*. **Amdt 1**

SANS 1274, *Coatings applied by the powder-coating process.* **Amdt 3**

SANS 1460, *Laminated timber (glulam).* **Amdt 3**

©SABS. Licensed exclusively to Stephen Shole; License ID : GCQZ-0O7J-H04C.
Copying and network storage prohibited.
You can make one paper copy of the standard; No paper copy may be photocopied or reproduced in any way.

3 Definitions

For the purposes of this part of SANS 1528, the following definitions apply:

3.1
acceptable
acceptable to the authority administering this standard, or to the parties concluding the purchase contract, as relevant **Amdt 2**

3.2
annealed glass
glass that has been heated at the annealing temperature (to remove internal stresses) and cooled under controlled conditions **Amdt 1**

3.3
catching device
device that holds a part of a storage unit (such as a door, flap or lid) in the closed or open position but that can be released by hand pressure without the use of a key

3.4
laminated glass
two or more layers of glass permanently bonded together by one or more interlayers of plastics material **Amdt 1**

3.5
toughened glass
single layer of glass that has been subjected to special treatment to increase its mechanical strength and to ensure fragmentation when broken **Amdt 1**

4 Requirements

4.1 Materials

4.1.1 General **Amdt 3**

The following materials used in the construction of a storage unit shall comply with relevant requirements of applicable national standards (See also bibliography.): **Amdt 3**

– timber and timber derivatives;

– metal;

– paint;

– powder coatings, as for type 3;

– varnish;

– nickel/chromium coatings;

– high-pressure and low-pressure decorative laminates.

NOTE Requirements for storage units that include glass in their construction are given in 4.8. **Amdt 1**

If there is no applicable national standard, the standard or specification with which the material complies shall be such as to be acceptable.

©SABS. Licensed exclusively to Stephen Shole; License ID : GCQZ-0O7J-H04C.
Copying and network storage prohibited.
You can make one paper copy of the standard; No paper copy may be photocopied or reproduced in any way.

4.1.2 Dimensions

The dimensions of storage units shall be in accordance with annex C. **Amdt 3**

4.2 Hazards

A storage unit shall be so constructed that

a) movable and adjustable parts cannot cause injuries and cannot be unintentionally removed,

b) there are no holes or openings such as open-ended tubes or crevices or loose washers in which fingers or flesh could become trapped or injured,

c) all corners, edges and projecting parts are sufficiently smooth not to be capable of causing a wound or an abrasion or damage to clothing,

d) any lubricated parts are so protected that the clothing of a user of the storage unit cannot come into contact with the lubricant, and

e) it can pass through a single doorway of rebate width 813 mm and, during such transportation, cannot create a hazard.

4.3 Surface finish

4.3.1 Appearance

All surfaces shall be free of warp. The appearance of all surface finishes shall be such as to be acceptable.

4.3.2 Performance

4.3.2.1 Deleted by amendment No. 2.

4.3.2.2 When the surface finish of a postformed edge is tested in accordance with 6.4.12, it shall achieve the following ratings at each test point:

– masspiece dropping through a distance of 100 mm: rating 3;

– masspiece dropping through a distance of 50 mm: rating 5.

4.3.2.3 All edges and surfaces of kitchen units shall be sealed against moisture absorption.

4.4 Stability

4.4.1 When a storage unit is standing on a level concrete floor and hand pressure is applied to any part of the unit, the storage unit shall not rock.

4.4.2 If a storage unit has levelling devices, each device shall be adjustable over a range of at least 25 mm.

4.4.3 When a storage unit is tested in accordance with 6.3, it shall not overbalance.

©SABS. Licensed exclusively to Stephen Shole; License ID : GCQZ-0O7J-H04C.
Copying and network storage prohibited.
You can make one paper copy of the standard; No paper copy may be photocopied or reproduced in any way.

4.5 Strength and durability

When a storage unit is tested in accordance with 6.4, there shall be

a) no fracture or cracking of any member, component or joint,

b) no loosening of joints intended to be rigid,

c) no free movement of any components that exceeds the free movement noted in the initial inspection (see 6.2.2),

d) no deformation or wear of any part or component that will significantly affect the unit's function,

e) no clearly audible noise developed during testing,

f) no deterioration of the operation of any movable or adjustable parts,

g) no permanent deflection of any part that exceeds

- span/250 (for particle board),
- span/150 (for timber), or
- span/100 (for other materials), and

h) no sign of the pulling away of wall-mounted units from the surface to which they are fixed.

4.6 Dimensions

4.6.1 Kitchen worksurfaces

The height of a kitchen worksurface should be 900 mm.

4.6.2 Drawers

The minimum dimensions of drawers should be as given in table 1.

Table 1 — Minimum dimensions of drawers

1	2	3	4
Type of storage	**Minimum internal dimensions of usable space** mm		
	Length	**Width**	**Height**
Horizontal storage	420	330	120
Suspended filing	420	330	270
Other types	–	330	–

4.7 Electrical fittings

Luminaires and switches used in storage units shall comply with the requirements of an applicable national standard. After a storage unit has been tested in accordance with 6.4.5.1, the luminaires and switches shall continue to operate. When a luminaire or any other electrical fitting incorporated in a storage unit operates continuously for 24 h, there shall be no damage such as blistering of the surface finish near the luminaire.

© SABS

©SABS. Licensed exclusively to Stephen Shole; License ID : GCQZ-0O7J-H04C.
Copying and network storage prohibited.
You can make one paper copy of the standard; No paper copy may be photocopied or reproduced in any way.

4.8 Additional requirements for storage units that include glass in their construction

4.8.1 Edges

All edges of glass shall be smooth. The edges of laminated or film-backed glass shall be protected from moisture.

4.8.2 Contact

There shall be no metal-to-glass or glass-to-glass contact.

4.8.3 Glass fitted in rebates or grooves

The depth of a rebate or groove shall be such that the glass is overlapped by a distance at least equal to the thickness of the glass but by at least 4 mm.

4.8.4 Support of glass shelves

4.8.4.1 Each support of a glass shelf shall be of area at least 36 mm^2.

4.8.4.2 The supports shall be so arranged that, when a shelf is slid as far as possible in a direction other than the one(s) in which the shelf can be removed from the storage unit, the shelf still overlaps each of its supports by at least 6 mm.

4.8.4.3 When a storage unit is tilted through an angle of 30° ± 2° in any direction, glass shelves shall not slide off their supports and shall not rely on closed doors to keep them in position.

4.8.5 Mirrors

Mirrors shall comply with the requirements of SANS 1236.

4.8.6 Horizontal glass supported over its entire area **Amdt 1**

Glass that is supported over its entire area shall be of the relevant nominal thickness given in table A. **Amdt 1**

Table A — Nominal thickness of glass that is supported over its entire area

1	2	3	4	5
Area of glass m^2	**Nominal thickness** mm			
	Annealed glass	**Toughened glass**	**Laminated glass**	**Film-backed glass**
≤ 0,5	≥ 4,0	≥ 4,0	≥ 4,0	≥ 4,0
> 0,5 to ≤ 1,0	≥ 5,0	≥ 4,0	≥ 4,0	≥ 4,0
> 1,0 to ≤ 1,5	≥ 6,0	≥ 4,0	≥ 4,0	≥ 4,0
> 1,5	*	≥ 4,0	≥ 4,0	*
* Not applicable.				

Amdt 1

©SABS. Licensed exclusively to Stephen Shole; License ID : GCQZ-0O7J-H04C.
Copying and network storage prohibited.
You can make one paper copy of the standard; No paper copy may be photocopied or reproduced in any way.

4.8.7 External glass surfaces other than horizontal glass supported over its entire area

Amdt 1

4.8.7.1 Unbacked glass of major dimension less than 900 mm shall comply with the relevant requirements of SANS 1263-1. The area of fully framed unbacked glass shall not exceed the following:

Thickness of glass mm	Maximum area m^2
3	0,5
4	2,0
5	3,0
6	4,0

When partially framed or when unframed, the glass shall be of nominal thickness at least 4 mm.

Amdt 1

4.8.7.2 Unbacked glass of major dimension 900 mm or greater shall comply with the relevant requirements of SANS 1263-1. When fully framed, the glass shall be of nominal thickness at least 4 mm; when partially framed or when unframed, the glass shall be of nominal thickness at least 6 mm.

Amdt 1

4.9 Ironmongery

When a storage unit is standing on a level concrete floor, catching and locking devices (including latch rods for stationery cupboards) shall operate smoothly. It shall not be necessary to deform parts of the storage unit to operate the devices even after completion of the tests given in this part of SANS 1528.

4.10 Fire resistance

Storage units that are intended to protect their contents against fire shall comply with the fire-resistance requirements of SANS 951.

5 Marking

5.1 Adhesive label

Each storage unit shall bear the following information on a durable and legible adhesive label stuck to the back of the storage unit or to the inside of a door:

a) the manufacturer's name, trade name or trade mark;

b) the model identification number; and

c) the batch identification number.

5.2 Data sheet

Each storage unit shall have an accompanying data sheet. The information on the sheet shall be printed in the largest typeface practicable and expressed as simply as possible. The following information shall be given:

a) the manufacturer's name, trade name or trade mark;

©SABS. Licensed exclusively to Stephen Shole; License ID : GCQZ-0O7J-H04C.
Copying and network storage prohibited.
You can make one paper copy of the standard; No paper copy may be photocopied or reproduced in any way.

b) the model identification and the batch identification;

c) a list of the materials used in the manufacture of the storage unit that comply with the requirements of national standards, together with a list of the relevant national standards (See also (d) below.);

d) a separate list of the materials (type and make) used in the manufacture of the storage unit that do not comply with the requirements of national standards, together with the full identification of the standard or specification with which they do comply;

e) if the storage unit is to be assembled or installed by the purchaser, full instructions (including diagrams) indicating exactly how the storage unit is to be assembled or installed; and

f) if the storage unit has adjustable shelves, instructions on how to adjust them.

5.3 Care and maintenance

The following information (which may be given on an adhesive label or on the data sheet or on a separate information sheet) should be provided to allow the end user to keep the storage unit in a clean and serviceable condition:

a) if the use of certain cleaning materials could cause permanent damage to the storage unit, a warning to this effect, and the action to be taken to avoid this possibility (for example, a warning that washing powders or other substances containing abrasives can scratch glass);

b) the recommended method of cleaning exposed surfaces;

c) the correct methods to be used for major cleaning operations; and

d) any recommended maintenance procedures.

6 Inspection and methods of test

6.1 Inspection

Visually examine each storage unit for compliance with the requirements of this part of SANS 1528 for which tests to assess compliance are not given in 6.3 or 6.4.

6.2 Preparation of storage unit to be tested

NOTE Since adhesives need time to achieve their full strength, do not test a storage unit immediately after manufacture.

6.2.1 If relevant, assemble or install any storage unit in accordance with the manufacturer's instructions. If the storage unit can be assembled in more than one way, assemble it in the most adverse way for testing (See 5.2(e).).

6.2.2 Before testing, carefully inspect the storage unit so that, after testing, compliance with the requirements of 4.5 can be assessed.

6.2.3 Unless otherwise stated, use the loads given in table 2 to load all parts of the storage unit that can be used for storage purposes (other than the part under test).

6.3 Tests for stability

NOTE The tests for stability are not carried out on storage units that are intended to be connected to the structure of a building.

©SABS. Licensed exclusively to Stephen Shole; License ID : GCQZ-0O7J-H04C.
Copying and network storage prohibited.
You can make one paper copy of the standard; No paper copy may be photocopied or reproduced in any way.

6.3.1 Apparatus

6.3.1.1 Means of applying vertical forces of 100 N, 200 N and 300 N to the loading pad (see 6.3.1.3).

6.3.1.2 Means of applying a horizontal force of 200 N to the loading pad.

6.3.1.3 Loading pad of size 75 mm × 75 mm, of hard smooth material and that has rounded edges.

6.3.1.4 Stops designed to prevent the storage unit under test from sliding but not from tilting. The height of the stops is the lowest that can be used to prevent sliding.

Table 2 — Test loads

1	2
Part to be loaded	**Load to be applied**
Horizontal surfaces, shelves and door baskets	1,0 kg per dm^2 in plan
Drawers and extending elements	0,25 kg per dm^3 of internal volume
Suspended filing-pocket fittings	1,25 kg per dm of length
Clothes rails	2,0 kg per dm of length

6.3.2 Procedure for unloaded storage units

6.3.2.1 If the storage unit has levelling devices, so adjust them that they are in approximately the mid-range of adjustment and the storage unit does not rock, and check for compliance with 4.4.1 and 4.4.2.

6.3.2.2 So position the unloaded storage unit that its longest side is against the stops (see 6.3.1.4).

6.3.2.3 Open all doors through 90° (or as far as they will go, if less than 90°). Pull out all drawers as far as possible. If the drawers have built-in stops, so pull out the drawers that the lesser of one-third of their length or 100 mm remains in the carcass of the storage unit. Pull out all extending elements as far as possible.

6.3.2.4 Check for compliance with 4.4.3.

6.3.2.5 Close all the doors and drawers.

6.3.2.6 Open each part of the storage unit, in turn, to the position described in 6.3.2.3.

6.3.2.7 Using the loading pad, apply a vertical force of 100 N to each of the parts in turn, as follows:

– **on doors**: 50 mm from the outer edge (see figure 1);

– **on drawers**: over the centre of the front of the drawer (see figure 2); and

– **on flaps, leaves and shelves**: over the centre and 50 mm from the outer edge (see figure 3).

6.3.2.8 Check for compliance with 4.4.3.

6.3.2.9 Repeat 6.3.2.6 to 6.3.2.8 on each door, drawer or extending element of a storage unit.

©SABS. Licensed exclusively to Stephen Shole; License ID : GCQZ-0O7J-H04C.
Copying and network storage prohibited.
You can make one paper copy of the standard; No paper copy may be photocopied or reproduced in any way.

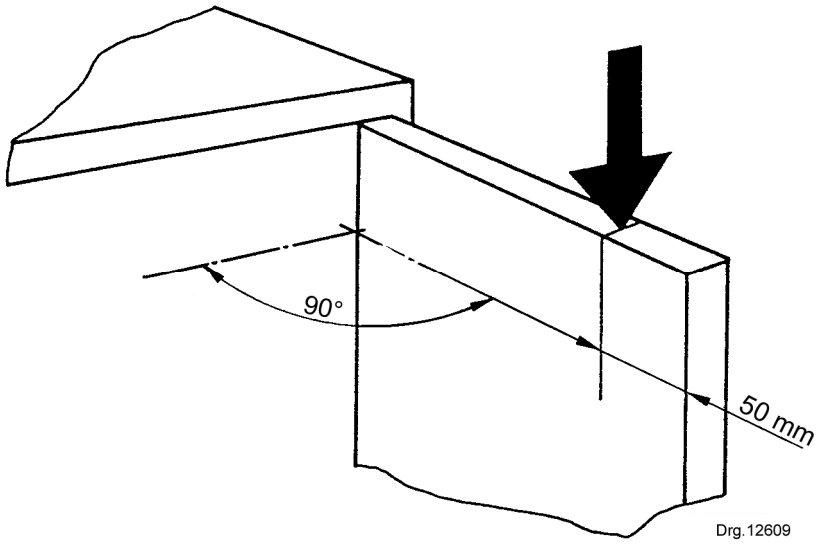

Figure 1 — Vertical force on door

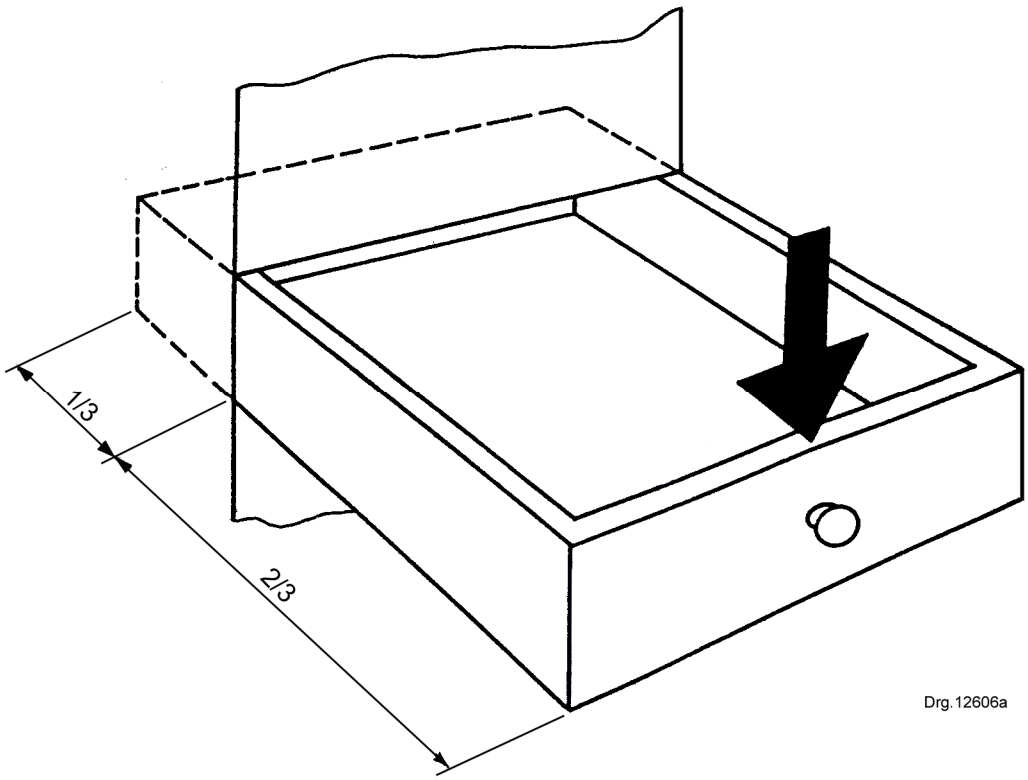

Figure 2 — Vertical force on drawer

©SABS. Licensed exclusively to Stephen Shole; License ID : GCQZ-0O7J-H04C.
Copying and network storage prohibited.
You can make one paper copy of the standard; No paper copy may be photocopied or reproduced in any way.

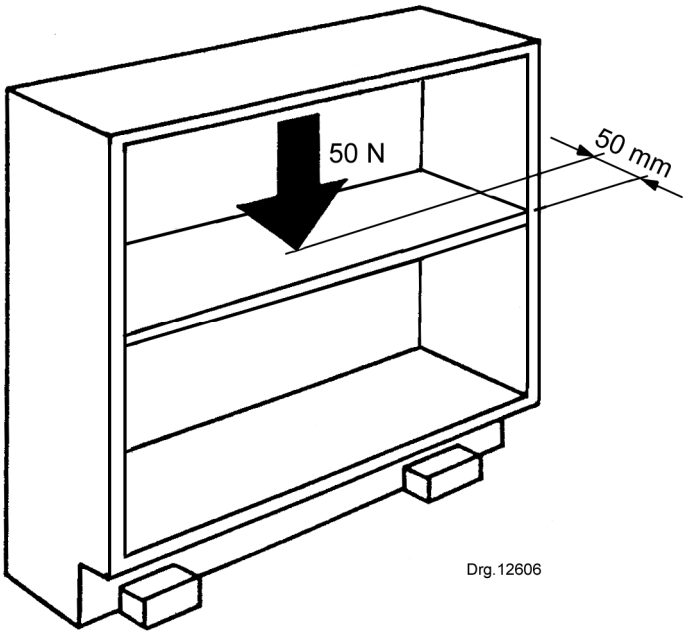

Figure 3 — Vertical force on shelf

6.3.3 Procedure for loaded storage units

6.3.3.1 Load the storage unit (see 6.2.3).

6.3.3.2 Repeat 6.3.2.5 to 6.3.2.9 but apply a vertical force of 300 N to doors and drawers and a vertical force of 200 N to extending elements.

6.3.3.3 Apply a horizontal pushing force of 200 N perpendicular to the front edge of the storage unit at its highest point, but not higher than 1,6 m, and check for compliance with 4.4.3.

6.3.3.4 Apply a horizontal pulling force of 200 N to each handle of a locked part of the storage unit and check for compliance with 4.4.3.

6.4 Tests for strength and durability

6.4.1 Apparatus

6.4.1.1 Means of loading the storage unit with the loads given in 6.4.2 to 6.4.12. The means of loading does not reinforce the structure of the storage unit and does not redistribute the loads. If the loads consist of bags filled with, for example, lead shot, the bags shall be so divided into small compartments as to prevent the load from shifting during the test. Suspended filing-pockets shall be loaded using files filled with bond paper.

6.4.1.2 Steel impact plate of approximate size 109 mm × 10 mm × 200 mm and of mass 1,7 kg.

6.4.1.3 Two loading pads of size 75 mm × 75 mm, of hard smooth material and that have rounded edges.

6.4.1.4 Stops designed to prevent the storage unit under test from sliding but not from tilting. The height of the stops is the lowest that can be used to prevent sliding.

©SABS. Licensed exclusively to Stephen Shole; License ID : GCQZ-0O7J-H04C.
Copying and network storage prohibited.
You can make one paper copy of the standard; No paper copy may be photocopied or reproduced in any way.

6.4.2 Tests for shelves

6.4.2.1 Deflection of shelves

6.4.2.1.1 If the number of shelves in the storage unit can be varied, divide the height of the unit (expressed in millimetres) by 200, and round off the result to the lower integer. This integer minus one is the number of shelves to be fitted during the test.

6.4.2.1.2 Load the shelf under test with a uniformly distributed load of 2,0 kg/dm^2 of shelf area (see figure 4).

6.4.2.1.3 Measure the deflection (from a straight line) of the front edge of the shelf and leave the shelf loaded.

6.4.2.1.4 After one week, repeat 6.4.2.1.3 and calculate the deflection of the shelf due to the loading.

6.4.2.1.5 Check for compliance with 4.5.

6.4.2.2 Strength of shelf supports (other than glass shelves)

6.4.2.2.1 With the storage unit loaded as in 6.4.2.1, remove the loads within a distance of approximately 220 mm from one shelf support and replace them with the steel impact plate (see 6.4.1.2 and figure 5).

6.4.2.2.2 Inspect the shelf and measure its position in relation to a fixed point.

6.4.2.2.3 Tip the steel impact plate over, onto the shelf, 10 times.

6.4.2.2.4 Again inspect the shelf and measure its position.

6.4.2.2.5 Check for compliance with 4.5.

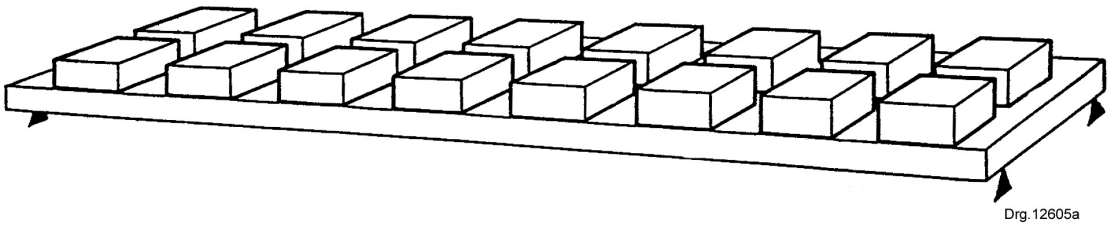

Figure 4 — Deflection of shelves

©SABS. Licensed exclusively to Stephen Shole; License ID : GCQZ-0O7J-H04C.
Copying and network storage prohibited.
You can make one paper copy of the standard; No paper copy may be photocopied or reproduced in any way.

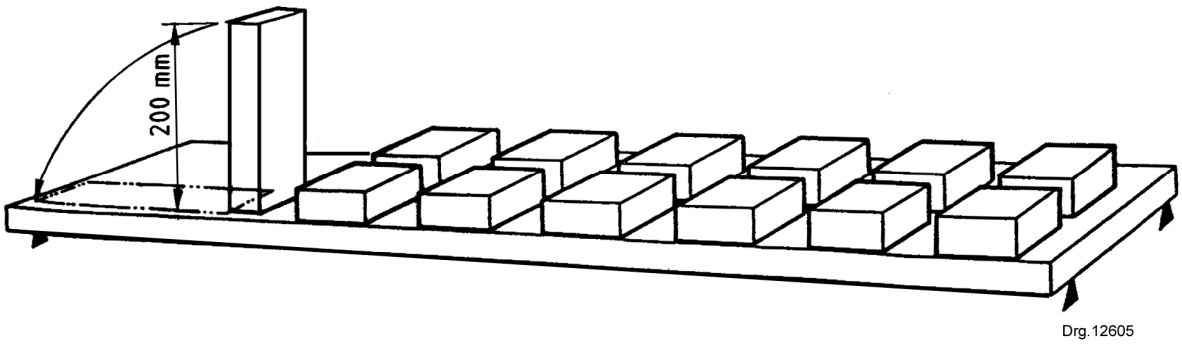

Figure 5 — Strength of shelf supports

6.4.3 Test for clothes rails

6.4.3.1 Deflection of clothes rail

6.4.3.1.1 Load the clothes rail under test with a uniformly distributed load of 4,0 kg/dm of length (see figure 6).

6.4.3.1.2 Measure the deflection (from a straight line) of the centre of the span of the clothes rail and leave the clothes rail loaded.

6.4.3.1.3 After one week, repeat 6.4.3.1.2 and calculate the deflection of the clothes rail due to the loading.

6.4.3.1.4 Check for compliance with 4.5.

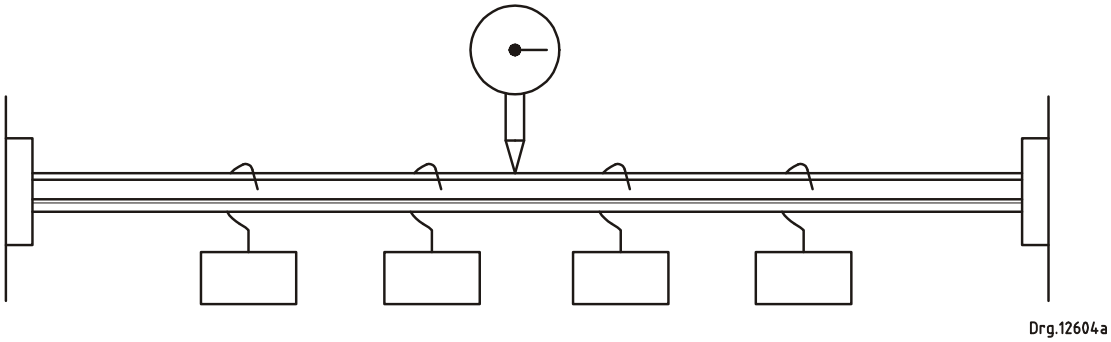

Figure 6 — Deflection of clothes rail

6.4.3.2 Strength of clothes rail supports and coat-hooks

6.4.3.2.1 Load the clothes rail under test with a load equal to 4,0 kg/dm of length of the clothes rail but concentrated next to the weakest support of the rail (see figure 7(a)). If the clothes rail has two or more spans, load each span (see figure 7(b)). Load the coat-hook under test with a load of 4,0 kg. Measure, in relation to a fixed point, the position of the clothes rail or coat-hook at the support.

6.4.3.2.2 After 1 h, again measure the position of the clothes rail or coat-hook at the support.

6.4.3.2.3 Check for compliance with 4.5.

©SABS. Licensed exclusively to Stephen Shole; License ID : GCQZ-0O7J-H04C.
Copying and network storage prohibited.
You can make one paper copy of the standard; No paper copy may be photocopied or reproduced in any way.

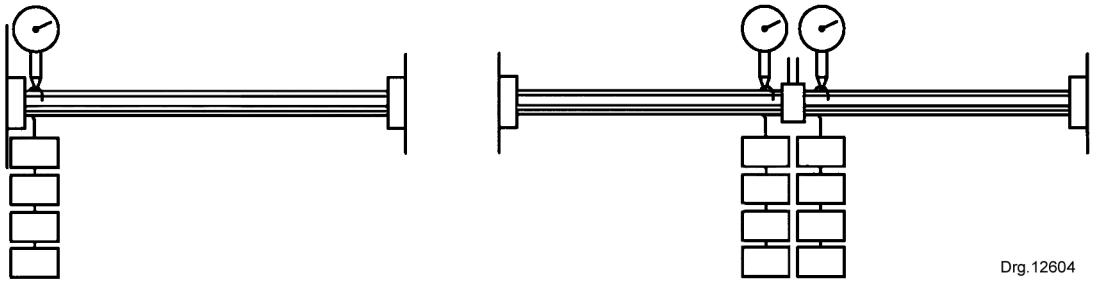

a) Two supports **b) Three or more supports**

Figure 7 — Strength of clothes rail supports

6.4.4 Test for tops and bottoms

6.4.4.1 Using the loading pad, apply the appropriate of the loads given in table 3 to any potentially weak position on the part under test. Apply the load slowly to avoid dynamic loading, and maintain the load for 10 s.

6.4.4.2 Apply the load 10 times.

6.4.4.3 Check for compliance with 4.5.

Table 3 — Test loads for tops and bottoms of storage units

1	2
Part to be loaded	**Load to be applied** N
Top surface less than 1 050 mm above floor	1 000
Top surface at least 1 050 mm above floor	350
Bottom surface of wall units	1 000
Floor units with unrestricted headroom	1 000
Floor units with headroom less than 1 050 mm	450

6.4.5 Tests for pivoted doors

6.4.5.1 Durability of pivoted door

6.4.5.1.1 Attach a mass of 3 kg to the inside of the door at its vertical centre-line (see figure 8).

6.4.5.1.2 Open and close the door gently through 80 000 cycles, each cycle consisting of

– over a period of 3 s, opening the door through the lesser of 130° or until 10° from the fully open position. If opening a door is intended to switch on a luminaire in the storage unit, allow the luminaire to operate during the test, and

– over a period of 3 s, closing the door and operating any catching device (see 3.3).

©SABS. Licensed exclusively to Stephen Shole; License ID : GCQZ-0O7J-H04C.
Copying and network storage prohibited.
You can make one paper copy of the standard; No paper copy may be photocopied or reproduced in any way.

6.4.5.1.3 Check for compliance with 4.5 and, when relevant, 4.7, before and after each test.

6.4.5.1.4 Repeat the test on each pivoted door of the storage unit.

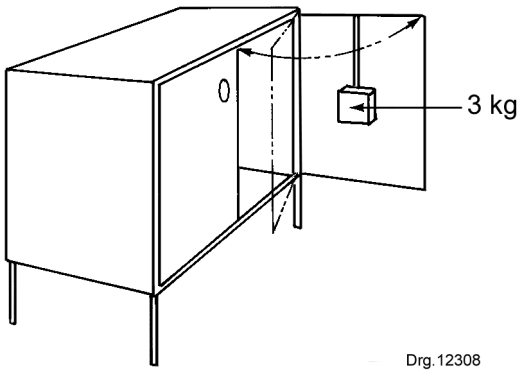

Figure 8 — Durability of pivoted door

6.4.5.2 Strength of pivoted door

6.4.5.2.1 Attach a mass of 35 kg to the door under test in such a way that its centre of gravity coincides with the plane of the door and is 100 mm from the handle edge of the door (see figure 9).

6.4.5.2.2 Measure the deflection of the door from a fixed position.

6.4.5.2.3 Open and close the door 10 times, each operation taking between 3 s and 5 s.

6.4.5.2.4 Repeat 6.4.5.2.2 and check for compliance with 4.5.

6.4.5.2.5 Remove the load from the door and again check for compliance with 4.5.

6.4.5.2.6 Repeat the test on each pivoted door of the storage unit.

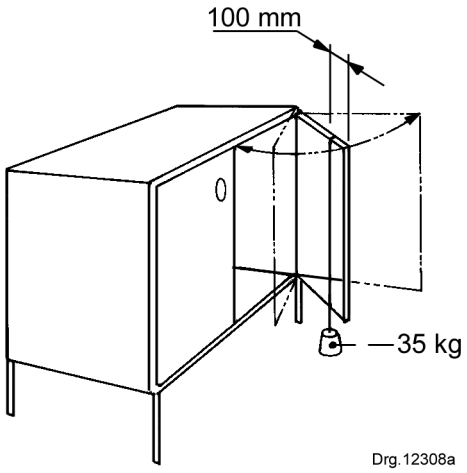

Figure 9 — Strength of pivoted door

©SABS. Licensed exclusively to Stephen Shole; License ID : GCQZ-0O7J-H04C.
Copying and network storage prohibited.
You can make one paper copy of the standard; No paper copy may be photocopied or reproduced in any way.

6.4.5.3 Slamming of pivoted door

6.4.5.3.1 Fully open the door under test without straining any built-in stops, and note its position.

6.4.5.3.2 Attach one end of a cord to the door handle; if the door does not have a handle, attach the cord to the middle of the handle edge of the door (see figure 10).

6.4.5.3.3 Pass the cord over a pulley such that when the door is fully open, the cord is at right angles to the plane of the door.

6.4.5.3.4 Attach a 2,0 kg masspiece to the other end of the cord such that the handle edge of the door can move approximately 10 mm from the fully open position (see 6.4.5.3.1) towards the closed position before the masspiece is lifted off the floor.

6.4.5.3.5 Move the door (so that the masspiece is raised) through 30° (see 6.4.5.3.1) towards its closed position.

6.4.5.3.6 Release the door.

6.4.5.3.7 Repeat 6.4.5.3.5 and 6.4.5.3.6 a further nine times and check for compliance with 4.5.

6.4.5.3.8 Repeat the test on each pivoted door of the storage unit.

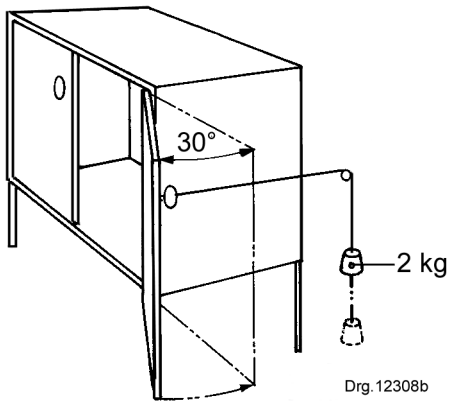

Figure 10 — Slamming of pivoted door

6.4.6 Tests for sliding doors and horizontal roll fronts

6.4.6.1 Durability of sliding doors and horizontal roll fronts

6.4.6.1.1 Apply appropriate forces to the handle of the door (or as near to the handle as possible) to open and close the door through 40 000 cycles, each cycle consisting of

– over a period of 3 s, opening the door to within 50 mm of its fully open position, and

– over a period of 3 s, closing the door and operating any catching device.

6.4.6.1.2 Check for compliance with 4.5.

6.4.6.1.3 Repeat the tests on each sliding door and horizontal roll front of the storage unit.

©SABS. Licensed exclusively to Stephen Shole; License ID : GCQZ-0O7J-H04C.
Copying and network storage prohibited.
You can make one paper copy of the standard; No paper copy may be photocopied or reproduced in any way.

6.4.6.2 Slamming of sliding doors and horizontal roll fronts

6.4.6.2.1 Attach one end of a cord to the door handle or as near to the handle as possible (see figure 11).

6.4.6.2.2 Pass the cord over a pulley such that the cord runs horizontally and parallel to the plane of the door.

6.4.6.2.3 Attach a 4,0 kg masspiece to the other end of the cord such that the door can be opened approximately 10 mm before the masspiece is lifted off the floor.

6.4.6.2.4 Open the door by 300 mm.

6.4.6.2.5 Release the door.

6.4.6.2.6 Repeat 6.4.6.2.4 and 6.4.6.2.5 a further nine times and check for compliance with 4.5.

6.4.6.2.7 Repeat the test on each sliding door and horizontal roll front of the storage unit.

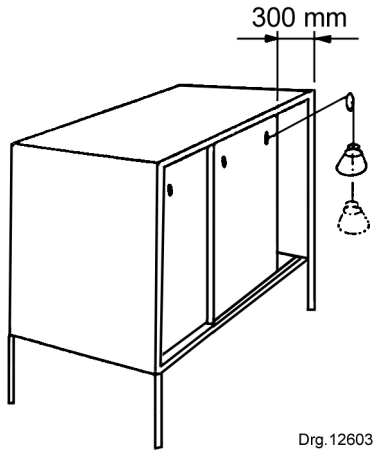

Figure 11 — Slamming of sliding door and horizontal roll front

6.4.7 Tests for flaps and lids

6.4.7.1 Durability of flaps and lids

6.4.7.1.1 Gently open and close the flap or lid through 20 000 cycles, each cycle consisting of

– over a period of 3 s, fully opening the flap or lid, and

– over a period of 3 s, closing the flap or lid and operating any catching device.

6.4.7.1.2 Check for compliance with 4.5.

6.4.7.1.3 Repeat the test on each flap or lid of the storage unit.

©SABS. Licensed exclusively to Stephen Shole; License ID : GCQZ-0O7J-H04C.
Copying and network storage prohibited.
You can make one paper copy of the standard; No paper copy may be photocopied or reproduced in any way.

6.4.7.2 Strength of flap

6.4.7.2.1 Fully open the flap.

6.4.7.2.2 At a position 50 mm from the edge of the flap (see figure 12), apply a load of 300 N. Apply the load slowly to avoid dynamic loading, and maintain the load for 10 s.

6.4.7.2.3 While the load is being applied, measure the deflection of the flap from a fixed position.

6.4.7.2.4 Repeat 6.4.7.2.2 a further nine times and, while the load is being applied for the last time, repeat 6.4.7.2.3.

6.4.7.2.5 Check for compliance with 4.5.

6.4.7.2.6 Repeat the test on each flap of the storage unit.

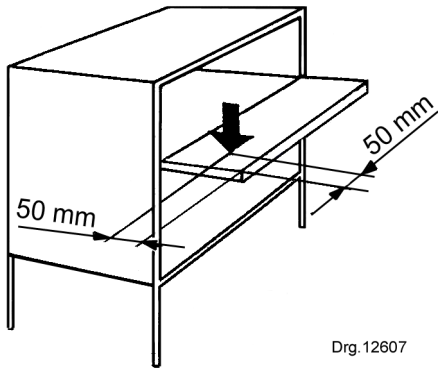

Figure 12 — Strength of flap

6.4.7.3 Slamming of lids

6.4.7.3.1 If the lid has a catching device to hold it in the open position, open the lid to the position where the catching device engages.

6.4.7.3.2 If the lid does not have a catching device to hold it in the open position, open it through 90°.

6.4.7.3.3 Allow the lid to slam closed (under the action of gravity) 10 times.

6.4.7.3.4 Check for compliance with 4.5.

6.4.7.3.5 If the lid does not have a catching device to hold it in the open position, allow it to fall (under the action of gravity) past the position described in 6.4.7.3.2, 10 times.

6.4.7.3.6 Check for compliance with 4.5.

©SABS. Licensed exclusively to Stephen Shole; License ID : GCQZ-0O7J-H04C.
Copying and network storage prohibited.
You can make one paper copy of the standard; No paper copy may be photocopied or reproduced in any way.

6.4.8 Tests for vertical roll fronts

6.4.8.1 Durability of vertical roll front

6.4.8.1.1 Gently open and close the roll front through 20 000 cycles, each cycle consisting of

– over a period of 3 s, fully opening the roll front, and

– over a period of 3 s, closing the roll front and operating any catching device.

6.4.8.1.2 Check for compliance with 4.5.

6.4.8.1.3 Repeat the test on each roll front of the storage unit.

6.4.8.2 Slamming of vertical roll front

6.4.8.2.1 Attach one end of a cord to the handle of the roll front or as near to the door handle as possible.

6.4.8.2.2 Use a pulley system and a 4,0 kg masspiece to slam the roll front closed 10 times and to slam it open 10 times. So arrange the pulley system that when the roll front is slammed closed, the masspiece touches the floor when the roll front is 10 mm from its fully closed position, and when the roll front is slammed open, the masspiece touches the floor when the roll front is 10 mm from its fully open position. In each case, allow the roll front to slam from a position 300 mm from fully closed or fully open, as relevant.

6.4.8.2.3 Check for compliance with 4.5.

6.4.8.2.4 Repeat the test on each vertical roll front of the storage unit.

6.4.9 Test for drawers

6.4.9.1 Durability of drawers

6.4.9.1.1 Low density application such as covered in SANS 1528-2

6.4.9.1.1.1 Load a randomly selected drawer of the unit under test with a load of 0,33 kg/dm^3 of drawer internal volume.

6.4.9.1.1.2 Open the drawer to a position where

– if the drawer has stops, the drawer is fully open but the stops are not strained,

– if the drawer does not have stops, the lesser of one-third of the drawer's internal length or 100 mm remains inside the carcass of the storage unit (see figure 13).

6.4.9.1.1.3 Measure the deflection of the front of the drawer from a fixed position.

6.4.9.1.1.4 Close the drawer.

6.4.9.1.1.5 Measure the force (applied to the drawer handle) necessary to open the drawer to the position described in 6.4.9.1.1.2, and again close the drawer.

©SABS. Licensed exclusively to Stephen Shole; License ID : GCQZ-0O7J-H04C.
Copying and network storage prohibited.
You can make one paper copy of the standard; No paper copy may be photocopied or reproduced in any way.

6.4.9.1.1.6 By applying the necessary force (without any vertical component) to the handle, gently open and close the drawer through 50 000 cycles, each cycle consisting of

– over a period of 3 s, opening the drawer to the position described in 6.4.9.1.1.2, and

– over a period of 3 s, closing the drawer.

6.4.9.1.1.7 Repeat 6.4.9.1.1.3 and check for compliance with 4.5, and in the event of a failure, establish the cause.

6.4.9.1.2 High density application such as for filing cabinets

Follow the same procedure as for 6.4.9.1.1 but with a load of 0,65 kg/dm^3 of internal drawer volume.

NOTE For heavy duty application, utilize a test load (kg/dm^3) equivalent to 1,25 times the working load and then test as for 6.4.9.1.1.

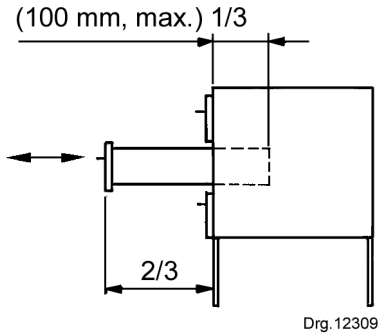

Figure 13 — Durability of drawer

6.4.9.2 Displacement of drawer bottom

NOTE The following test may be carried out by first removing the drawer and its runners from the storage unit or suspending the drawer in the same way as it is suspended in the storage unit.

6.4.9.2.1 Load the drawer under test with a load of 0,65 kg/dm^3 of internal drawer volume.

6.4.9.2.2 Using the loading pads (see 6.4.1.3) apply a horizontal force of 70 N to the middle of the front and to the middle of the back of the drawer (see figure 14), at a position 25 mm above the bottom of the drawer. Apply the load slowly to avoid dynamic loading, and maintain the load for 10 s.

6.4.9.2.3 Repeat 6.4.9.2.2 a further nine times and check for compliance with 4.5.

6.4.9.2.4 Repeat the test on each drawer of the storage unit.

©SABS. Licensed exclusively to Stephen Shole; License ID : GCQZ-0O7J-H04C.
Copying and network storage prohibited.
You can make one paper copy of the standard; No paper copy may be photocopied or reproduced in any way.

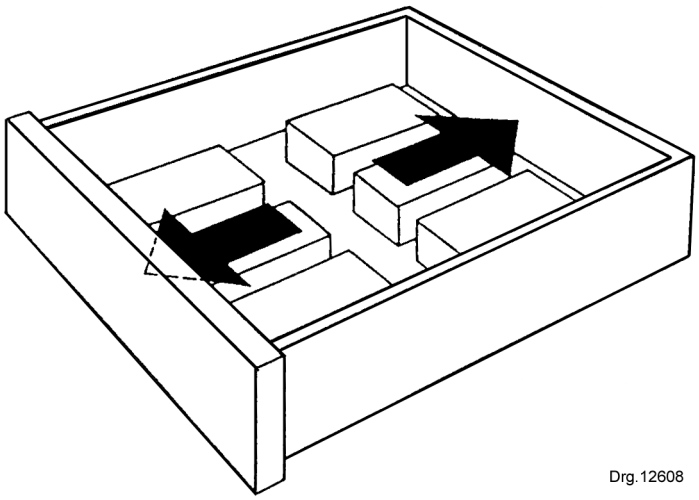

Figure 14 — Displacement of drawer bottom

6.4.9.3 Slamming of drawer

6.4.9.3.1 Apparatus

Suitable apparatus that slams drawers having masses of 5 kg and 35 kg at closing velocities of 2,52 m/s and 1,70 m/s, respectively, provided that the total frictional force of the runners does not exceed 10 N. If the actual closing velocities determined in the calibration of the apparatus are within 5 % of the closing velocities given above, the apparatus is suitable for use in this test. The apparatus closes the drawer from the position shown in figure 15 to within 10 mm of its fully closed position. The drawer reaches its fully closed position under its own momentum.

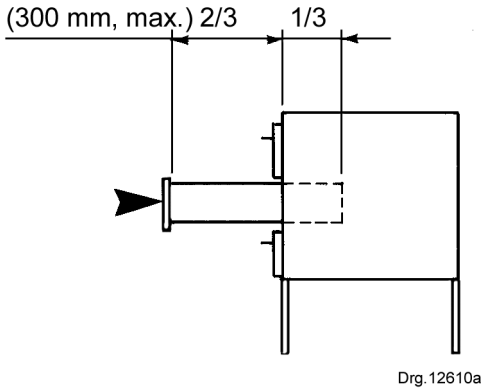

Figure 15 — Slamming of drawer

6.4.9.3.2 Procedure

6.4.9.3.2.1 Select a drawer at random and load the drawer under test with a load of 0,33 kg/dm^3 of internal drawer volume for low density applications, or with a load of 0,65 kg/dm^3 of internal drawer space for high density applications.

6.4.9.3.2.2 Open the drawer to the position shown in figure 15.

©SABS. Licensed exclusively to Stephen Shole; License ID : GCQZ-0O7J-H04C.
Copying and network storage prohibited.
You can make one paper copy of the standard; No paper copy may be photocopied or reproduced in any way.

6.4.9.3.2.3 Use the apparatus to slam the drawer closed 10 times. The apparatus acts either on any handle of the drawer or at the level of the runners. After each slam, rearrange the load in the drawer.

6.4.9.3.2.4 Check for compliance with 4.5.

6.4.9.3.2.5 Repeat the test on each drawer of the storage unit.

6.4.9.4 Strength of runners

6.4.9.4.1 Do not load the drawer under test.

6.4.9.4.2 Open the drawer to the position shown in figure 16.

6.4.9.4.3 Apply a vertical load of 300 N for low density applications or 500 N for high density applications to the centre of the front of the drawer. Apply the load slowly to avoid dynamic loading, and maintain the load for 10 s.

6.4.9.4.4 While the load is being applied, measure the deflection of the drawer from a fixed position.

6.4.9.4.5 Repeat 6.4.9.4.3 a further nine times and, while the load is being applied for the last time, repeat 6.4.9.4.4.

6.4.9.4.6 Check for compliance with 4.5.

6.4.9.4.7 Repeat the test on each drawer of the storage unit.

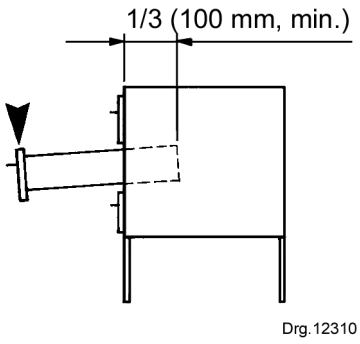

Figure 16 — Strength of runners

6.4.9.5 Strength of suspended filing-pocket fittings

6.4.9.5.1 Load the suspended filing-pocket fittings of one drawer with a load of 2,5 kg/dm of length.

6.4.9.5.2 Measure the deflection (from a straight line) of the centre of the span of the fittings and leave the fittings loaded.

6.4.9.5.3 After one week, repeat 6.4.9.5.2 and calculate the deflection of the fitting due to the loading.

6.4.9.5.4 Check for compliance with 4.5.

©SABS. Licensed exclusively to Stephen Shole; License ID : GCQZ-0O7J-H04C.
Copying and network storage prohibited.
You can make one paper copy of the standard; No paper copy may be photocopied or reproduced in any way.

6.4.10 Test for strength of structure and underframe

NOTE This test is not carried out on storage units that are intended to be connected to the structure of a building.

6.4.10.1 Place stops around legs (or plinths) 1 and 2 (see figure 17) of the storage unit.

6.4.10.2 Close all drawers, flaps and roll fronts but open doors through 90° (or fully open if less than 90°).

6.4.10.3 Apply a force of 100 N at point A for 10 s (see figure 17). Point A (and likewise B, C and D) is

– on the centre line of the storage unit, and

– at the highest point on the storage unit at that position but not higher than 1 600 mm above the floor.

NOTE If the point of application of the force coincides with an opening or an open door, use a bar to span the opening.

Apply the force slowly to avoid dynamic loading, and maintain the force for 10 s.

6.4.10.4 While the force is being applied, measure the deflection *d* (see figure 17).

6.4.10.5 Repeat 6.4.10.3 a further nine times and, while the force is being applied for the last time, repeat 6.4.10.4.

6.4.10.6 Check for compliance with 4.5.

6.4.10.7 Repeat the test at each of points B, C and D but place stops around legs (or plinths) 2 and 3 when the force is to be applied at points C and D.

6.4.11 Test for strength of wall attachment

NOTE This test is carried out on storage units that are intended to be wall mounted.

6.4.11.1 Attach the storage unit to a wall in accordance with the manufacturer's instructions (see 5.2(e)); if the instructions can be interpreted in more than one way, interpret them such that the storage unit is installed in the way most adverse for testing (see 5.2(e)).

6.4.11.2 Load all parts that can be used for storage purposes, using the loads given in table 4, uniformly distributed.

6.4.11.3 Allow the storage unit to remain loaded for one week.

6.4.11.4 Check for compliance with 4.5.

Table 4 — Strength of wall attachment

1	2
Part to be loaded	**Load to be applied**
Horizontal surfaces, shelves, door baskets	3 kg/dm^3
Drawers/extending elements	0,98 kg/dm^3
Suspended filing-pocket fittings	3,75 kg/dm
Clothes rails	6,0 kg/dm

©SABS. Licensed exclusively to Stephen Shole; License ID : GCQZ-0O7J-H04C.
Copying and network storage prohibited.
You can make one paper copy of the standard; No paper copy may be photocopied or reproduced in any way.

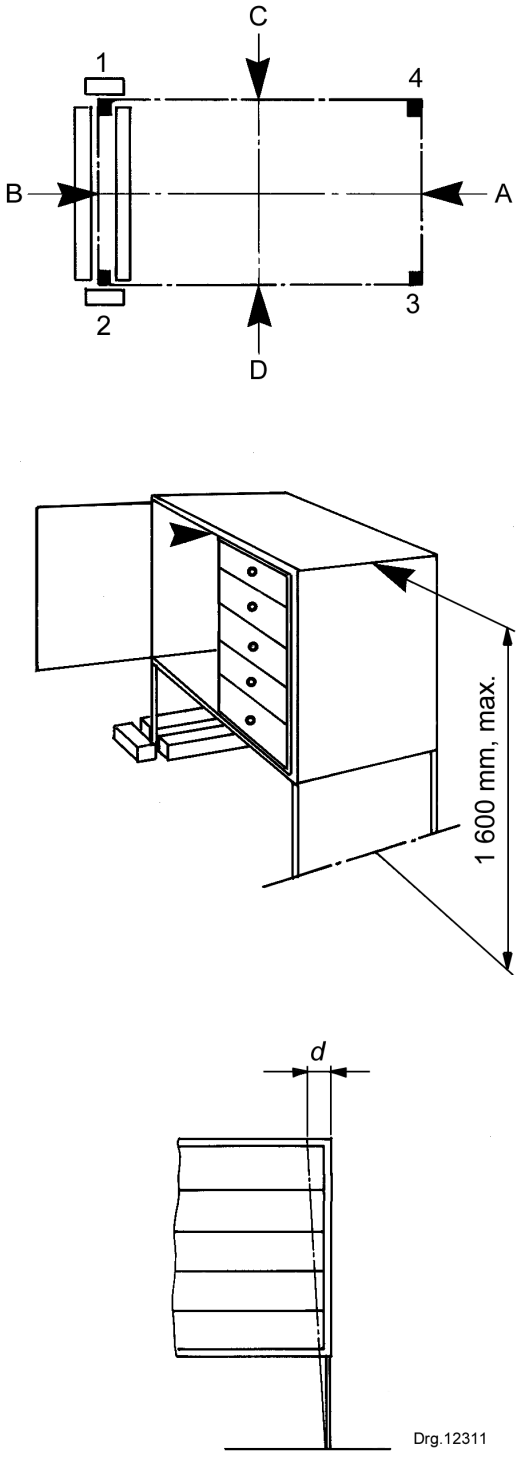

Figure 17 — Strength of structure and underframe

©SABS. Licensed exclusively to Stephen Shole; License ID : GCQZ-0O7J-H04C.
Copying and network storage prohibited.
You can make one paper copy of the standard; No paper copy may be photocopied or reproduced in any way.

6.4.12 Impact test on postformed edges

6.4.12.1 Apparatus

6.4.12.1.1 Use the apparatus illustrated in figure 18.

6.4.12.1.2 **Colouring materials** that contrast with the colour of the edge under test.

6.4.12.1.3 **Magnifier** that provides magnification of at least 7X.

6.4.12.2 Procedure

6.4.12.2.1 Mark 10 test points along the postformed edge, at approximately 20 mm centres.

6.4.12.2.2 Fit the worktop in the 45° angle jig.

6.4.12.2.3 So fix the guide tube vertically that the disc is in contact with the postformed edge and the steel ball is touching a test point.

6.4.12.2.4 Raise the steel masspiece then allow it to drop onto the steel ball as follows:

– through a height of 100 mm, measured from the top of the steel ball to the underside of the steel masspiece, once at each of five test points;

– through a height of 50 mm at each of the five remaining test points.

6.4.12.2.5 Remove the worktop from the jig and apply an appropriate colouring material (see 6.4.12.1.1) to each of the test points.

6.4.12.2.6 Using the magnifier, inspect each test point and rate it in accordance with table 5.

6.4.12.2.7 Check for compliance with 4.3.2.

Table 5 — Ratings for impact test on postformed edges

1	2
Extent of impact mark caused by steel ball	**Rating**
No visible mark	5
No cracking; impact mark hardly visible	4
Slight cracking at surface at boundary of impact (arc or circle cracks)	3
Moderate to severe cracking within the boundary of impact	2
Cracks that extend outside the boundary of impact or flaking of surface finish or both	1

© SABS

©SABS. Licensed exclusively to Stephen Shole; License ID : GCQZ-0O7J-H04C.
Copying and network storage prohibited.
You can make one paper copy of the standard; No paper copy may be photocopied or reproduced in any way.

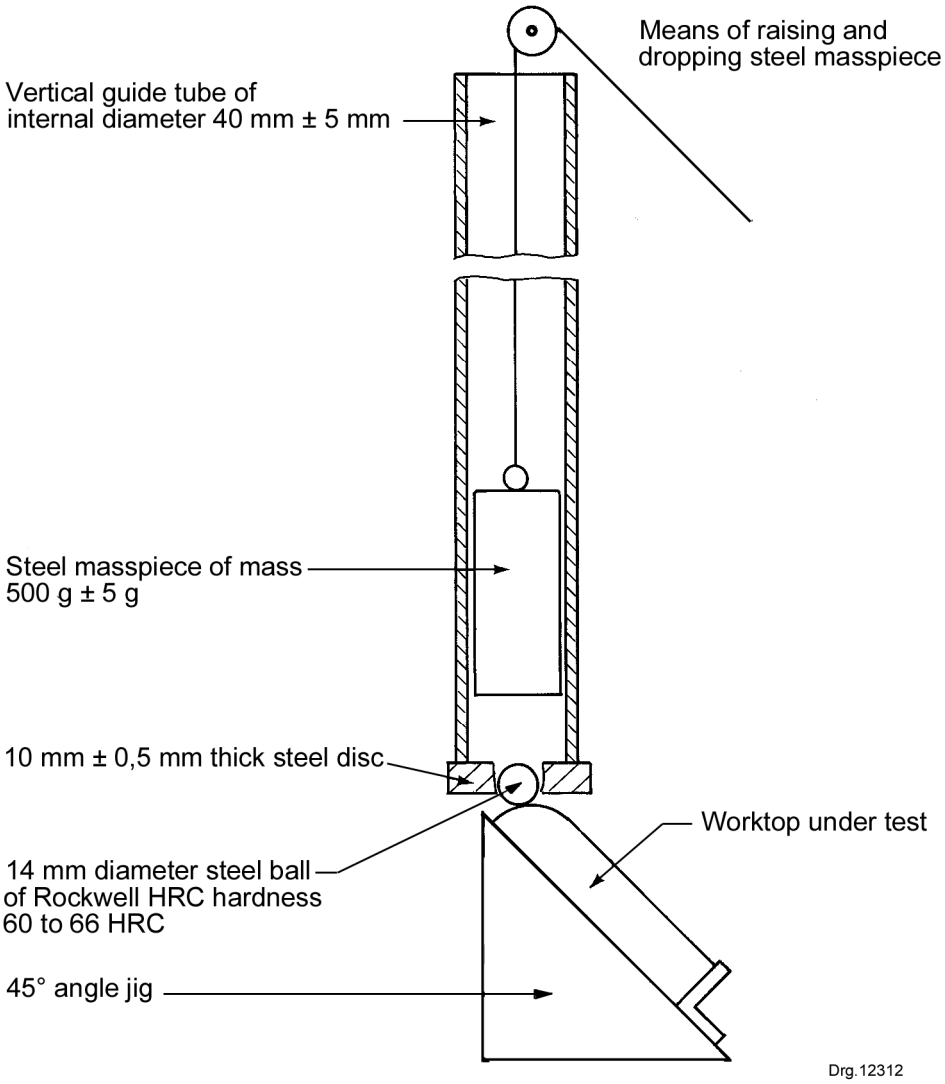

NOTE 1 The hardness of the steel masspiece is less than of the steel ball to avoid making indentations on the ball.

NOTE 2 The hole in the disc is not more than 0,1 mm larger than the diameter of the ball and the ball is held with its top 0,5 mm to 1,0 mm below the top of the disc.

NOTE 3 During the impact, the disc is touching the postformed edge.

Figure 18 — Apparatus for impact test on postformed edges

©SABS. Licensed exclusively to Stephen Shole; License ID : GCQZ-0O7J-H04C.
Copying and network storage prohibited.
You can make one paper copy of the standard; No paper copy may be photocopied or reproduced in any way.

Annex A
(informative)

Notes to purchasers

Storage units that comply with the requirements of this part of SANS 1528 have adequate stability, strength and durability for their intended purpose. The choice of which storage unit to purchase depends upon the purchaser's personal preferences, therefore no materials have been specified. All materials that are used have, however, to comply with the requirements of an applicable standard. For example, if a storage unit uses laminated timber the laminated timber used in the storage unit has to comply with the requirements of the national standard for laminated timber. However, if a material is used for which there is no applicable national standard the supplier has to identify the specification with which the material complies. The purchaser can then decide whether the use of that material satisfies his needs. Each storage unit has to have a data sheet that identifies the materials used.

When a purchaser wishes to enter into a contract for the supply of storage units, this part of SANS 1528 could be used as a basis for such a contract to ensure that the storage units are functional. But the purchaser would have to further specify any features that may be offered by the manufacturer or such features as the following:

– colour;

– surface finish;

– whether the storage unit has to have luminaires;

– whether shelves have to be adjustable;

– whether parts such as drawers have to be lockable and how many keys have to be supplied for each lock;

– whether combination locks have to be fitted;

– whether central locking is required;

– whether filing cabinets and pigeon holes have to have label holders on the front;

– whether the storage units are intended to be bolted together or to the floor;

– whether drawers have to have built-in stops;

– how many shelves are needed for each storage unit.

The above list is not comprehensive and the purchaser should examine each type of storage unit to ensure that it has the required features.

©SABS. Licensed exclusively to Stephen Shole; License ID : GCQZ-0O7J-H04C.
Copying and network storage prohibited.
You can make one paper copy of the standard; No paper copy may be photocopied or reproduced in any way.

Annex B
(informative)

Quality verification of storage units

When a purchaser requires ongoing verification of the quality of storage units, it is suggested that, instead of concentrating solely on evaluation of the final product, he also direct his attention to the manufacturer's quality system. In this connection it should be noted that SANS 9001 covers the provision of an integrated quality system. **Amdt 2**

©SABS. Licensed exclusively to Stephen Shole; License ID : GCQZ-0O7J-H04C.
Copying and network storage prohibited.
You can make one paper copy of the standard; No paper copy may be photocopied or reproduced in any way.

Annex C
(normative)

Dimensions of storage units

The dimensions of storage units that comply with this part of SANS 1528 are shown in figures C.1 to C.24.

Timber shall be certified in accordance with the relevant national department (see foreword).

All wooden components of wooden furniture shall be coated with synthetic resin lacquer.

Dimensions in millimetres

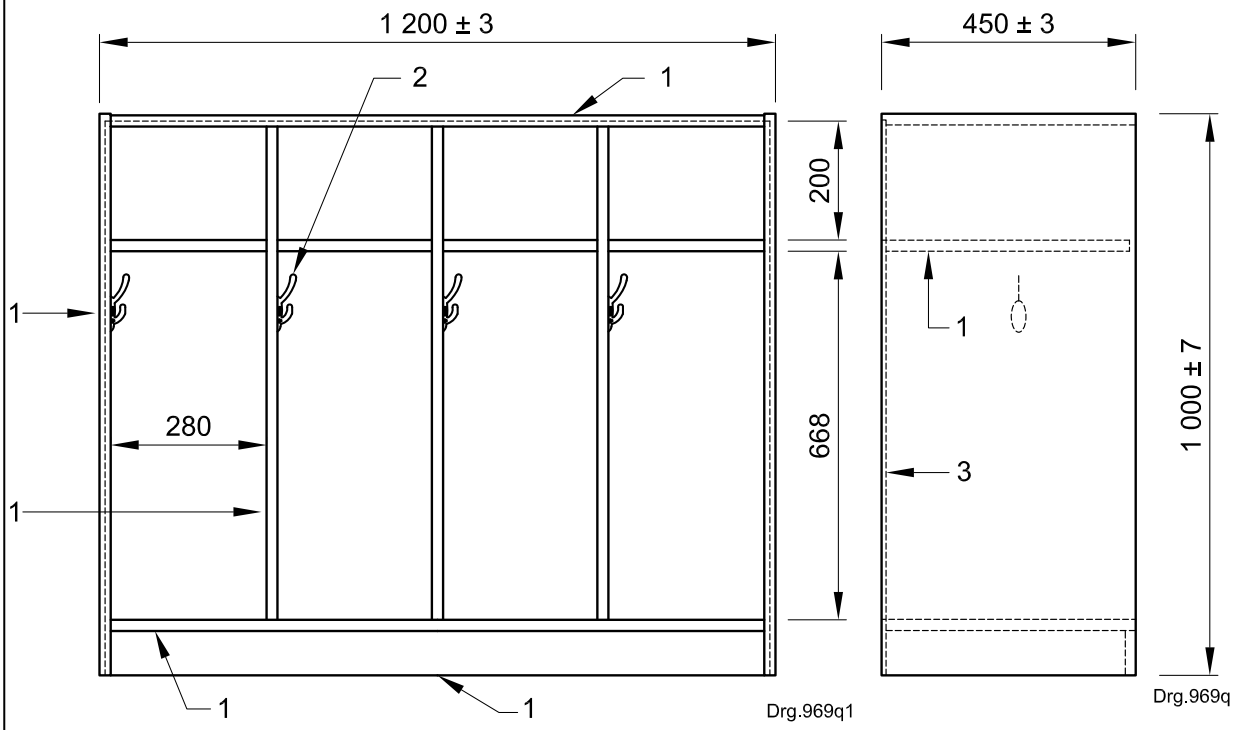

a) Lateral section **b) Side view**

Key

1 carcass (top, sides, bottom, shelves, divisions and kickplate)
2 hook (hat and coat)
3 3,2 mm hardboard back

The carcass shall be made from 21 mm *Saligna* hardwood (*Eucalyptus grandis*) in accordance with SANS 1460.

The hardboard shall be made from Masonite in accordance with SANS 540-1.

Figure C.1 — Grade R storage unit — *Saligna*

Amdt 3

©SABS. Licensed exclusively to Stephen Shole; License ID : GCQZ-0O7J-H04C.
Copying and network storage prohibited.
You can make one paper copy of the standard; No paper copy may be photocopied or reproduced in any way.

Dimensions in millimetres

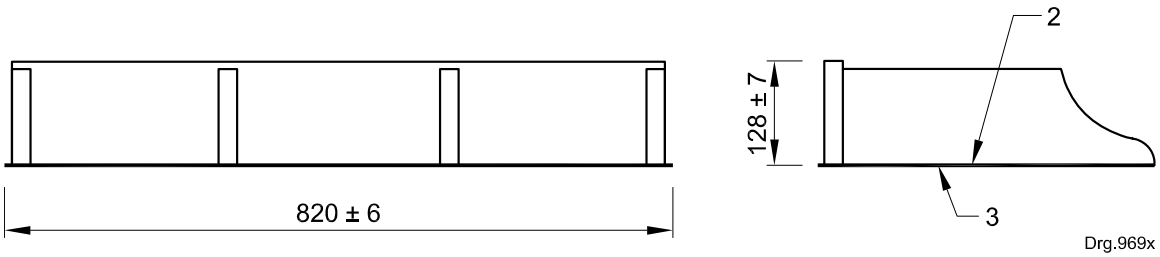

a) Front view **b) Side view**

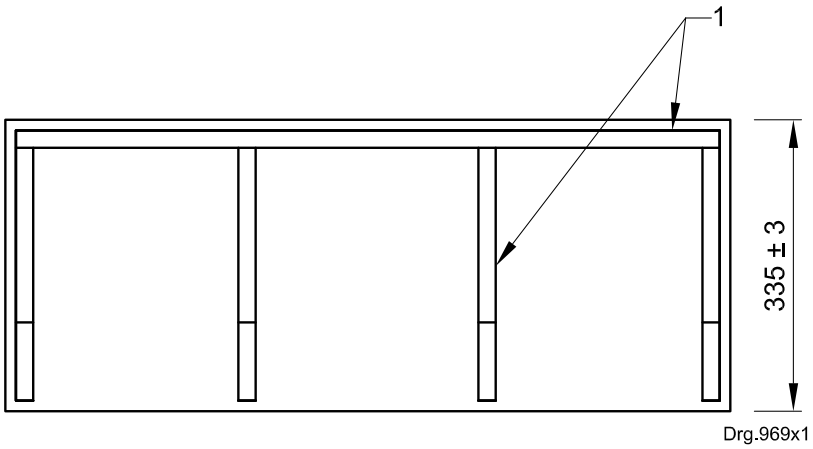

c) Top view

Key

1 back, sides and divisions
2 6,4 mm hardboard bottom
3 protective strip

The back, sides and divisions shall be made from 21 mm *Saligna* hardwood (*Eucalyptus grandis*).

The 6,4 mm hardboard bottom shall be in accordance with SANS 540-1.

Figure C.2 — Correspondence rack — *Saligna*

Amdt 3

©SABS. Licensed exclusively to Stephen Shole; License ID : GCQZ-0O7J-H04C.
Copying and network storage prohibited.
You can make one paper copy of the standard; No paper copy may be photocopied or reproduced in any way.

Dimensions in millimetres

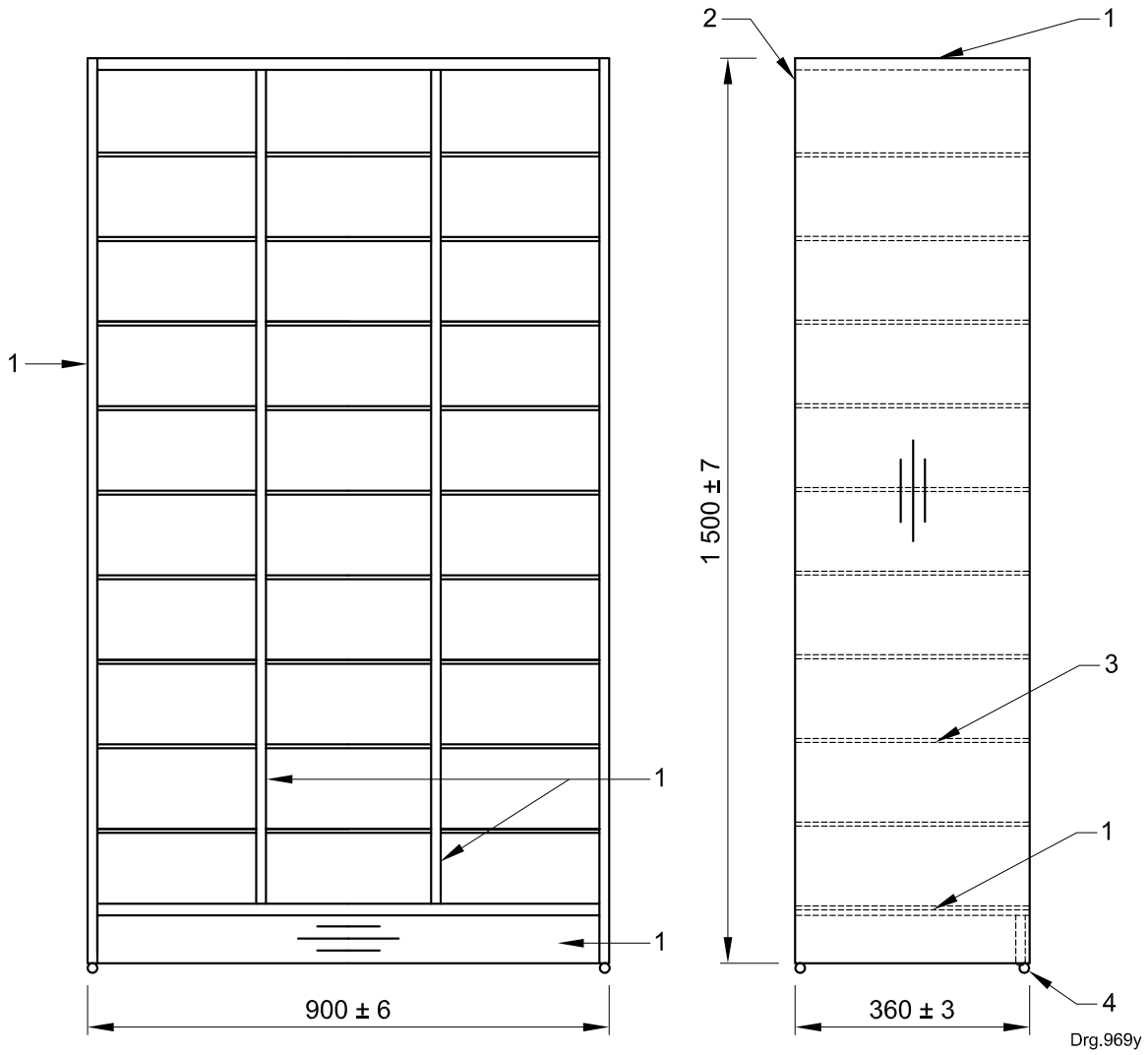

a) Front view **b) Side view**

Key

1 carcass (top, sides, divisions and kickplate)
2 3,2 mm hardboard back
3 6,4 mm hardboard shelf
4 glide

The carcass shall be made from 16 mm substrate veneer board in accordance with SANS 929, and all the edges shall be sealed with matching veneer.

The 3,2 mm hardboard back and the 6,4 mm hardboard shelves shall be in accordance with SANS 540-1.

The glide shall be fitted with nails.

Figure C.3 — Pigeon hole — *Okoume* veneer

Amdt 3

©SABS. Licensed exclusively to Stephen Shole; License ID : GCQZ-0O7J-H04C.
Copying and network storage prohibited.
You can make one paper copy of the standard; No paper copy may be photocopied or reproduced in any way.

Dimensions in millimetres

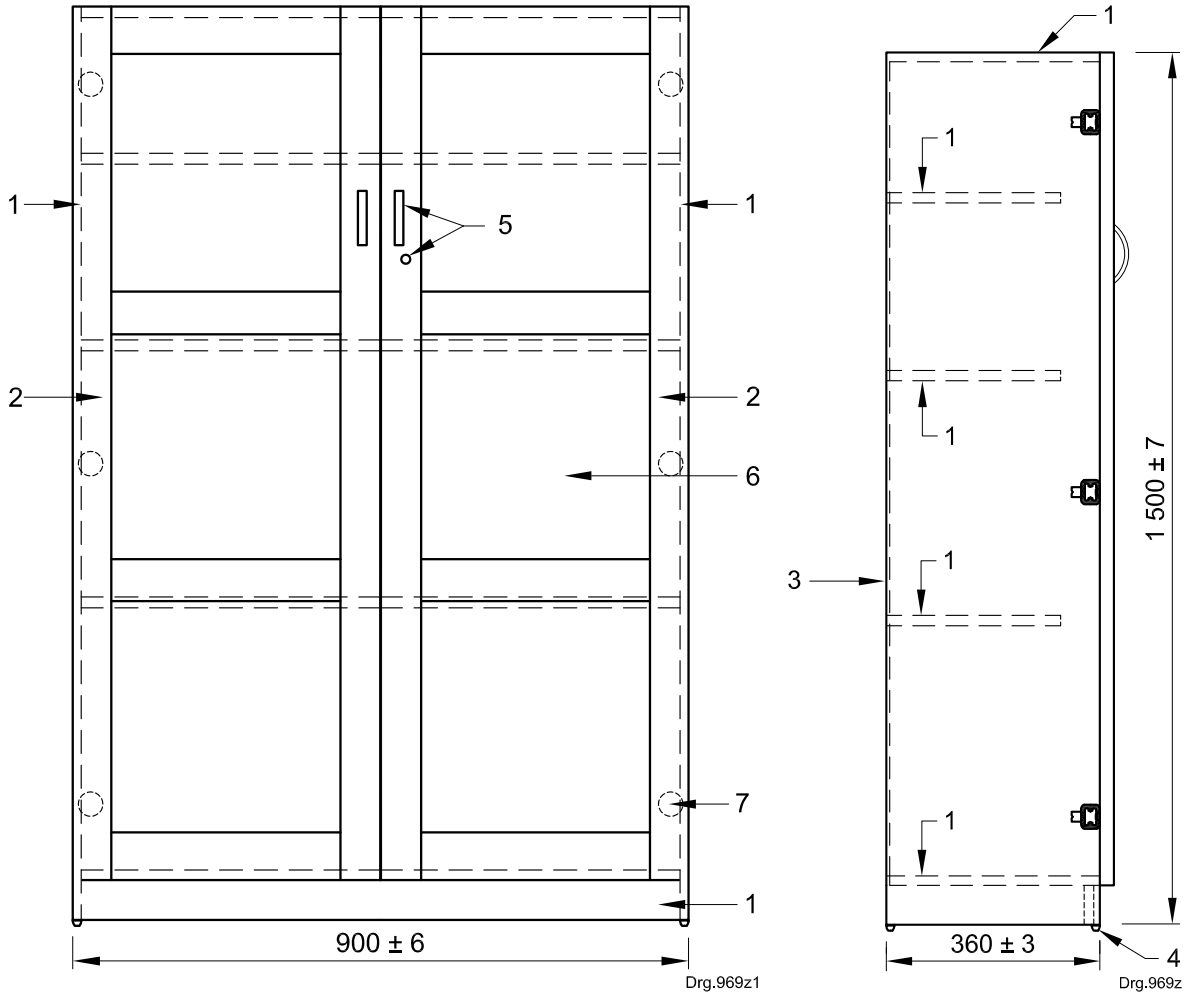

a) Front view **b) Side view**

Key

1 carcass (top, bottom, sides and fixed shelves)
2 door frame
3 3,2 mm hardboard back
4 glide
5 acceptable lock and handle
6 3 mm clear float glass
7 acceptable concealed hinge and base plate

The carcass shall be made from 16 mm substrate veneer board in accordance with SANS 929, and all the edges shall be sealed with matching veneer.

The door frame assemblies shall be made from 21 mm solid *Saligna* hardwood (*Eucalyptus grandis*) in accordance with SANS 1460.

The 3,2 mm hardboard back shall be in accordance with SANS 540-1.

The glide shall be fitted with nails.

Figure C.4 — Glazed door bookcase — *Saligna*

Amdt 3

©SABS. Licensed exclusively to Stephen Shole; License ID : GCQZ-0O7J-H04C.
Copying and network storage prohibited.
You can make one paper copy of the standard; No paper copy may be photocopied or reproduced in any way.

Dimensions in millimetres

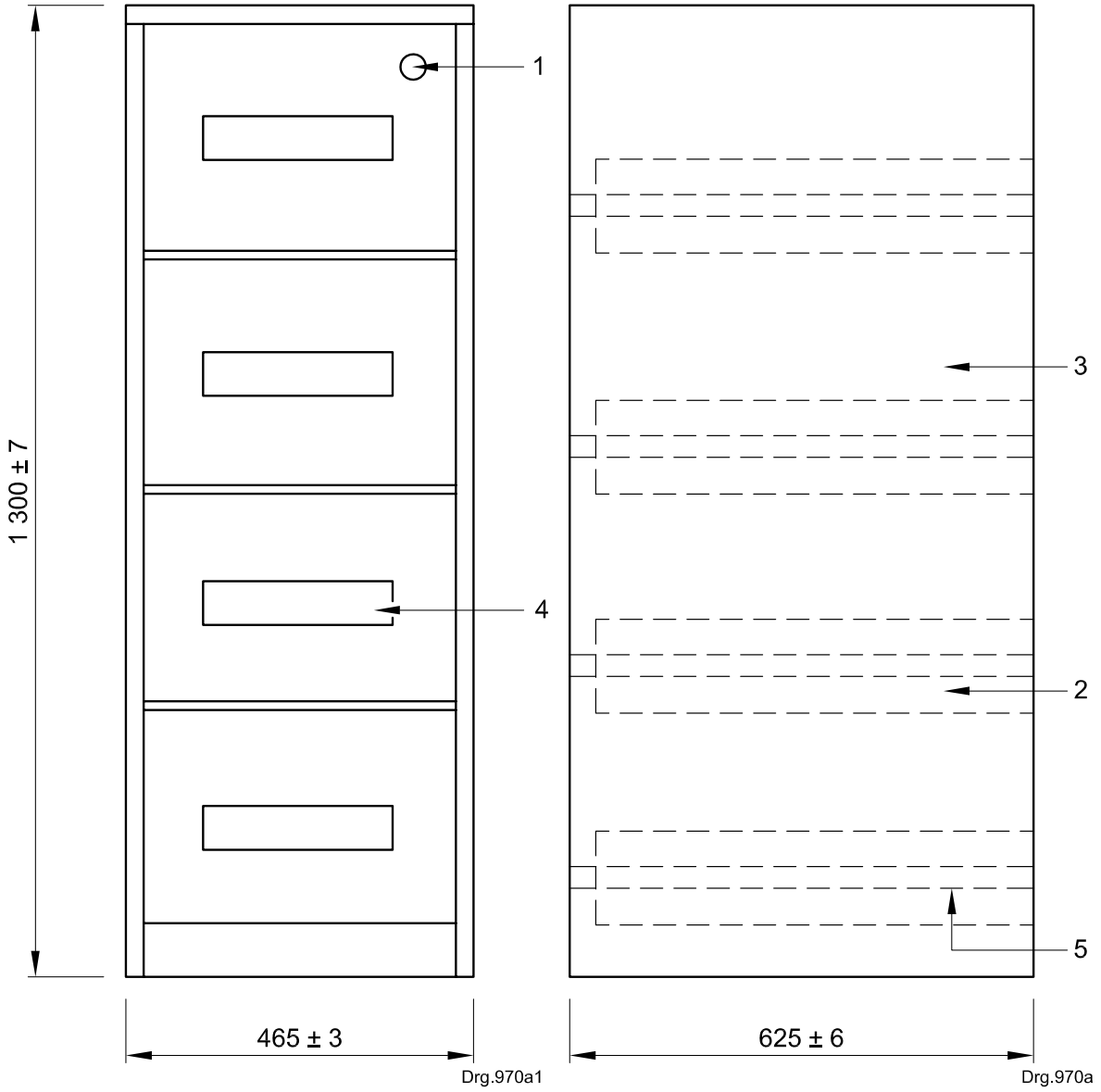

a) Front view **b) Side view**

Key

1 cylinder-type central locking device
2 acceptable cradle for suspension of pocket-type folders
3 metal sheet
4 acceptable handle
5 full extension metal drawer

The metal sheet of the filing cabinet shall be constructed such that the coating is of a baked epoxy or polyester finish in accordance with SANS 1274.

Each pair of drawer runners shall have a carrying capacity of 50 kg.

Figure C.5 — Filing cabinet — Steel

Amdt 3

©SABS. Licensed exclusively to Stephen Shole; License ID : GCQZ-0O7J-H04C.
Copying and network storage prohibited.
You can make one paper copy of the standard; No paper copy may be photocopied or reproduced in any way.

Dimensions in millimetres

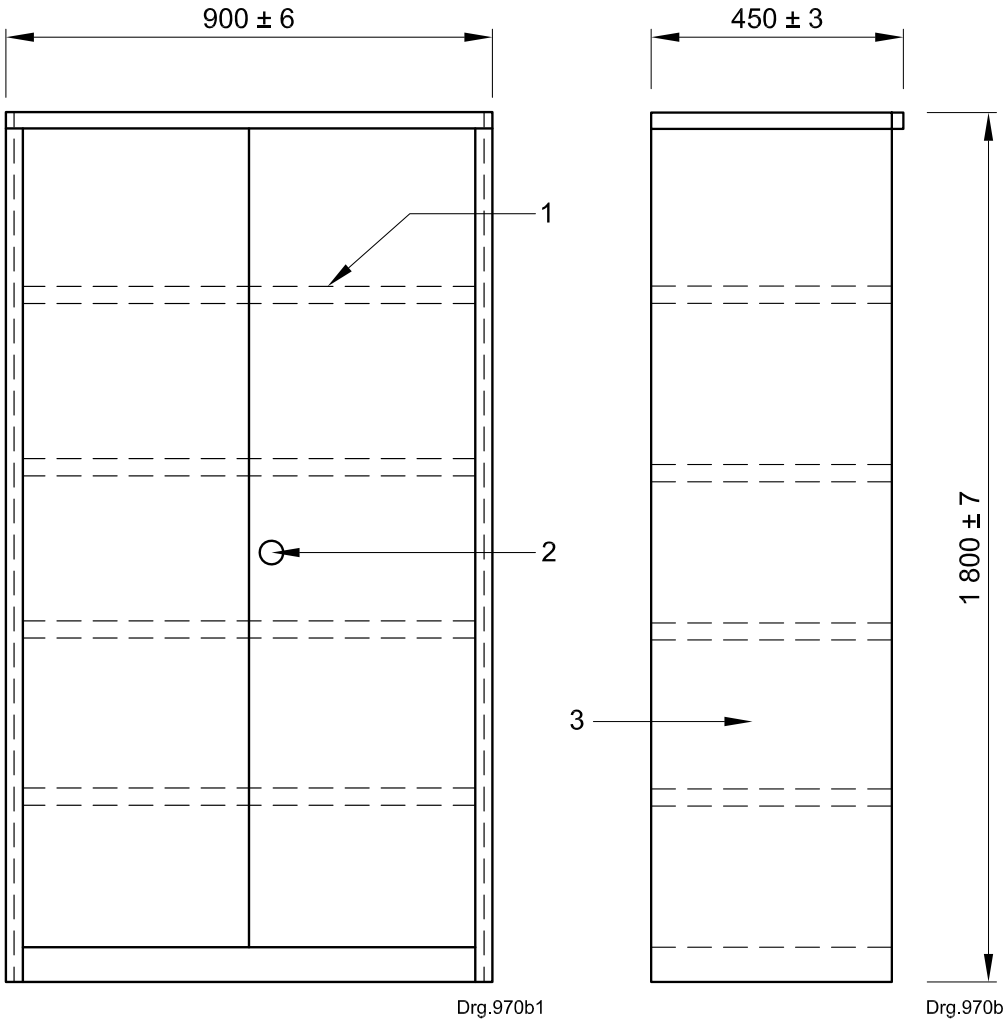

a) Front view **b) Side view**

Key

1 steel adjustable shelf
2 cylinder lock with handle
3 metal sheet

The stationery cupboard shall be fitted with a cylinder lock that forms an integral part of the handle.

The metal sheet of the stationery cupboard shall be constructed such that the coating is of a baked epoxy or polyester finish in accordance with SANS 1274.

Figure C.6 — 1 800 mm stationery cupboard — Steel

Amdt 3

©SABS. Licensed exclusively to Stephen Shole; License ID : GCQZ-0O7J-H04C.
Copying and network storage prohibited.
You can make one paper copy of the standard; No paper copy may be photocopied or reproduced in any way.

Dimensions in millimetres

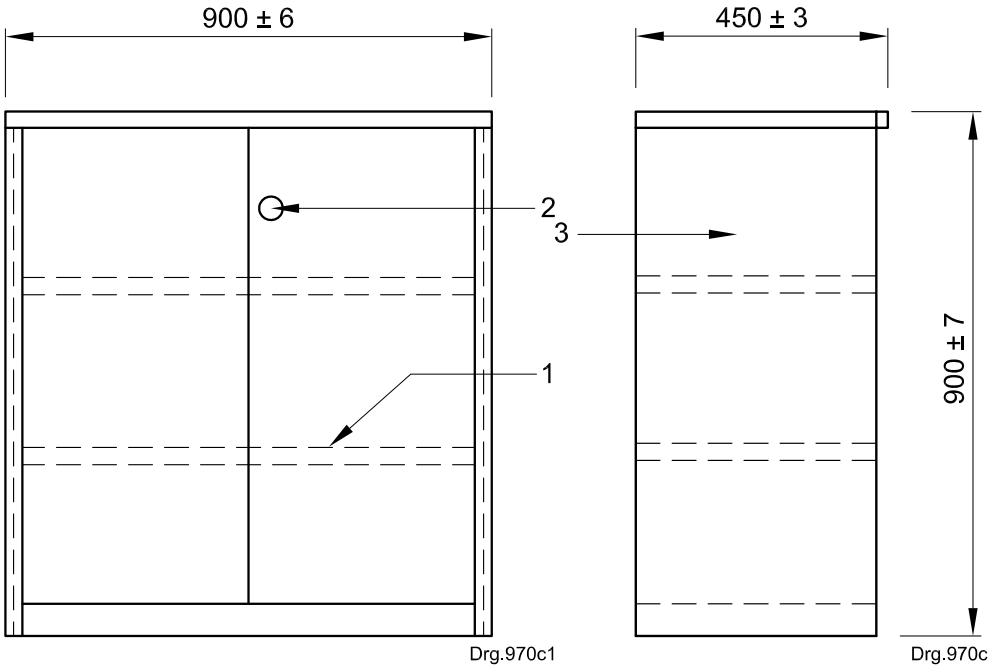

a) Front view **b) Side view**

Key

1 steel adjustable shelf
2 acceptable cylinder lock
3 metal sheet

The stationery cupboard shall be fitted with a cylinder lock that forms an integral part of the handle.

The metal sheet of the stationery cupboard shall be constructed such that the coating is of a baked epoxy or polyester finish in accordance with SANS 1274.

Figure C.7 — 900 mm stationery cupboard — Steel

Amdt 3

©SABS. Licensed exclusively to Stephen Shole; License ID : GCQZ-0O7J-H04C.
Copying and network storage prohibited.
You can make one paper copy of the standard; No paper copy may be photocopied or reproduced in any way.

Dimensions in millimetres

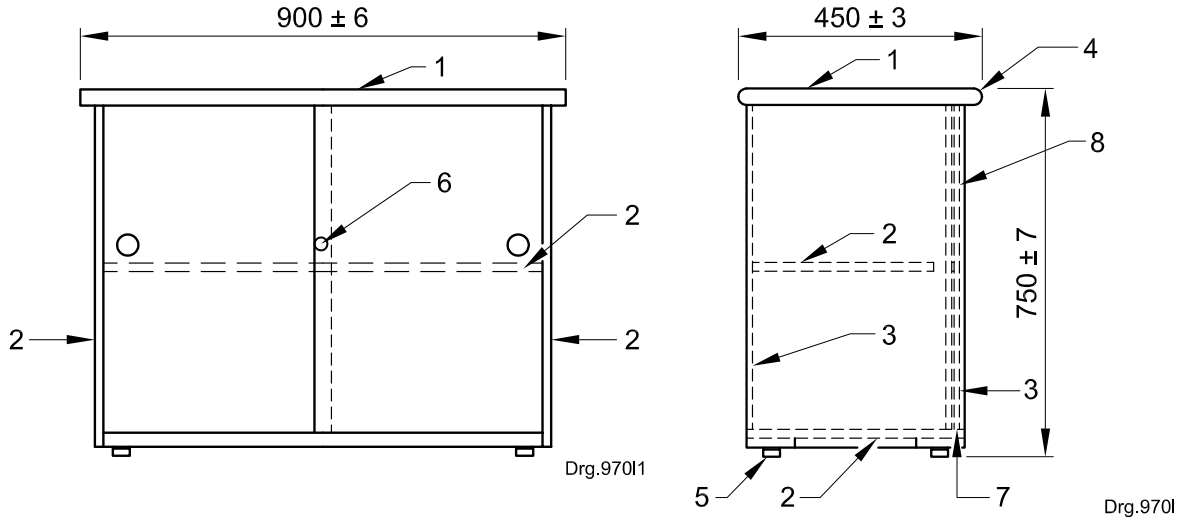

a) Front view **b) Side view**

Key

1 top of credenza
2 carcass (sides, bottom and adjustable shelf)
3 doors and back of credenza
4 top edge
5 adjustable foot
6 acceptable handle and lock (push button)
7 PVC door-sliding channels
8 sliding doors

The top of the credenza shall be made from postformed 180° decorative melamine oak with balancing backer laminated on 32 mm substrate particle board in accordance with SANS 929.

The carcass shall be made from 16 mm double-sided melamine-faced natural oak in accordance with SANS 929.

The doors and back (grooved and glued) of the credenza shall be made from 16 mm double-sided melamine-faced particle board made from natural oak in accordance with SANS 929.

The 2 mm thick top edges shall be sealed with matching PVC edging.

Figure C.8 — Credenza — Oak melamine

Amdt 3

©SABS. Licensed exclusively to Stephen Shole; License ID : GCQZ-0O7J-H04C.
Copying and network storage prohibited.
You can make one paper copy of the standard; No paper copy may be photocopied or reproduced in any way.

Dimensions in millimetres

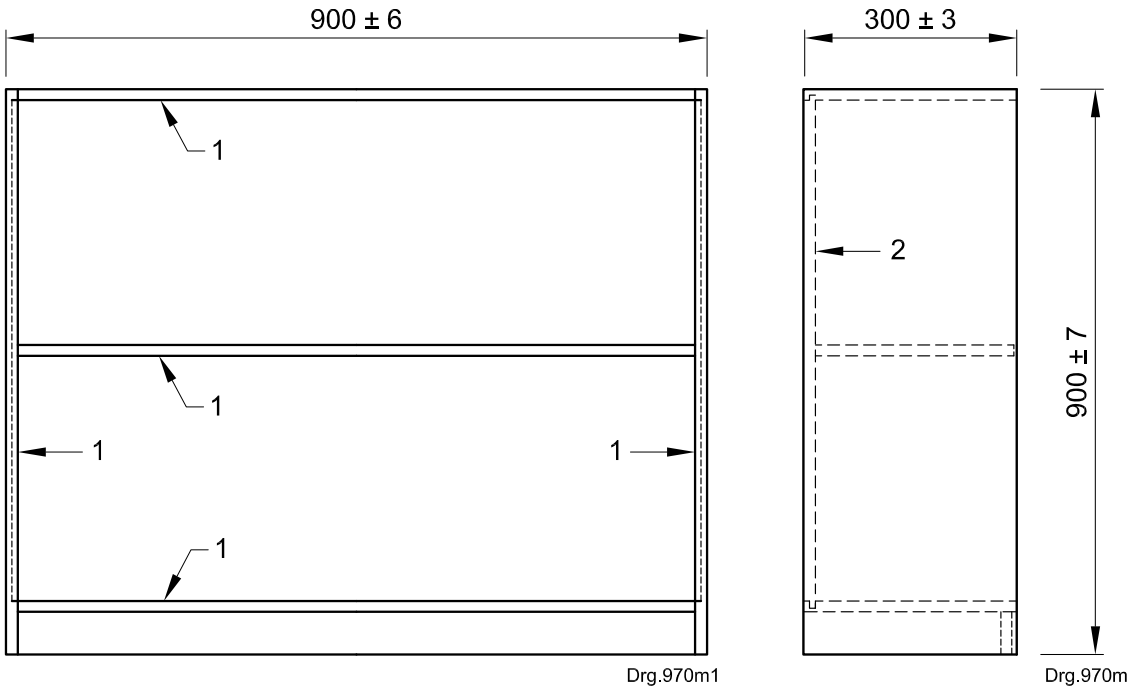

a) Front view **b) Side view**

Key

1 carcass (sides, bottom and fixed shelf)
2 back of shelving unit

The carcass shall be made from 16 mm double-sided melamine-faced natural oak in accordance with SANS 929, and all the edges shall be sealed with matching PVC edging.

The back (grooved and glued) of the shelving unit shall be made from 16 mm double-sided melamine-faced particle board made from natural oak in accordance with SANS 929.

Figure C.9 — Shelving unit — Oak melamine

Amdt 3

©SABS. Licensed exclusively to Stephen Shole; License ID : GCQZ-0O7J-H04C.
Copying and network storage prohibited.
You can make one paper copy of the standard; No paper copy may be photocopied or reproduced in any way.

Dimensions in millimetres

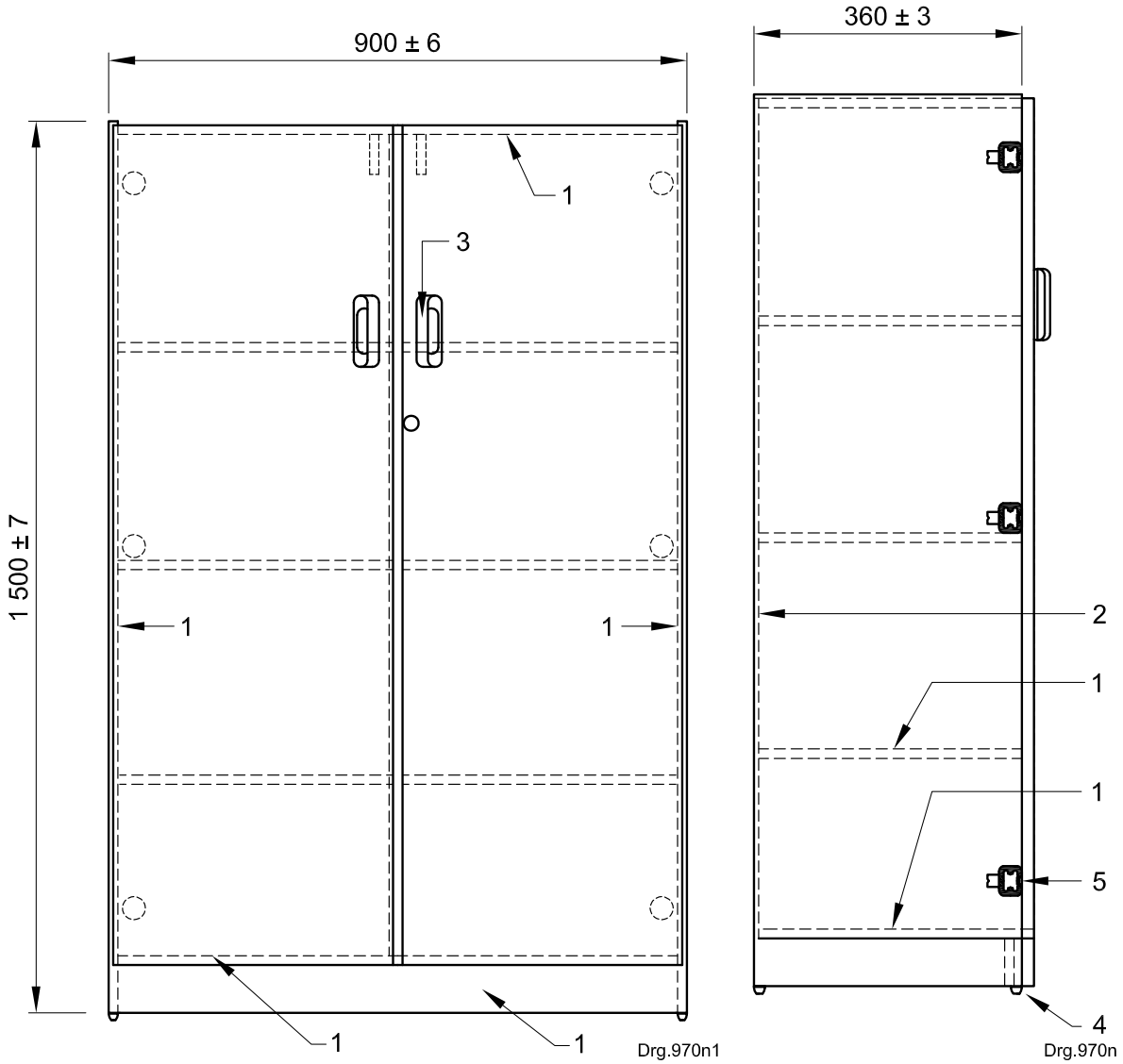

a) Front view **b) Side view**

Key

1 carcass (sides, bottom and fixed shelf)
2 back of the stationery cupboard
3 solid oak cup handle
4 acceptable feet glide, fitted with nails
5 acceptable concealed hinges

The carcass shall be made from 16 mm double-sided melamine-faced natural oak in accordance with SANS 929, and all the edges shall be sealed with matching PVC edging.

The back (grooved and glued) of the stationery cupboard shall be made from 16 mm double-sided melamine-faced particle board made from natural oak in accordance with SANS 929.

The handles shall be made from natural oak-faced particle board in accordance with SANS 929.

Figure C.10 — Stationery cupboard — Oak melamine

Amdt 3

©SABS. Licensed exclusively to Stephen Shole; License ID : GCQZ-0O7J-H04C.
Copying and network storage prohibited.
You can make one paper copy of the standard; No paper copy may be photocopied or reproduced in any way.

Dimensions in millimetres

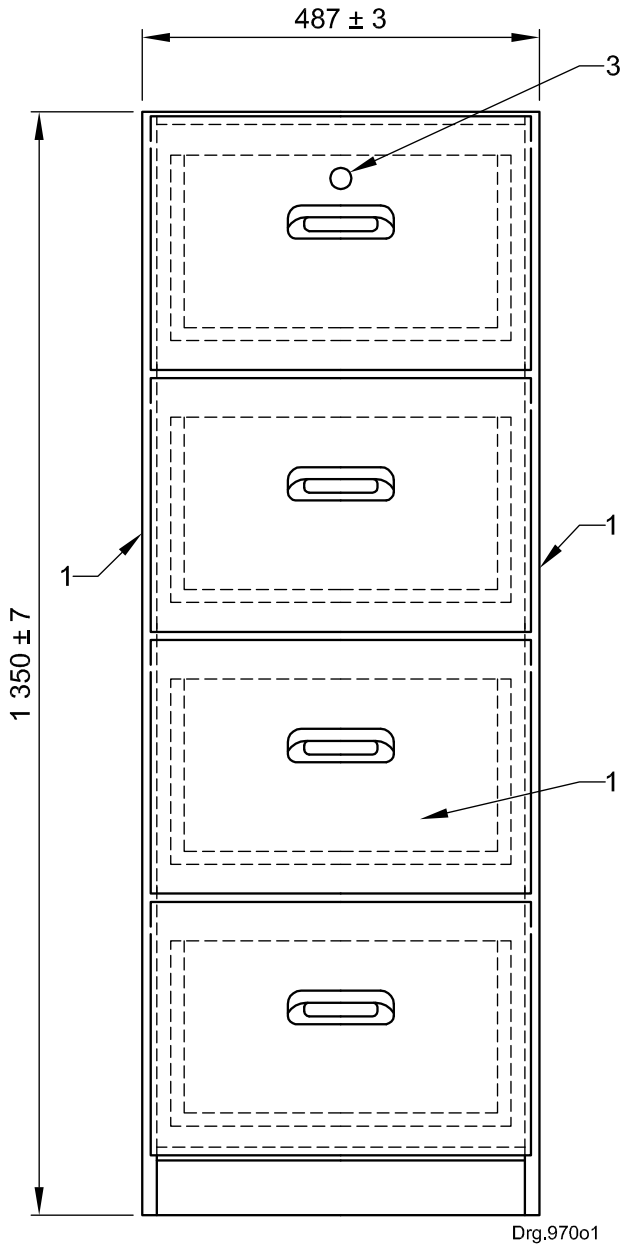

a) Front view

Key

1 carcass (sides, bottom and fixed shelf)
2 back of filing cabinet
3 acceptable lock
4 drawer carcass
5 acceptable handle
6 full extension metal drawer runners

Figure C.11 — Filing cabinet — Oak melamine

Amdt 3

©SABS. Licensed exclusively to Stephen Shole; License ID : GCQZ-0O7J-H04C.
Copying and network storage prohibited.
You can make one paper copy of the standard; No paper copy may be photocopied or reproduced in any way.

Dimensions in millimetres

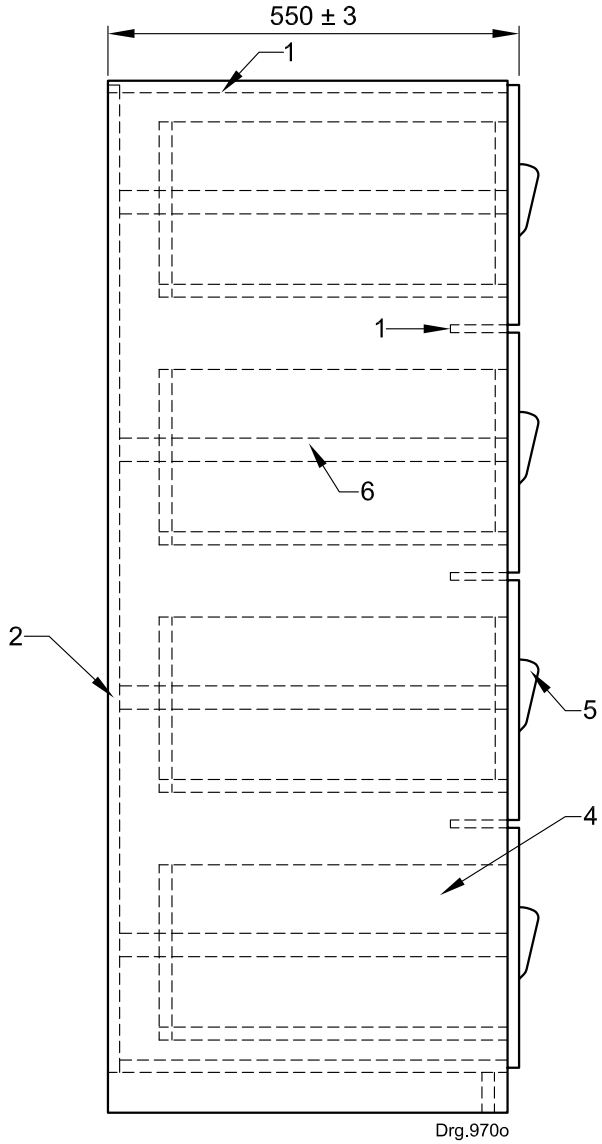

Key

1 carcass (sides, bottom and fixed shelf)
2 back of filing cabinet
3 acceptable lock
4 drawer carcass
5 acceptable handle
6 full extension metal drawer runners

b) Side view

The carcass shall be made from 16 mm double-sided melamine-faced natural oak in accordance with SANS 929, and all the edges shall be sealed with matching PVC edging.

The back (grooved and glued) of the filing cabinet shall be made from 16 mm double-sided melamine-faced particle board made from natural oak in accordance with SANS 929.

The handles shall be made from natural oak-faced particle board in accordance with SANS 929.

The drawer carcasses shall be made from double-sided melamine-faced 16 mm particle board in accordance with SANS 929, and all the edges shall be sealed with matching PVC edging. A4 pocket folders shall fit in the drawers in the hanging position. The top edges shall be sealed with at least 2 mm thick PVC edging.

Each pair of runners shall have a carrying capacity of 50 kg.

Figure C.11 — Filing cabinet — Oak melamine *(concluded)*

Amdt 3

©SABS. Licensed exclusively to Stephen Shole; License ID : GCQZ-0O7J-H04C.
Copying and network storage prohibited.
You can make one paper copy of the standard; No paper copy may be photocopied or reproduced in any way.

Dimensions in millimetres

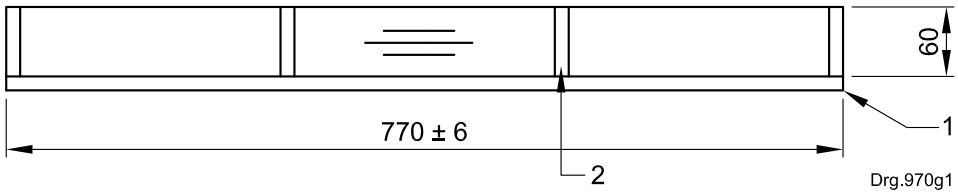

a) Front view

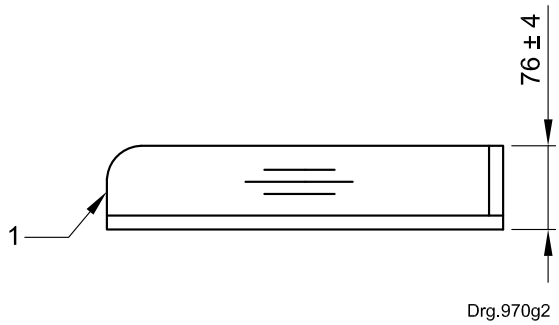

b) Side view

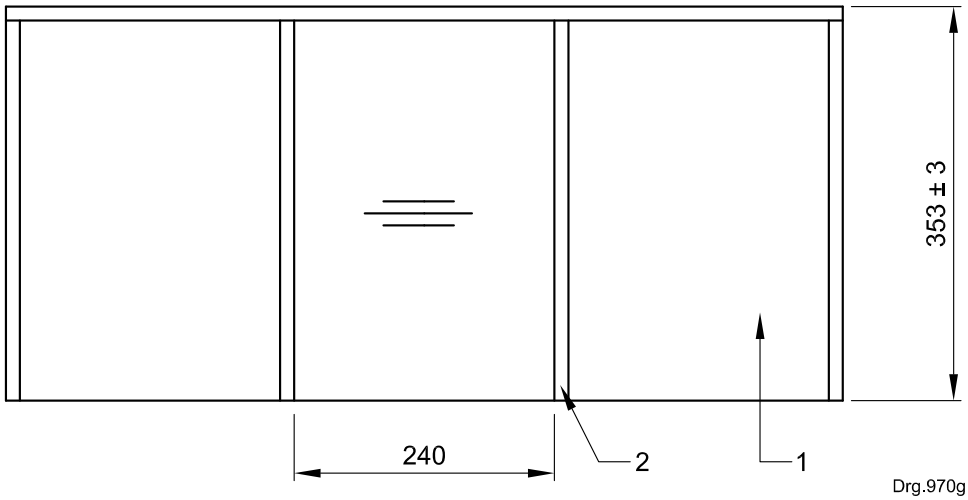

c) Top view

Key

1 carcass (sides, bottom and fixed shelf)
2 PVC edging

The carcass shall be made from 16 mm double-sided melamine-faced natural oak in accordance with SANS 929.

All the edges shall be sealed with matching PVC edging.

Figure C.12 — Correspondence rack — Oak melamine

Amdt 3

©SABS. Licensed exclusively to Stephen Shole; License ID : GCQZ-0O7J-H04C.
Copying and network storage prohibited.
You can make one paper copy of the standard; No paper copy may be photocopied or reproduced in any way.

Dimensions in millimetres

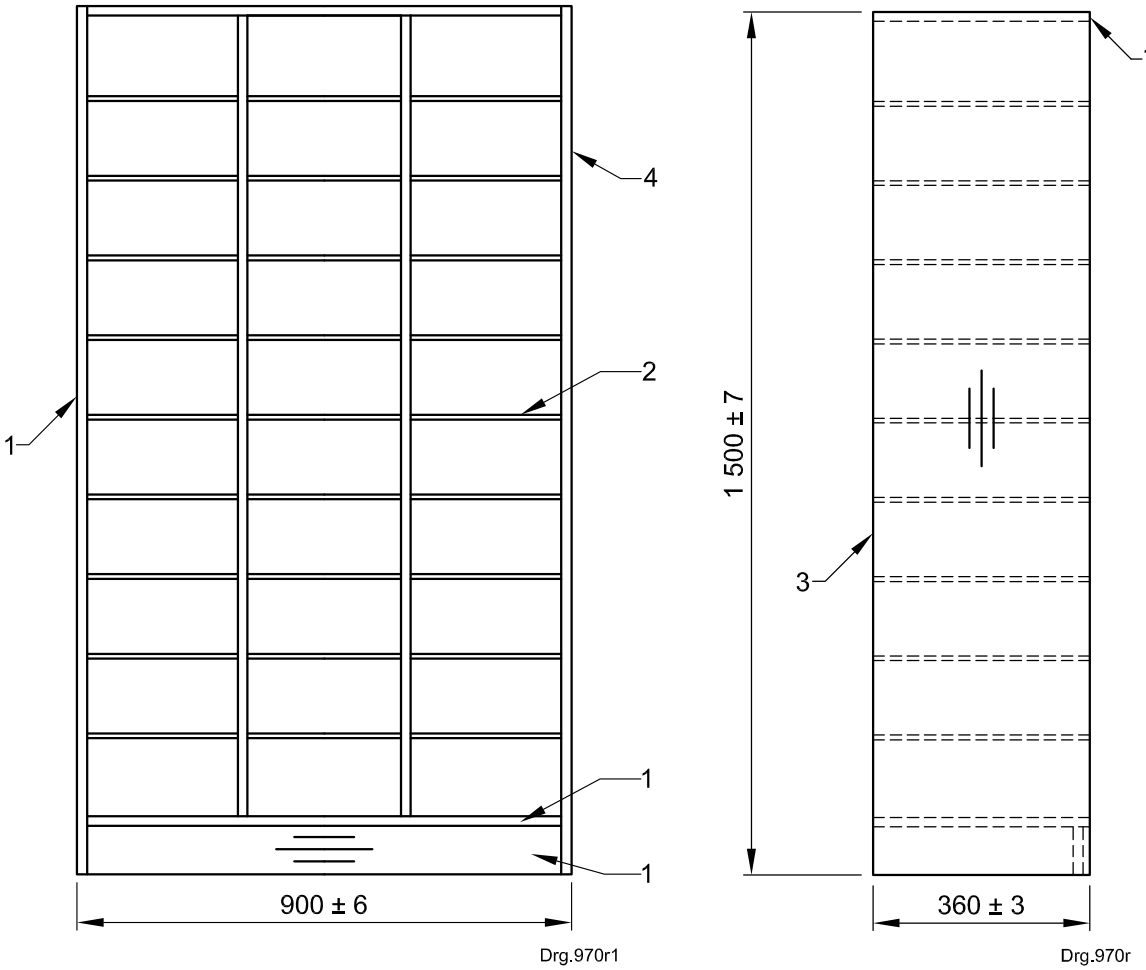

a) Front view **b) Side view**

Key

1 carcass (top, sides, bottom, division and kickplate)
2 shelf
3 back of pigeon hole
4 edging

The carcass shall be made from 16 mm double-sided melamine particle boards made from natural oak in accordance with SANS 929.

The 6,4 mm Masonite hardboard shelves shall be in accordance with SANS 540-1.

The back of the pigeon hole shall be made from 3,2 mm hardboard made from Masonite in accordance with SANS 540-1.

The pigeon hole edges shall be 1 mm thick

Figure C.13 — Pigeon hole — Oak melamine

Amdt 3

©SABS. Licensed exclusively to Stephen Shole; License ID : GCQZ-0O7J-H04C.
Copying and network storage prohibited.
You can make one paper copy of the standard; No paper copy may be photocopied or reproduced in any way.

Dimensions in millimetres

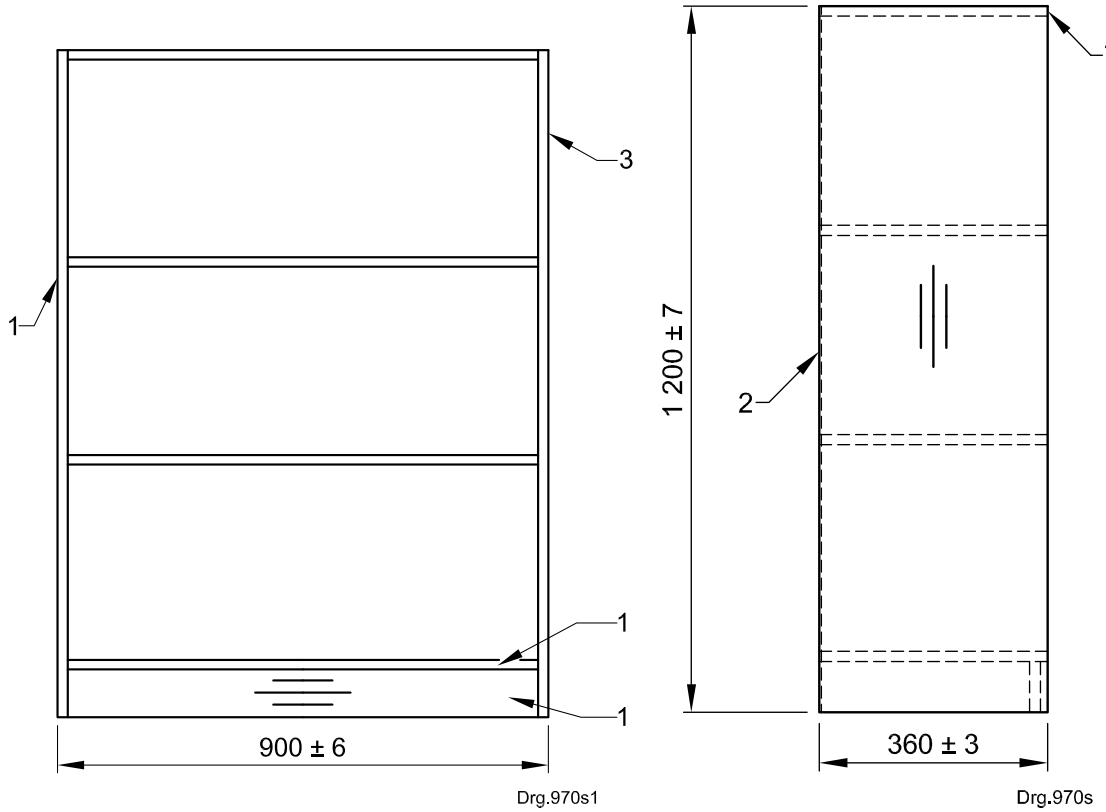

a) Front view **b) Side view**

Key

1 carcass (top, sides, bottom, division and kickplate)
2 back of shelving unit
3 edging

The carcass shall be made from 16 mm double-sided melamine particle boards made from natural oak in accordance with SANS 929.

The back of the shelving unit shall be made from 3,2 mm hardboard made from natural oak in accordance with SANS 540-1.

The shelving unit edges shall be 1 mm thick.

Figure C.14 — 1 200 mm shelving unit — Oak melamine

Amdt 3

©SABS. Licensed exclusively to Stephen Shole; License ID : GCQZ-0O7J-H04C.
Copying and network storage prohibited.
You can make one paper copy of the standard; No paper copy may be photocopied or reproduced in any way.

Dimensions in millimetres

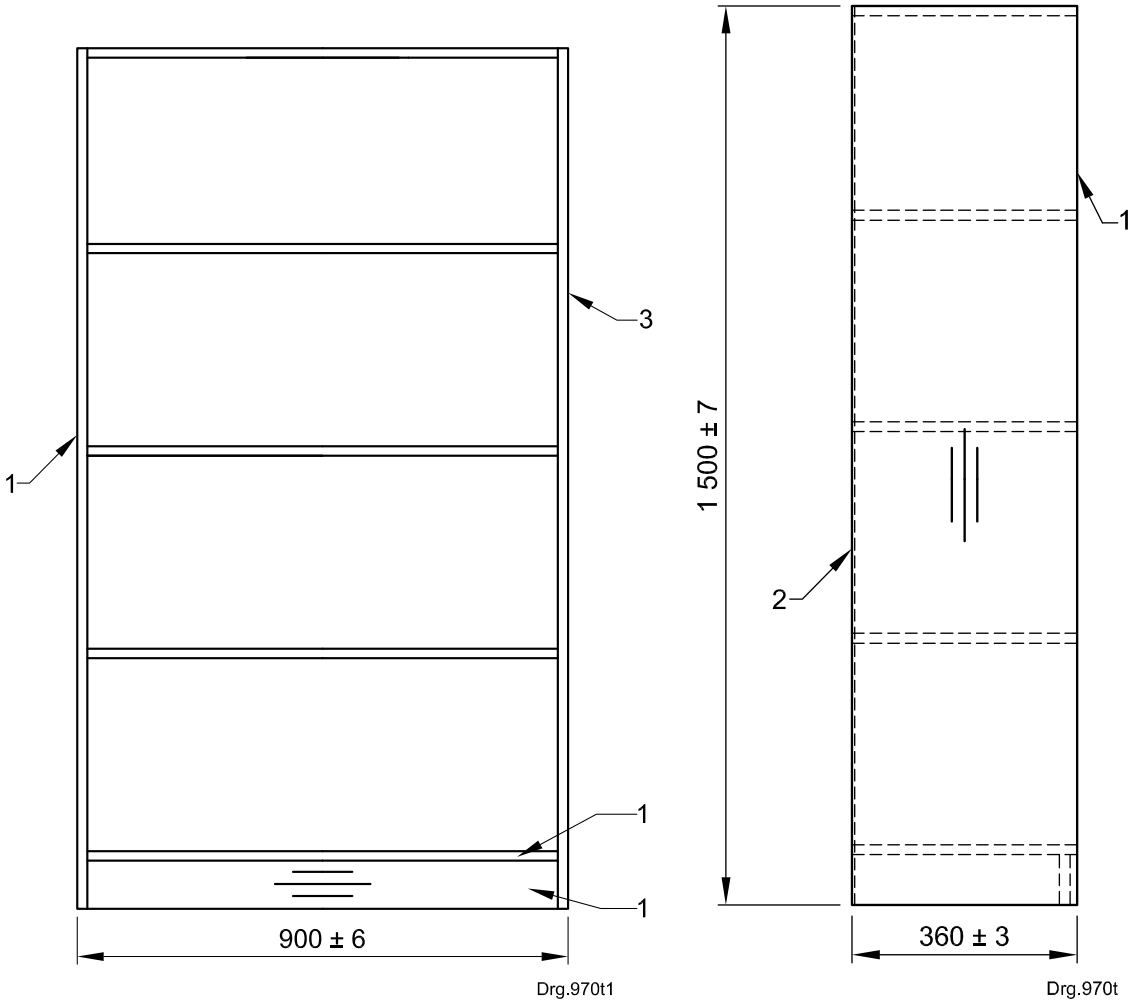

a) Front view **b) Side view**

Key

1 carcass (top, sides, bottom, division and kickplate)
2 back of shelving unit
3 edging

The carcass shall be made from 16 mm double-sided melamine particle boards made from natural oak in accordance with SANS 929.

The back of the shelving unit shall be made from 3,2 mm hardboard made from natural oak in accordance with SANS 540-1.

The shelving unit edges shall be 1 mm thick

Figure C.15 — 1 500 mm shelving unit — Oak melamine

Amdt 3

©SABS. Licensed exclusively to Stephen Shole; License ID : GCQZ-0O7J-H04C.
Copying and network storage prohibited.
You can make one paper copy of the standard; No paper copy may be photocopied or reproduced in any way.

Dimensions in millimetres

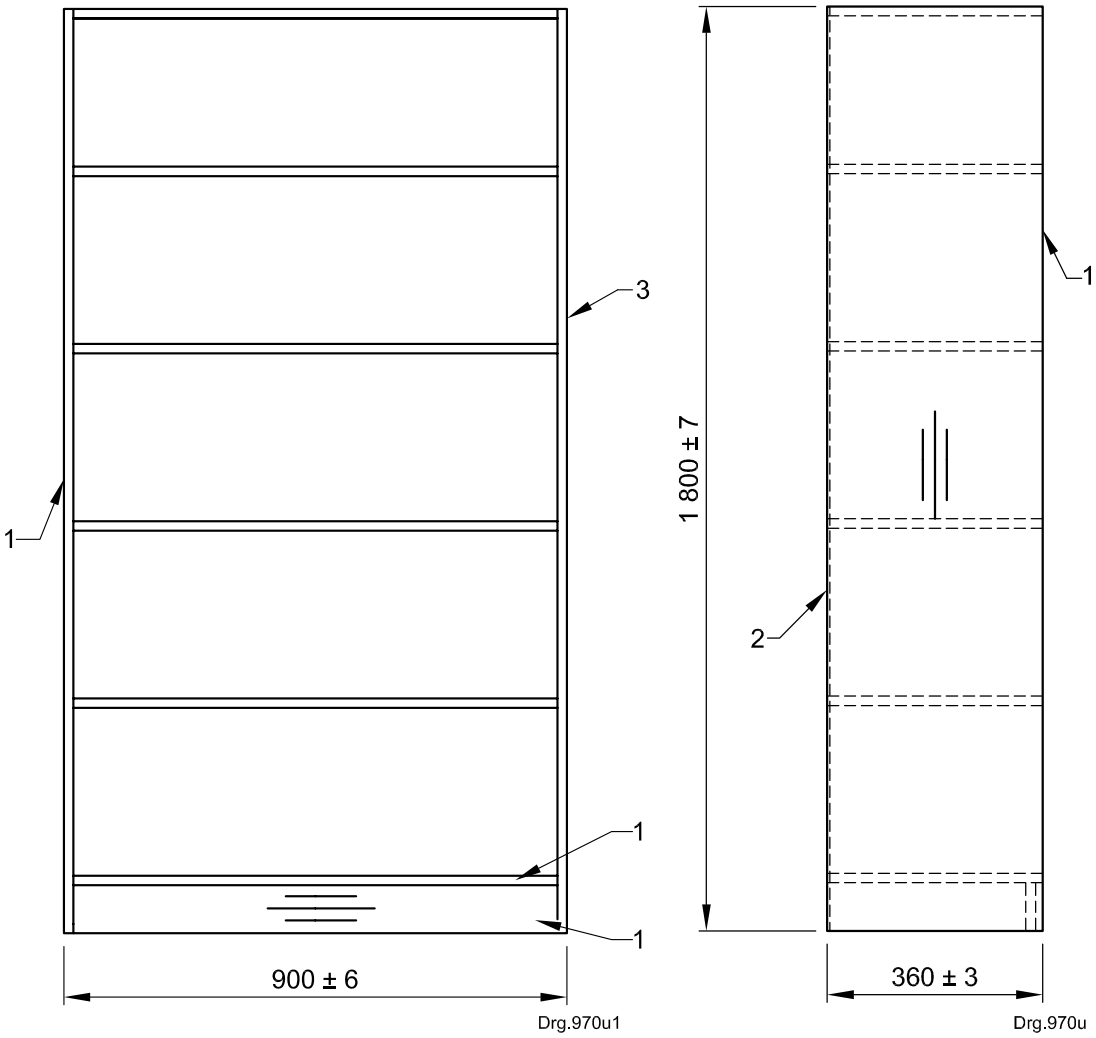

a) Front view **b) Side view**

Key

1 carcass (top, sides, bottom, division and kickplate)
2 back of shelving unit
3 edging

The carcass shall be made from 16 mm double-sided melamine particle boards made from natural oak in accordance with SANS 929.

The back of the shelving unit shall be made from 3,2 mm hardboard made from natural oak in accordance with SANS 540-1.

The shelving unit edges shall be 1 mm thick.

Figure C.16 — 1 800 mm shelving unit — Oak melamine

Amdt 3

©SABS. Licensed exclusively to Stephen Shole; License ID : GCQZ-0O7J-H04C.
Copying and network storage prohibited.
You can make one paper copy of the standard; No paper copy may be photocopied or reproduced in any way.

Dimensions in millimetres

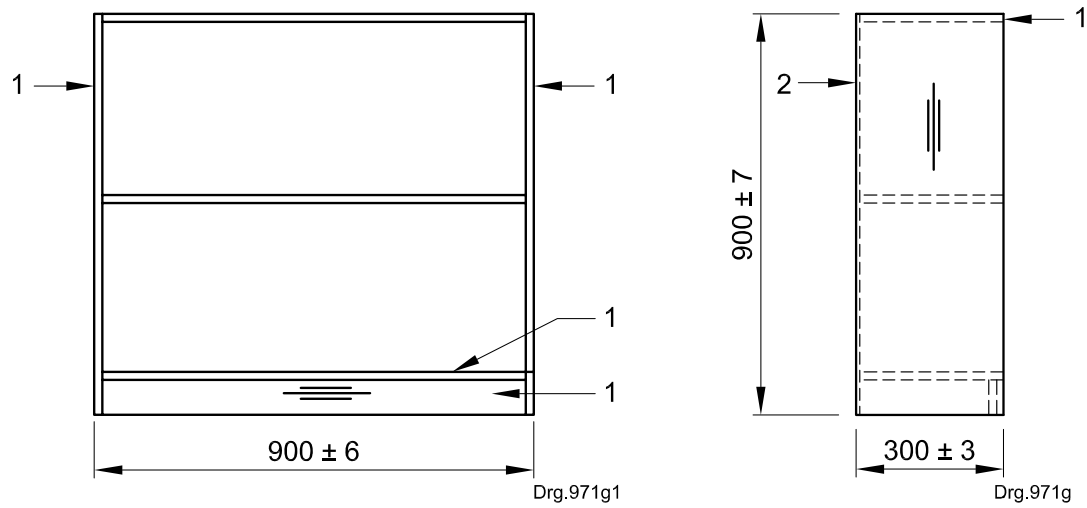

a) Front view **b) Side view**

Key

1 carcass (top, sides, bottom, division and kickplate)
2 back of shelving unit

The carcass shall be made from 21 mm solid *Saligna* hardwood made from *Eucalyptus grandis* in accordance with SANS 1460.

The back of the shelving unit shall be made from 3 mm medium density fibreboard in accordance with SANS 540-1.

Figure C.17 — 900 mm shelving unit — *Saligna*

Amdt 3

©SABS. Licensed exclusively to Stephen Shole; License ID : GCQZ-0O7J-H04C.
Copying and network storage prohibited.
You can make one paper copy of the standard; No paper copy may be photocopied or reproduced in any way.

Dimensions in millimetres

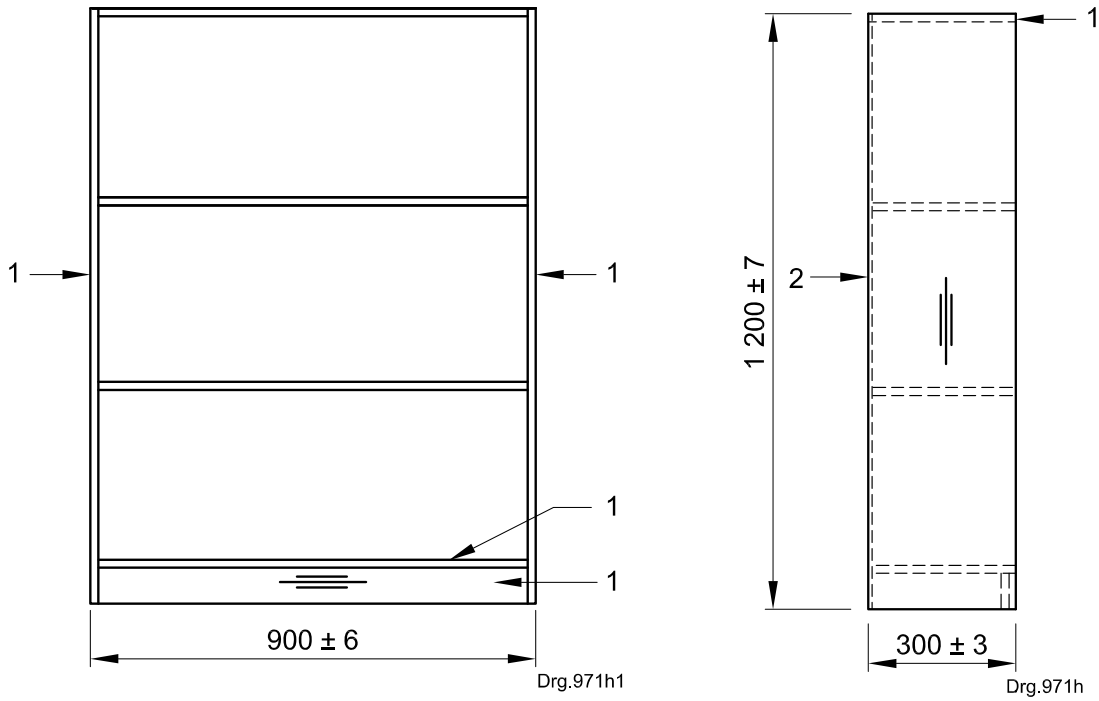

a) Front view **b) Side view**

Key

1 carcass (top, sides, bottom, division and kickplate)
2 back of shelving unit

The carcass shall be made from 21 mm solid *Saligna* hardwood made from *Eucalyptus grandis* in accordance with SANS 1460.

The back of the shelving unit shall be made from 3 mm medium density fibreboard in accordance with SANS 540-1.

Figure C.18 — 1 200 mm shelving unit — *Saligna*

Amdt 3

©SABS. Licensed exclusively to Stephen Shole; License ID : GCQZ-0O7J-H04C.
Copying and network storage prohibited.
You can make one paper copy of the standard; No paper copy may be photocopied or reproduced in any way.

Dimensions in millimetres

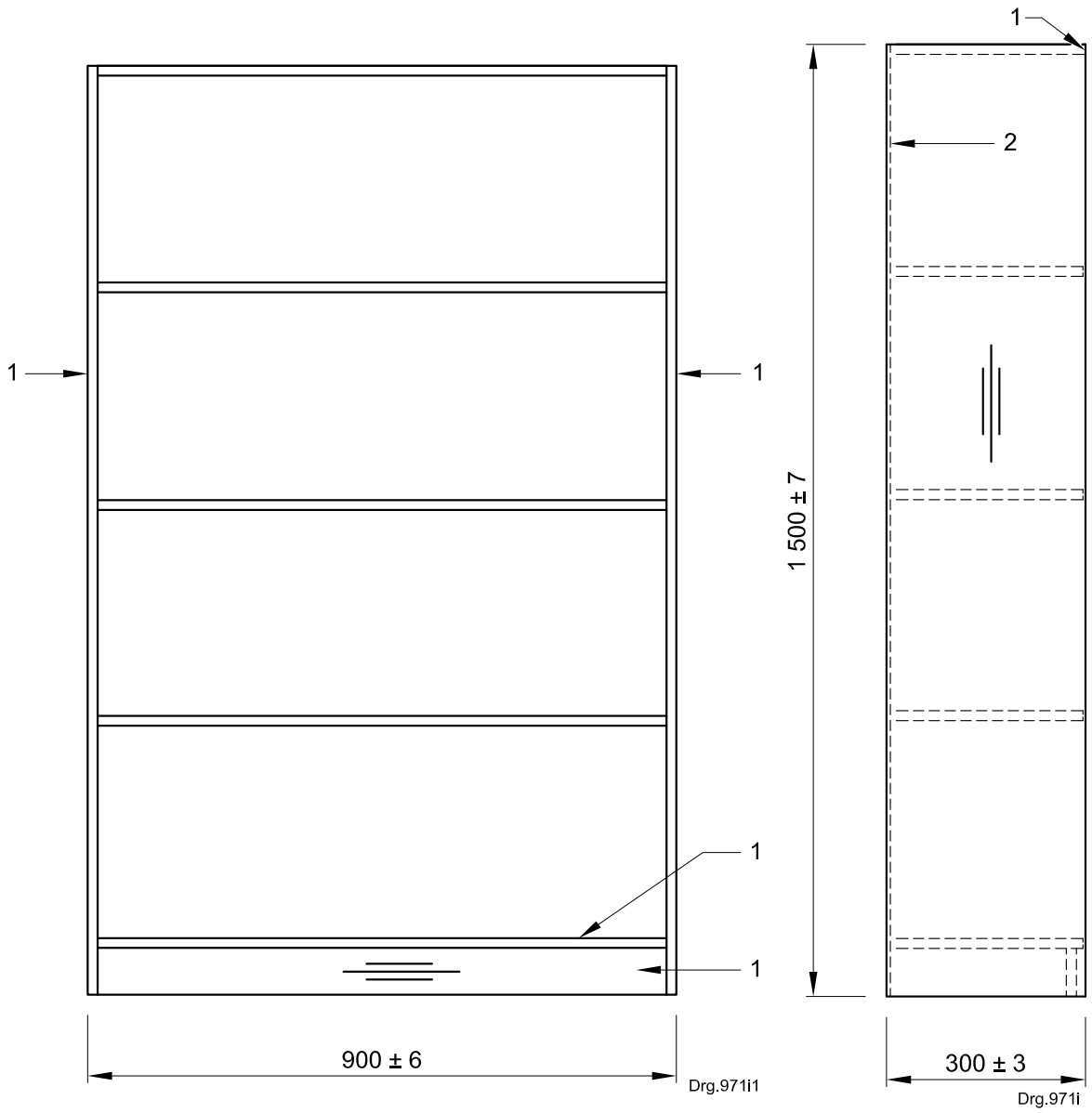

a) Front view **b) Side view**

Key

1 carcass
2 back of shelving unit

The carcass (top, sides, bottom, division and kickplate) shall be made from 21 mm solid *Saligna* hardwood made from *Eucalyptus grandis* in accordance with SANS 1460.

The back of the shelving unit shall be made from 3 mm medium density fibreboard in accordance with SANS 540-1.

Figure C.19 — 1 500 mm shelving unit— *Saligna*

Amdt 3

©SABS. Licensed exclusively to Stephen Shole; License ID : GCQZ-0O7J-H04C.
Copying and network storage prohibited.
You can make one paper copy of the standard; No paper copy may be photocopied or reproduced in any way.

Dimensions in millimetres

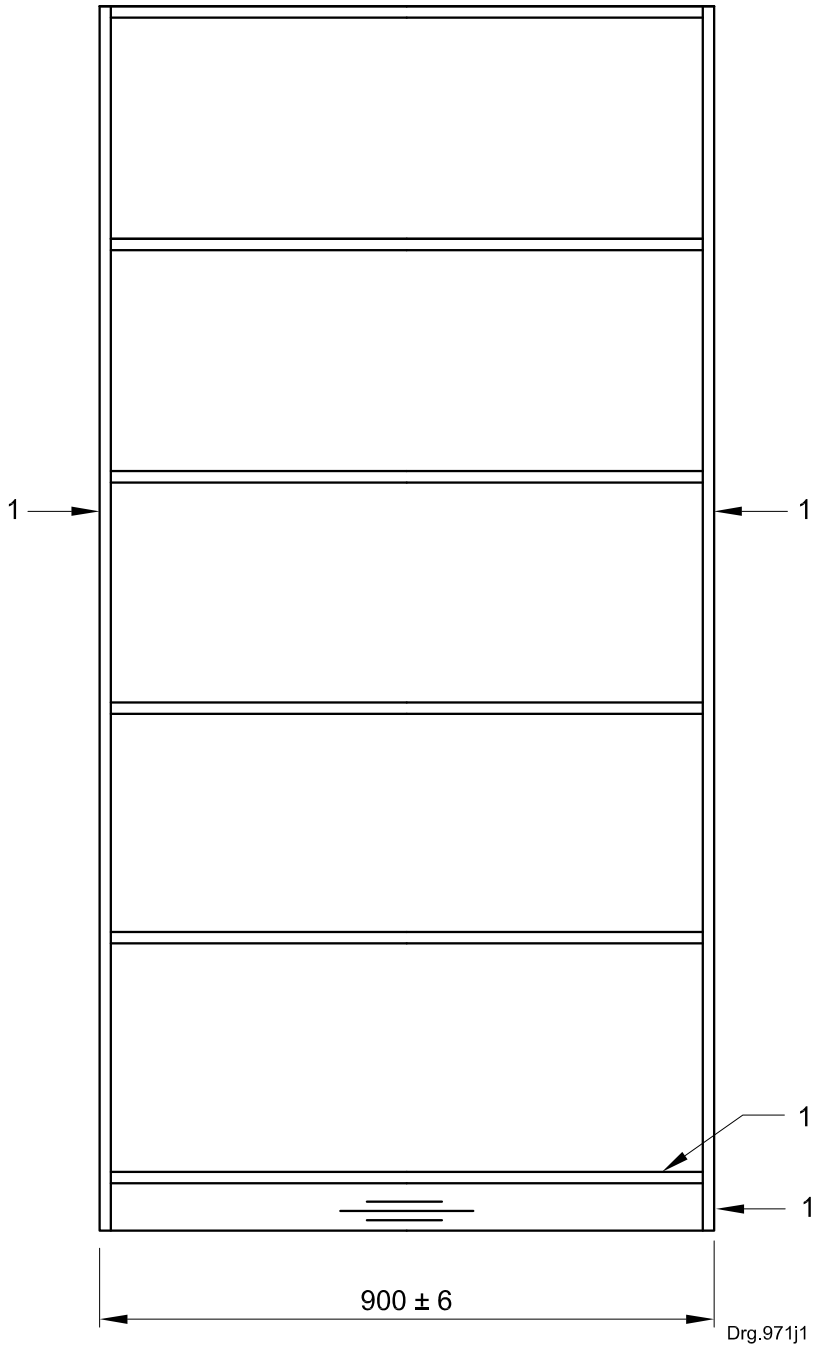

a) Front view

Key

1 carcass (top, sides, bottom, division and kickplate)
2 back of shelving unit

Figure C.20 — 1 800 mm shelving unit— *Saligna*

Amdt 3

© SABS

©SABS. Licensed exclusively to Stephen Shole; License ID : GCQZ-0O7J-H04C.
Copying and network storage prohibited.
You can make one paper copy of the standard; No paper copy may be photocopied or reproduced in any way.

Dimensions in millimetres

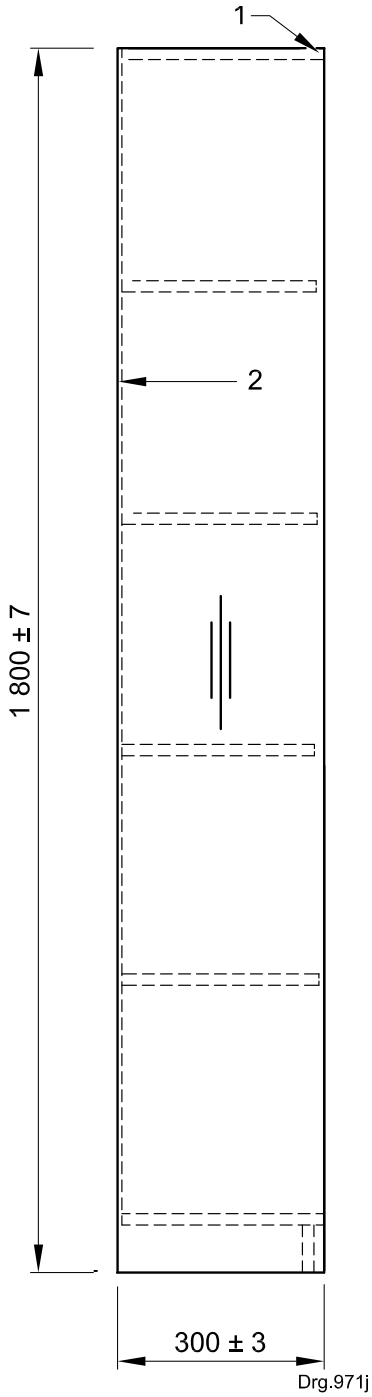

Key

1 carcass (top, sides, bottom, division and kickplate)
2 back of shelving unit

b) Side view

The carcass shall be made from 21 mm solid *Saligna* hardwood made from *Eucalyptus grandis* in accordance with SANS 1460.

The back of the shelving unit shall be made from 3 mm medium density fibreboard in accordance with SANS 540-1.

Figure C.20 — 1 800 mm shelving unit — *Saligna* *(concluded)*

Amdt 3

©SABS. Licensed exclusively to Stephen Shole; License ID : GCQZ-0O7J-H04C.
Copying and network storage prohibited.
You can make one paper copy of the standard; No paper copy may be photocopied or reproduced in any way.

Dimensions in millimetres

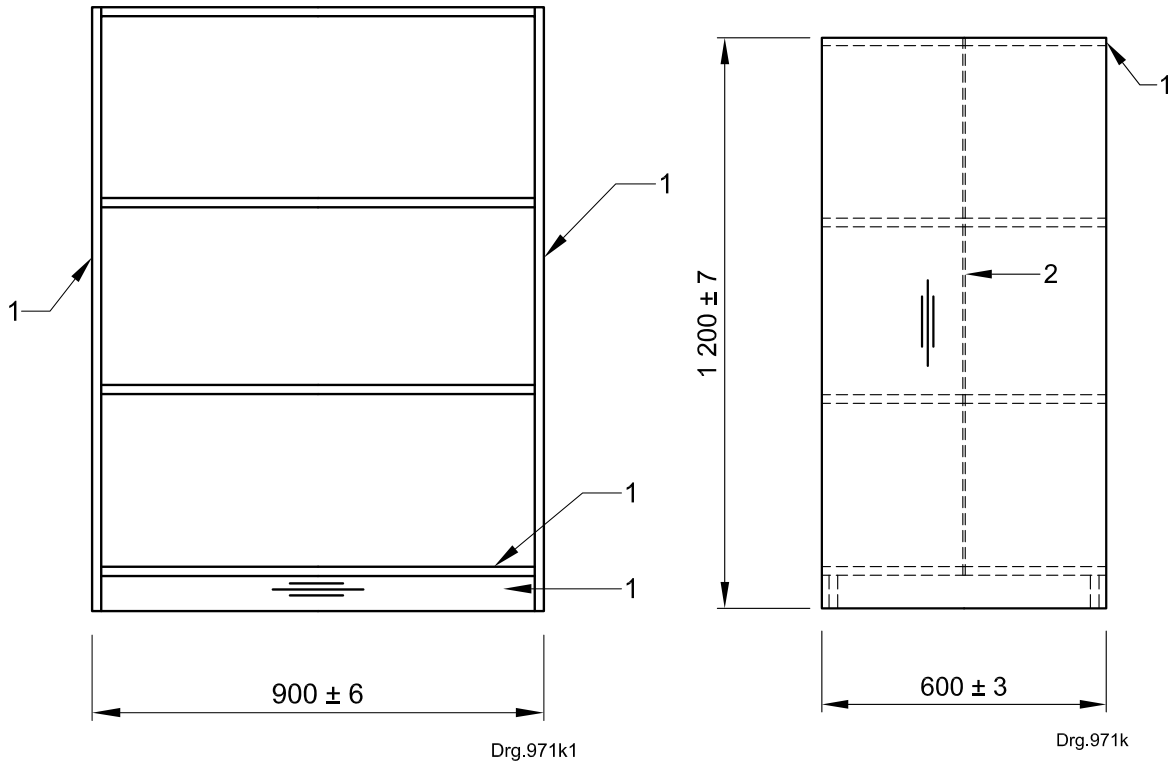

a) Front view **b) Side view**

Key

1 carcass (top, sides, bottom, division and kickplate)
2 back of shelving unit

The carcass shall be made from 21 mm solid *Saligna* hardwood made from *Eucalyptus grandis* in accordance with SANS 1460.

The back of the shelving unit shall be made from 3 mm medium density fibreboard made from Supawood fibre in accordance with SANS 540-1.

Figure C.21 — 1 200 mm double shelving unit — *Saligna*

Amdt 3

©SABS. Licensed exclusively to Stephen Shole; License ID : GCQZ-0O7J-H04C.
Copying and network storage prohibited.
You can make one paper copy of the standard; No paper copy may be photocopied or reproduced in any way.

Dimensions in millimetres

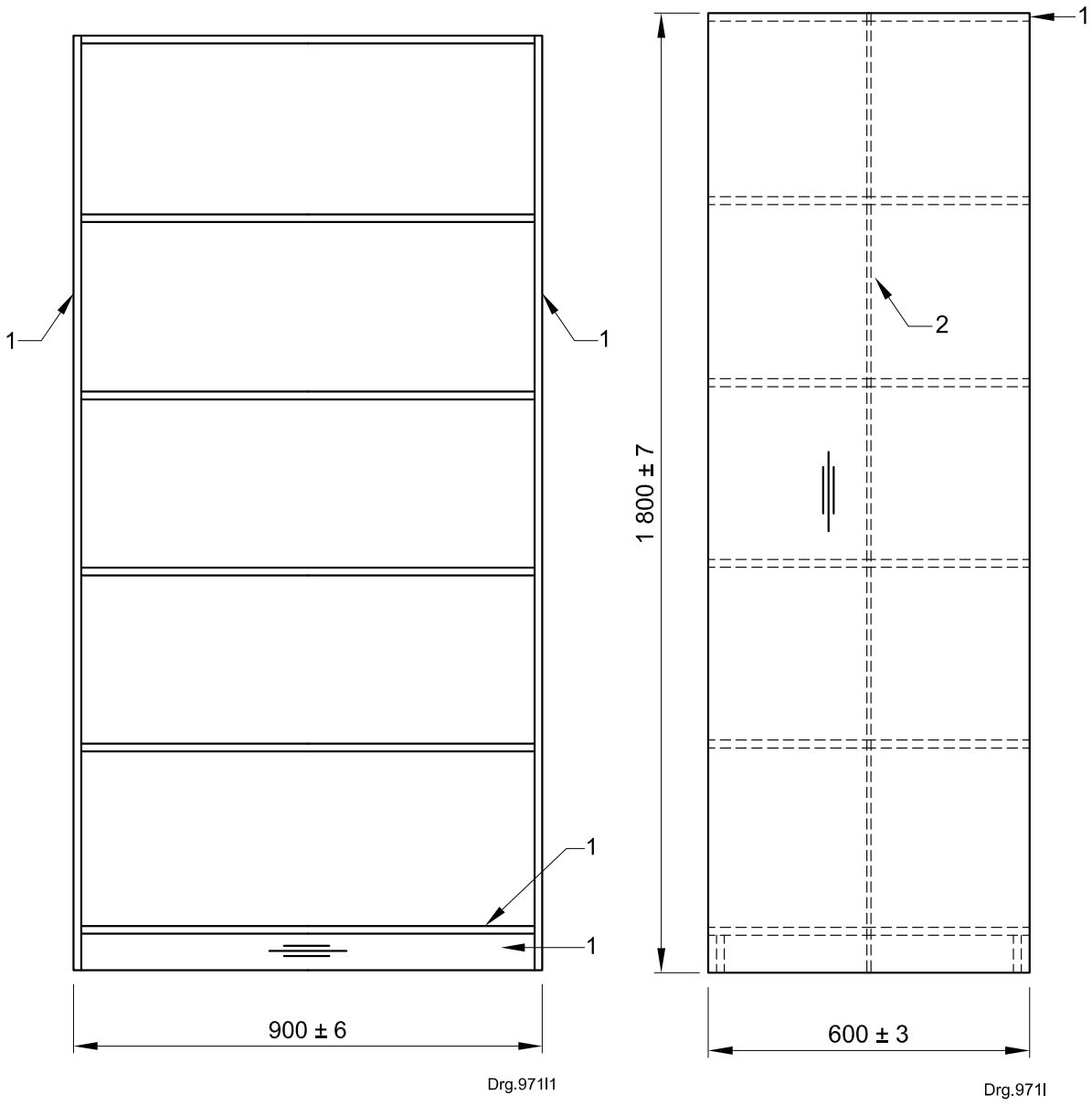

a) Front view **b) Side view**

Key

1 carcass (top, sides, bottom, division and kickplate)
2 back of shelving unit

The carcass shall be made from 21 mm solid *Saligna* hardwood made from *Eucalyptus grandis* in accordance with SANS 1460.

The back of the shelving unit shall be made from 3 mm medium density fibreboard made from Supawood fibre in accordance with SANS 540-1.

Figure C.22 — 1 800 mm double shelving unit — *Saligna*

Amdt 3

©SABS. Licensed exclusively to Stephen Shole; License ID : GCQZ-0O7J-H04C.
Copying and network storage prohibited.
You can make one paper copy of the standard; No paper copy may be photocopied or reproduced in any way.

Dimensions in millimetres

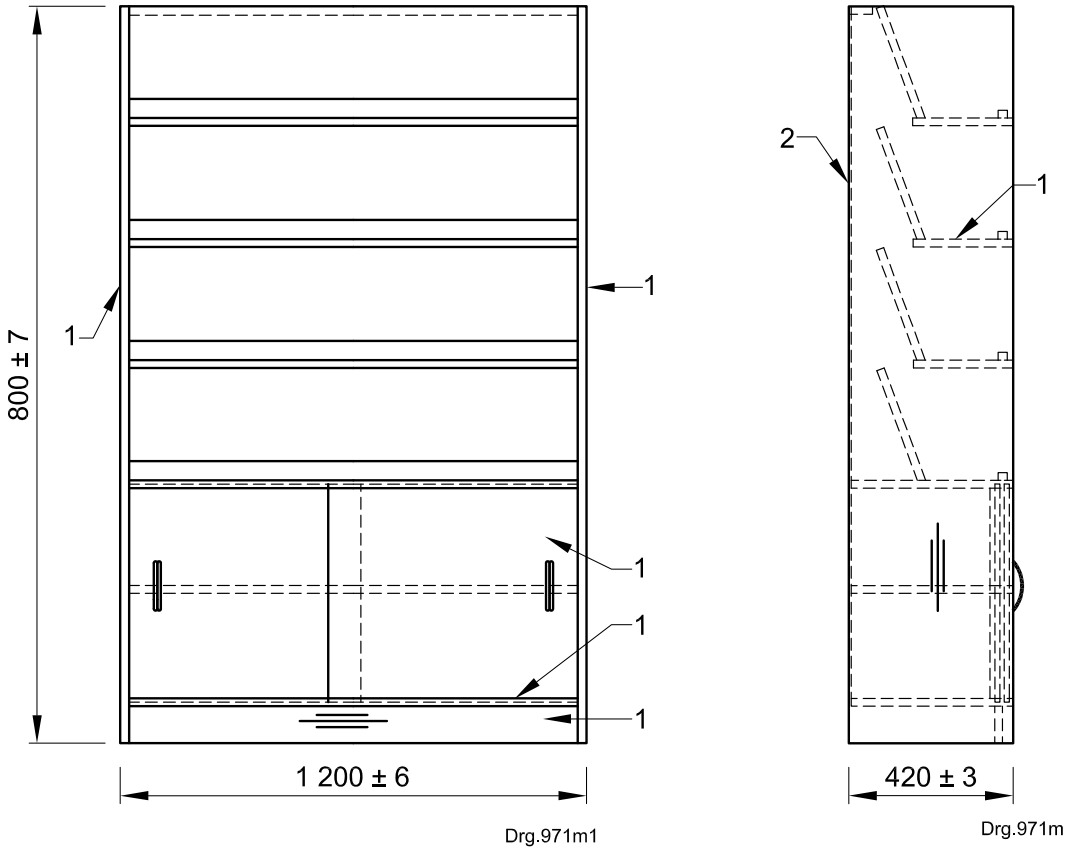

a) Front view **b) Side view**

Key

1 carcass (top, sides, bottom, division and kickplate)
2 back of cabinet

The carcass shall be made from 16 mm veneer board in accordance with SANS 929.

The back of the cabinet shall be made from 3,2 mm hardboard in accordance with SANS 540-1.

Figure C.23 — Catalogue cabinet — *Okoume*

Amdt 3

©SABS. Licensed exclusively to Stephen Shole; License ID : GCQZ-0O7J-H04C.
Copying and network storage prohibited.
You can make one paper copy of the standard; No paper copy may be photocopied or reproduced in any way.

Dimensions in millimetres

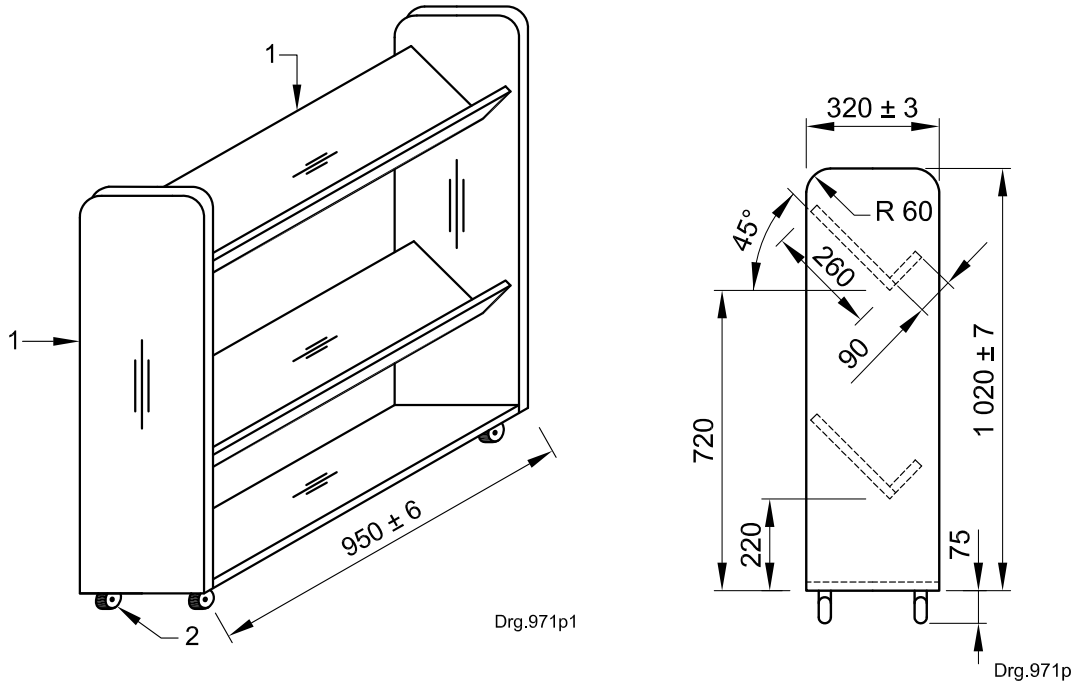

a) Isometric view **b) Side view**

Key

1 side and fixed shelf
2 swivel castor

The sides, bottom and fixed shelves shall be made from 21 mm solid hardwood made from *Eucalyptus grandis* in accordance with SANS 1460.

There shall be two swivel castors in accordance with SANS 929, and these shall be furnished with brakes.

Figure C.24 — Book trolley — *Saligna*

Amdt 3

©SABS. Licensed exclusively to Stephen Shole; License ID : GCQZ-0O7J-H04C.
Copying and network storage prohibited.
You can make one paper copy of the standard; No paper copy may be photocopied or reproduced in any way.

Bibliography **Amdt 3**

~~SABS 631, *Decorative oil gloss paint for interior and exterior use*~~. **Amdt 2**

~~SABS 782, *Primer for baking enamels*~~. **Amdt 2**

~~SABS 783, *Baking enamels*~~. **Amdt 2**

~~SABS 0202, *Colour marking for the identification of wrought steels commonly used in South Africa*~~. **Amdt 2**

~~SABS 1301, *Particle board: interior type (including ceiling board)*~~. **Amdt 2**

~~SABS 1359, *Softwood timber for industrial use*~~. **Amdt 2**

SANS 135/ISO 1456, *Metallic and other inorganic coatings – Electrodeposited coatings of nickel, nickel plus chromium, copper plus nickel and of copper plus nickel plus chromium.* **Amdt 2**

SANS 242, *Stainless steel sinks with draining boards (for domestic use)*.

SANS 540-2, *Fibreboard products – Part 2: Coated fibreboard.* **Amdt 2**

SANS 630, *Decorative high gloss enamel paints*.

SANS 657-4, *Steel tubes for non-pressure purposes – Part 4: Steel tubes of round, oval, square and rectangular section for furniture.*

SANS 678, *Primers for wood*.

SANS 681, *Undercoats for paints*.

SANS 820, *Mild steel nails*.

SANS 887, *Varnish for interior use*.

SANS 1099, *Hardwood furniture timber*.

SANS 1171, *Metal screws for wood*.

SANS 1324, *Upholstery fabrics*.

~~SANS 1349, *Phenolic, aminoplastic and one-part polyurethane resin adhesives for the laminating and finger-jointing of timber, and for furniture and joinery.*~~ **Amdt 3**

SANS 1407, *Anodized coatings on aluminium (for general applications)*.

SANS 1528-1, *Furniture – Part 1: Seating*.

SANS 1528-2, *Furniture – Part 2: Desks, tables and computer stands.*

SANS 1783-3, *Sawn softwood timber – Part 3: Industrial timber.* **Amdt 2**

SANS 4586-2/ISO 4586-2, *High-pressure decorative laminates – Sheets made from thermosetting resins – Part 2: Determination of properties.* **Amdt 2**

SANS 9001/ISO 9001, *Quality management systems – Requirements*. **Amdt 2**

SANS 50312/EN 312, *Particleboards – Specifications*. **Amdt 2**