©SABS. Licensed exclusively to Stephen Shole; License ID : DX2X-OOSR-N81Y.
Copying and network storage prohibited.
You can make one paper copy of the standard; No paper copy may be photocopied or reproduced in any way.

ISBN 978-0-626-37161-6

SANS 1528-2:2013

Edition 1.3

SOUTH AFRICAN NATIONAL STANDARD

Furniture

Part 2: Desks, tables and computer stands

Published by the South African Bureau of Standards
1 Dr Lategan Road Groenkloof ✉ Private Bag X191 Pretoria 0001
Tel: +27 12 428 7911 Fax: +27 12 344 1568
www.sabs.co.za
© SABS

©SABS. Licensed exclusively to Stephen Shole; License ID : DX2X-OOSR-N81Y.
Copying and network storage prohibited.
You can make one paper copy of the standard; No paper copy may be photocopied or reproduced in any way.

This page has been left blank intentionally

©SABS. Licensed exclusively to Stephen Shole; License ID : DX2X-OOSR-N81Y.
Copying and network storage prohibited.
You can make one paper copy of the standard; No paper copy may be photocopied or reproduced in any way.



COPYRIGHT PROTECTED DOCUMENT

© SABS

In terms of the Standards Act 8 of 2008, the copyright in all South African National Standards or any other publications published by the SABS Standards Division, vests in the SABS. Any use of South African National Standards is limited to use specifically prescribed by the SABS. In the case of a South African National Standard based on an international standard, ownership of the copyright vests in the organization from which the SABS adopted the standard, whether it be under licence or membership agreement. The SABS is obliged to protect such copyright and is authorized to make the relevant international organization aware of any misuse thereof. Unless exemption has been granted, no extract or full text of any South African National Standard may be copied, reproduced, stored in a retrieval system or transmitted in any form or by any means without prior written permission from the SABS Standards Division. This does not preclude the free use, in the course of implementing the standard, of necessary details such as symbols, and size, type or grade designations. If these details are to be used for any purpose other than implementation, prior written permission must be obtained.

Details, advice and limitations of use can be obtained from the Manager: Standards Sales and Information Services. Tel: +27 (0) 12 428 6883 email: sales@sabs.co.za

SABS – Standards Division

The objective of the SABS Standards Division is to develop, promote and maintain South African National Standards. This objective is incorporated in the Standards Act, 2008 (Act No. 8 of 2008).

The SABS continuously strives to improve the quality of its products and services and would therefore be grateful if anyone finding an inaccuracy or ambiguity while using this standard would inform the secretary of the technical committee responsible, the identity of which can be found in the foreword.

Buying Standards

Contact the Sales Office for South African and international standards, which are available in both electronic and hard copy format. Tel: +27 (0) 12 428 6883 email: sales@sabs.co.za

South African National Standards are also available online from the SABS Webstore www.store.sabs.co.za

Information on Standards

SABS Customer Services provide comprehensive standards-related information on national, regional and international standards. Tel: +27 (0) 12 428 7911 / 0861 27 7227 email: info@sabs.co.za

©SABS. Licensed exclusively to Stephen Shole; License ID : DX2X-OOSR-N81Y.
Copying and network storage prohibited.
You can make one paper copy of the standard; No paper copy may be photocopied or reproduced in any way.

SANS 1528-2:2013
Edition 1.3

Table of changes

Change No.	Date	Scope
Amdt 1	1996	Amended to add a new reference, a new definition, a note to the subclause that deals with materials, and additional requirements for glass used as table tops.
Amdt 2	2008	Amended to change the designation of SABS standards to SANS standards, to update the introductory paragraph to the normative references clause, to update the definition of "acceptable", and to update referenced standards.
Amdt 3	2013	Amended to include reference to a national department in the foreword, to update referenced standards, to add requirements for dimensions of office furniture and to correct numbering accordingly, to move the bibliography out of annex B to the end of the document and to correct cross-references accordingly, and to rename annex B as "Dimensions of office furniture".

Foreword

This South African standard was prepared by National Committee SABS/TC 136, *Furniture,* in accordance with procedures of the South African Bureau of Standards, in compliance with annex 3 of the WTO/TBT agreement.

This document was published in March 2013.

This document supersedes SANS 1528-2:2008 (edition 1.2).

A vertical line in the margin shows where the text has been technically modified by amendment No. 3.

Reference is made in annex B to the "relevant national department". In South Africa, this means the Forestry Stewardship Council. **Amdt 3**

SANS 1528 consists of the following parts, under the general title *Furniture:*

Part 1: Seating.

Part 2: Desks, tables and computer stands.

Part 3: Storage units.

Part 4: Bunk beds for domestic use.

Part 6: High chairs for domestic use.

Part 7: Children's cots for domestic use.

Annex B forms an integral part of this document. Annex A is for information only. **Amdt 3**

Compliance with this document cannot confer immunity from legal obligations.

Reaffirmed and reprinted in March 2019.
This document will be reviewed every five years and be reaffirmed, amended, revised or withdrawn.

© SABS

©SABS. Licensed exclusively to Stephen Shole; License ID : DX2X-OOSR-N81Y.
Copying and network storage prohibited.
You can make one paper copy of the standard; No paper copy may be photocopied or reproduced in any way.

Contents

Page

Foreword

1 Scope 3

2 Normative references 3

3 Definitions 4

4 Requirements 5

5 Marking 10

6 Inspection and methods of test 10

6.1 Inspection 10
6.2 Preparation of desk to be tested 11
6.3 Test for stability 11
6.4 Tests for strength 11

6.4.1 Vertical static load test 11
6.4.2 Horizontal static load test 12
6.4.3 Horizontal impact test 13
6.4.4 Drop test 15

6.5 Tests for durability 15

6.5.1 Horizontal durability test 15
6.5.2 Vertical durability test 16
6.5.3 Durability of adjustable parts 17

Annex A (informative) Quality verification of desks 18

Annex B (normative) Dimensions of office furniture 19
Amdt 3

Bibliography 42
Amdt 3

©SABS. Licensed exclusively to Stephen Shole; License ID : DX2X-OOSR-N81Y.
Copying and network storage prohibited.
You can make one paper copy of the standard; No paper copy may be photocopied or reproduced in any way.

This page is intentionally left blank

© SABS

©SABS. Licensed exclusively to Stephen Shole; License ID : DX2X-OOSR-N81Y.
Copying and network storage prohibited.
You can make one paper copy of the standard; No paper copy may be photocopied or reproduced in any way.

Furniture

Part 2:
Desks, tables and computer stands

1 Scope

This part of SANS 1528 specifies the characteristics of desks, tables and computer stands. It includes workstation furniture and covers items that are freestanding and items that are integrated into office partitions.

NOTE It is recommended that cognizance be taken of foreign standards when export of furniture is to be considered.

2 Normative references

The following referenced documents are indispensable for the application of this document. For dated references, only the edition cited applies. For undated references, the latest edition of the referenced document (including any amendments) applies. Information on currently valid national and international standards can be obtained from the South African Bureau of Standards. **Amdt 2**

BS 3962-6, *Methods of test for finishes for wooden furniture – Part 6: Assessment of resistance to mechanical damage.* **Amdt 2**

~~BS 6250-2, *Domestic and contract furniture – Part 2: Specification for performance requirements for tables and trolleys.*~~ **Amdt 2**

EN 15186, *Furniture – Assessment of the surface resistance to scratching.* **Amdt 3**

SANS 657-4, *Steel tubes for non-pressure purposes – Part 4: Steel tubes of round, oval, square and rectangular section for furniture.* **Amdt 3**

SANS 929, *Plywood and composite board.* **Amdt 3**

SANS 1263-1, *Safety and security glazing materials for buildings – Part 1: Safety performance of glazing materials under human impact.* **Amdt 1**

SANS 1274, *Coatings applied by the powder-coating process.* **Amdt 3**

SANS 1460, *Laminated timber (glulam).* **Amdt 3**

SANS 1528-3, *Furniture – Part 3: Storage units.*

©SABS. Licensed exclusively to Stephen Shole; License ID : DX2X-OOSR-N81Y.
Copying and network storage prohibited.
You can make one paper copy of the standard; No paper copy may be photocopied or reproduced in any way.

3 Definitions

For the purposes of this part of SANS 1528, the following definitions apply:

3.1
acceptable
acceptable to the authority administering this standard, or to the parties concluding the purchase contract, as relevant **Amdt 2**

3.2
ancillary worksurface
worksurface other than the main worksurface of a desk and that includes components such as leaves, flaps and keyboard surfaces

3.3
annealed glass
glass that has been heated at the annealing temperature (to remove internal stresses) and cooled under controlled conditions

3.4
desk
generic term that includes desks, tables and computer stands

3.5
film-backed glass
glass to which a plastics film has been applied

NOTE The worksurface of film-backed glass is the glass surface.

3.6
laminated glass
two or more layers of glass permanently bonded together by one or more interlayers of plastics material

3.7
main worksurface
largest worksurface of a desk, which is usually horizontal

3.8
support lands
horizontal surface upon which glass rests and by which it is supported

3.9
surface finish
external wear surface of a desk, which includes the following:

a) paint or lacquer applied to timber or timber-based products;

b) PVC, paint, paper foil or plastics laminates; and

c) material that has an integral finish

3.10
toughened glass
single layer of glass that has been subjected to special treatment to increase its mechanical strength and to ensure fragmentation when broken **Amdt 1**

© SABS

©SABS. Licensed exclusively to Stephen Shole; License ID : DX2X-OOSR-N81Y.
Copying and network storage prohibited.
You can make one paper copy of the standard; No paper copy may be photocopied or reproduced in any way.

4 Requirements

4.1 Materials and hazards

4.1.1 Dimensions

The dimensions of office furniture shall be in accordance with annex B. **Amdt 3**

4.1.2 Materials **Amdt 3**

The following materials used in the construction of a desk shall comply with the relevant requirements of applicable South African National Standards (see also bibliography): **Amdt 3**

– timber and timber derivatives;

– metal;

– paint;

– powder coatings;

– varnish;

– nickel/chromium coatings; and

– high-pressure decorative laminates.

If there is no applicable South African National Standard, the specification with which the material complies shall be such as to be acceptable.

NOTE Requirements for desks that include glass in their construction are given in 4.8. **Amdt 1**

4.1.3 Hazards **Amdt 3**

A desk shall be so constructed that

a) movable and adjustable parts cannot cause injuries and cannot be unintentionally removed,

b) there are no holes or openings such as open-ended tubes or crevices or loose washers in which fingers or flesh could become trapped or injured,

c) all corners, edges and projecting parts are sufficiently smooth not to be capable of causing a wound or an abrasion or damage to clothing, and

d) any lubricated parts are so protected that the clothing of a user of a desk cannot come into contact with the lubricant.

4.2 Surface finish

4.2.1 Appearance

All surfaces shall be free of warp. The appearance of all surface finishes shall be such as to be acceptable.

NOTE Worksurfaces where people will, as part of their work, be writing, should have a matt finish (to reduce reflections) but should be smooth enough to allow a person to write with a ballpoint pen on a single sheet of bond paper without the texture of the worksurface affecting the writing.

©SABS. Licensed exclusively to Stephen Shole; License ID : DX2X-OOSR-N81Y.
Copying and network storage prohibited.
You can make one paper copy of the standard; No paper copy may be photocopied or reproduced in any way.

4.2.2 Performance

Surface finishes shall comply with the performance ratings given in BS 3962-6 and EN 15186.
Amdt 2; amdt 3

4.3 Stability

4.3.1 When a desk is placed on a level concrete floor and hand pressure is applied to any part of the desk, the desk shall not rock.

4.3.2 If a desk is fitted with levelling devices, each device shall be adjustable over a range of at least 25 mm.

4.3.3 Desks that have storage areas (such as drawers) shall comply with the relevant requirements for stability given in SANS 1528-3.

4.3.4 When a desk is tested in accordance with 6.3, it shall not overbalance, and any ancillary worksurface shall not tip. If a desk that includes glass in its construction has to have the glass component(s) in position in order to comply with this requirement, the glass component(s) shall be safety glass.

NOTE If the glass in a desk is broken and is removed by the user, the consequent reduction in mass may cause the desk to be unstable.

4.3.5 If a desk is equipped with castors, the following shall apply:

a) the type of castor shall be appropriate to the end use envisaged, for example, it shall be suited to a specific floor covering such as a carpet; and

b) the castor size in relation to the end use envisaged shall be relevant to the gross mass of the desk.

4.4 Strength and durability

4.4.1 Desks that have storage areas (such as drawers) shall comply with the relevant requirements for strength and durability given in SANS 1528-3.

4.4.2 When a desk is tested in accordance with 6.4 and 6.5, there shall be

a) no fracture or cracking of any member, component or joint,

b) no loosening of joints intended to be rigid,

c) no free movement of any component that exceeds the free movement noted in the initial inspection (see 6.2.2),

d) no deformation or wear of any part or component that will significantly affect the desk's function,

e) no clearly audible noise developed during testing,

f) no deterioration of the operation of any movable or adjustable parts, and

g) no permanent deflection of a work surface that exceeds

– span/250 (for particle board),

© SABS

©SABS. Licensed exclusively to Stephen Shole; License ID : DX2X-OOSR-N81Y.
Copying and network storage prohibited.
You can make one paper copy of the standard; No paper copy may be photocopied or reproduced in any way.

– span/150 (for timber), or

– span/100 (for other materials).

4.5 Ergonomics

NOTE Incorrect seating of workers contributes to fatigue and consequent inefficiency. The following requirements apply to desks but, to ensure that fatigue is minimized, the ergonomics of the desk and the seating with which it is intended to be used should be considered together. (See SANS 1528-1.)

The dimensions of a desk shall conform to the values given in figure 1. The dimensions of drawers and other storage areas shall be as given in SANS 1528-3.

4.6 Cable management

Desks that include cable management facilities shall be so constructed that

– gaps through which cables pass have a clear opening of at least 10 mm, and

– it is not possible to damage the sheath of a cable by pulling the cable across any part of the trunking in which it runs.

4.7 Ironmongery

Any ironmongery on a desk shall comply with the relevant requirements of SANS 1528-3.

©SABS. Licensed exclusively to Stephen Shole; License ID : DX2X-OOSR-N81Y.
Copying and network storage prohibited.
You can make one paper copy of the standard; No paper copy may be photocopied or reproduced in any way.

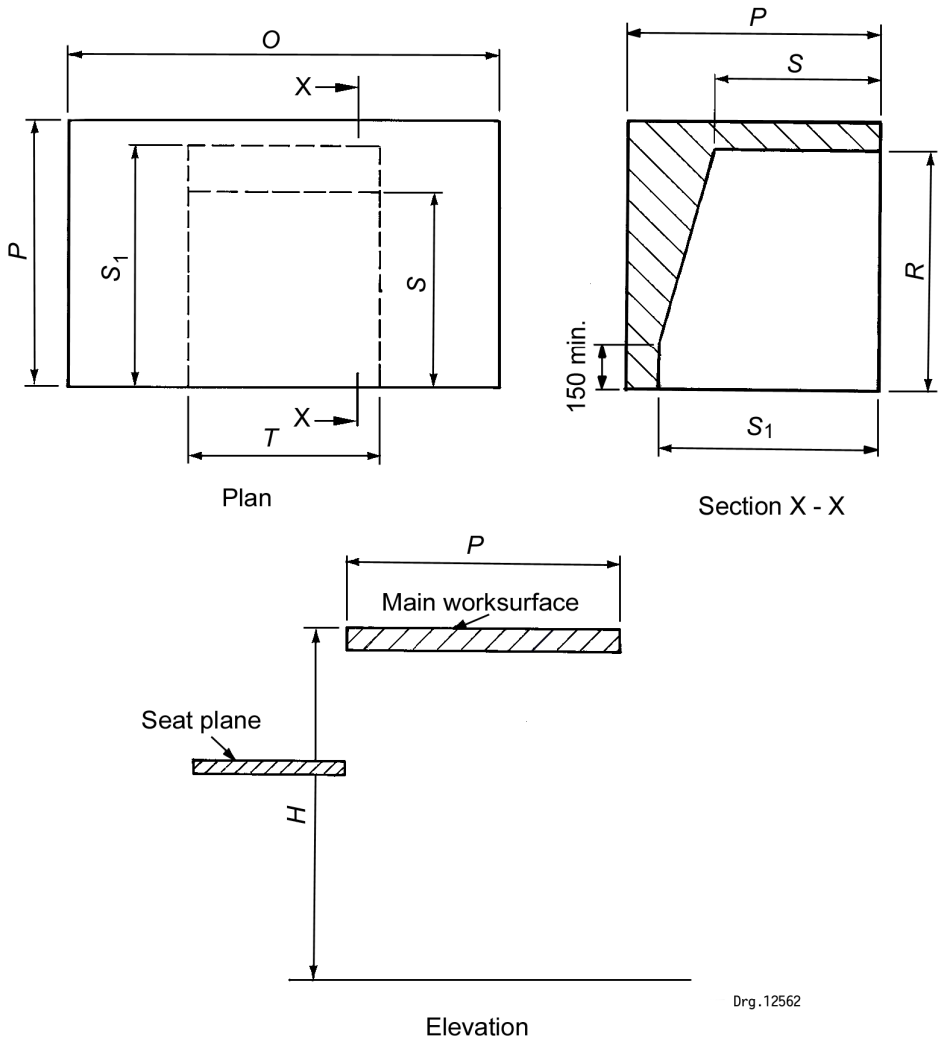

Dimensions in millimetres

1	2	3
Dimension	**Desk and tables**	**Computer stands**
H Height of top surface:		
Fixed height top	720 ± 10	670 ± 10
Adjustable height top, recommended		
Adjustment range	670 to 770	610 to 720
Leg room		
R Clearance below desktop, min.:		
Fixed height top	650	620
Adjustable height top	620	580
T Clearance across the kneehold, min.	580	580
S Leg room, front to back, min.	450	450
S_1 Leg room, front to back, min.	600	600
P Width of top surface, min.	600	600
O Length of top surface	1 200	1 200

Figure 1 — Dimensions of desk

© SABS

©SABS. Licensed exclusively to Stephen Shole; License ID : DX2X-OOSR-N81Y.
Copying and network storage prohibited.
You can make one paper copy of the standard; No paper copy may be photocopied or reproduced in any way.

4.8 Additional requirements for desks that include glass in their construction

4.8.1 Edges

All edges of glass shall be smooth. The edges of laminated or film-backed glass shall be protected from moisture.

4.8.2 Support

4.8.2.1 Desks that use support lands (see 3.8) shall be so constructed that when the glass is moved to its extreme positions, it still overlaps the lands by at least 6 mm.

4.8.2.2 Annealed glass of rectangular shape shall be continuously supported within 100 mm of both long edges. Annealed glass of other shapes shall be supported within 100 mm of its edge along at least 50 % of its edge.

4.8.2.3 If glass is supported by point supports, the area of these supports shall each be at least 36 mm^2.

4.8.2.4 There shall be no metal-to-glass or glass-to-glass contact.

4.8.2.5 Glass that is not supported over its entire area shall comply with the requirements of SANS 1263-1 and shall be of the relevant nominal thickness given in table 1. Glass that is supported over its entire area shall be of the relevant nominal thickness given in table 2. **Amdt 1**

Table 1 — Nominal thickness of glass that is not supported over its entire area

1	2	3	4
Area of glass	**Nominal thickness** mm		
m^2	**Toughened glass**	**Laminated glass**	**Annealed glass**
≤ 0,25	≥ 4,0	≥ 6,0	≥ 10,0
> 0,25 to ≤ 0,50	≥ 5,0	≥ 6,0	≥ 10,0
> 0,50 to ≤ 0,75	≥ 6,0	≥ 6,0	≥ 12,0
> 0,75 to ≤ 1,50	≥ 8,0	≥ 8,0	≥ 15,0
> 1,50	≥ 10,0	≥ 10,0	≥ 19,0

Amdt 1

Table 2 — Nominal thickness of glass that is supported over its entire area

1	2	3	4	5
Area of glass	**Nominal thickness** mm			
m^2	**Annealed glass**	**Toughened glass**	**Laminated glass**	**Film-backed glass**
≤ 0,5	≥ 4,0	≥ 4,0	≥ 4,0	≥ 4,0
> 0,5 to ≤ 1,0	≥ 5,0	≥ 4,0	≥ 4,0	≥ 4,0
> 1,0 to ≤ 1,5	≥ 6,0	≥ 4,0	≥ 4,0	≥ 4,0
> 1,5	*	≥ 4,0	≥ 4,0	*
* Not applicable or not permitted.				

Amdt 1

©SABS. Licensed exclusively to Stephen Shole; License ID : DX2X-OOSR-N81Y.
Copying and network storage prohibited.
You can make one paper copy of the standard; No paper copy may be photocopied or reproduced in any way.

5 Marking

5.1 Adhesive label

Each desk shall bear the following information on a durable and legible adhesive label stuck to the underside of the desk:

a) the manufacturer's name, trade name or trade mark;

b) the model identification number; and

c) the batch identification number.

5.2 Data sheet

Each desk shall have an accompanying data sheet. The information on the sheet shall be printed in the largest typeface practicable and expressed as simply as possible. The following information shall be given:

a) the manufacturer's name, trade name or trade mark;

b) the model identification and the batch identification;

c) a list of the materials used in the manufacture of the desk that comply with the requirements of South African National Standards together with a list of the relevant South African National Standards (see also (d) below);

d) a separate list of the materials used in the manufacture of the desk that do not comply with the requirements of a South African National Standard, together with the full identification of the standard or specification with which they do comply; and

e) if the desk is to be assembled by the purchaser, full instructions (including diagrams) indicating exactly how the desk is to be assembled.

5.3 Care and maintenance

The following information (which may be given on an adhesive label or on the data sheet or on a separate information sheet) should be provided to enable the end user to keep the desk in a clean and serviceable condition:

a) if the use of certain cleaning materials could cause permanent damage to the desk, a warning to this effect, and the action to be taken to avoid this possibility;

b) the recommended method of cleaning exposed surfaces;

c) the correct methods to be used for major cleaning operations; and

d) any recommended maintenance procedures.

NOTE Glass may be cleaned with a mixture of ammonia and white chalk. **Amdt 1**

6 Inspection and methods of test

6.1 Inspection

Visually examine each desk for compliance with the requirements of this part of SANS 1528 for which tests to assess compliance are not given in 6.3 to 6.5 inclusive.

© SABS

©SABS. Licensed exclusively to Stephen Shole; License ID : DX2X-OOSR-N81Y.
Copying and network storage prohibited.
You can make one paper copy of the standard; No paper copy may be photocopied or reproduced in any way.

6.2 Preparation of desk to be tested

NOTE Since adhesives need time to achieve their full strength, do not test a desk immediately after manufacture.

6.2.1 Prepare the desk as follows:

a) if relevant, assemble any desk in accordance with the manufacturer's instructions. If the desk can be assembled in more than one way, assemble it in the most adverse way for testing (see 5.2(e)); and

b) if the desk is adjustable in any way, adjust it to the most adverse position for testing.

6.2.2 Before testing, carefully so inspect the desk that, after testing, compliance with the requirements of 4.4.2 can be assessed.

6.3 Test for stability

6.3.1 Apparatus

6.3.1.1 Means of applying vertical forces of 1 250 N and 160 N to a loading pad (see 6.3.1.2).

6.3.1.2 Loading pad of size 75 mm × 75 mm, of hard smooth material and that has rounded edges.

6.3.1.3 Stops designed to prevent the desk under test from sliding but not from tilting. The height of the stops is the lowest that can be used to prevent sliding.

6.3.2 Procedure

6.3.2.1 If the desk is fitted with levelling devices, so adjust them that they are in approximately the mid-range of adjustment and the desk does not rock, and check for compliance with 4.3.1 and 4.3.2.

6.3.2.2 So position the desk that the legs on its longest side are against the stops (see 6.3.1.3).

6.3.2.3 Using the loading pad, apply the force of 1 250 N to any point along the long edge of the main worksurface of the desk at a distance of 50 mm from the edge of the desk.

6.3.2.4 Repeat 6.3.2.3 along the short side of the desk.

6.3.2.5 Using the loading pad, apply the force of 160 N within 50 mm of the edge of any ancillary worksurface.

6.3.2.6 Check for compliance with 4.3.4.

6.4 Tests for strength

6.4.1 Vertical static load test

6.4.1.1 Apparatus

6.4.1.1.1 Loading pad of size 75 mm × 75 mm of hard smooth material and that has rounded edges.

6.4.1.1.2 Means of applying vertical forces of 1 250 N and 500 N.

©SABS. Licensed exclusively to Stephen Shole; License ID : DX2X-OOSR-N81Y.
Copying and network storage prohibited.
You can make one paper copy of the standard; No paper copy may be photocopied or reproduced in any way.

6.4.1.1.3 Means of measuring the vertical deflection of the worksurface of the desk under test.

6.4.1.1.4 Means of applying a uniformly distributed load of 2 kg/dm^2 to the entire worksurface of the desk under test.

6.4.1.2 Procedure

6.4.1.2.1 Select a maximum of three potentially weak points on the main worksurface of the desk.

6.4.1.2.2 Using the loading pad, apply the force of 1 250 N to each of the selected points 10 times, applying the force for 10 s each time. Measure the deflection of the worksurface at each point during the first and the last applications of the force.

6.4.1.2.3 Using the loading pad, apply the force of 500 N to the edge of any ancillary worksurface 10 times, applying the force for 10 s each time. Measure the deflection of the ancillary worksurface during the first and the last applications of the force.

6.4.1.2.4 If the deflections measured above exceed

– span/250 (for particle board),

– span/150 (for wood), or

– span/100 (for other materials),

subject the main worksurface or ancillary worksurface (or both) to the uniformly distributed load given in 6.4.1.1.4 for a period of 7 d. After 7 d, measure the deflection of the worksurface, and check for compliance with 4.4.2.

6.4.2 Horizontal static load test

6.4.2.1 Apparatus

6.4.2.1.1 Stops designed to prevent the desk under test from sliding but not from tilting. The height of the stops is the lowest that can be used to prevent sliding.

6.4.2.1.2 Loading pad of size 75 mm × 75 mm of hard smooth material and that has rounded edges.

6.4.2.1.3 Means of applying a horizontal force of 600 N to the edge of the desk under test.

6.4.2.1.4 Masspieces to apply a uniformly distributed load of up to but not exceeding 100 kg.

6.4.2.1.5 Means of measuring the horizontal deflection of the desk under test.

6.4.2.2 Procedure

6.4.2.2.1 So place the desk that legs 1 and 2 (see figure 2) are between the stops. If the desk is mobile, place the castors or glides between the stops.

6.4.2.2.2 Using the loading pad, apply the force of 600 N to point A on the edge of the desk for 10 s and measure the deflection *e* (see figure 2).

6.4.2.2.3 If the desk overbalances, load it sufficiently (see 6.4.2.1.4) to just prevent it from over-balancing when the force of 600 N is again applied.

© SABS

©SABS. Licensed exclusively to Stephen Shole; License ID : DX2X-OOSR-N81Y.
Copying and network storage prohibited.
You can make one paper copy of the standard; No paper copy may be photocopied or reproduced in any way.

6.4.2.2.4 Release the force and reapply it a further nine times, but measure the deflection *e* when the force is being applied for the last time.

6.4.2.2.5 Repeat 6.4.2.2.2 to 6.4.2.2.4 (inclusive), but apply the force to point B.

6.4.2.2.6 So position the desk that legs 2 and 3 are between the stops.

6.4.2.2.7 Repeat 6.4.2.2.2 to 6.4.2.2.4 (inclusive), but apply the force to point C.

6.4.2.2.8 Repeat 6.4.2.2.2 to 6.4.2.2.4 (inclusive), but apply the force to point D.

6.4.2.2.9 Check for compliance with 4.4.2.

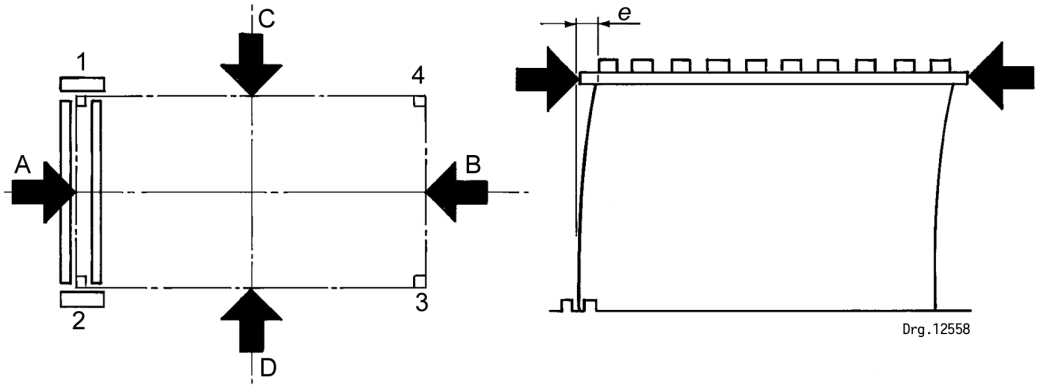

Figure 2 — Horizontal static load test

6.4.3 Horizontal impact test

NOTE This test is intended to assess the structural strength of a desk and damage to the surface finishes can therefore be ignored.

6.4.3.1 Apparatus

Impacter as illustrated in figure 3.

6.4.3.2 Procedure

Allow the impacter to fall 10 times from a height of 180 mm onto each of the following points:

a) a point of support of the main worksurface;

b) the centre of the span of the main worksurface; and

c) the edge of any fully extended ancillary worksurface furthest from the point of support.

Check for compliance with 4.4.2.

©SABS. Licensed exclusively to Stephen Shole; License ID : DX2X-OOSR-N81Y.
Copying and network storage prohibited.
You can make one paper copy of the standard; No paper copy may be photocopied or reproduced in any way.

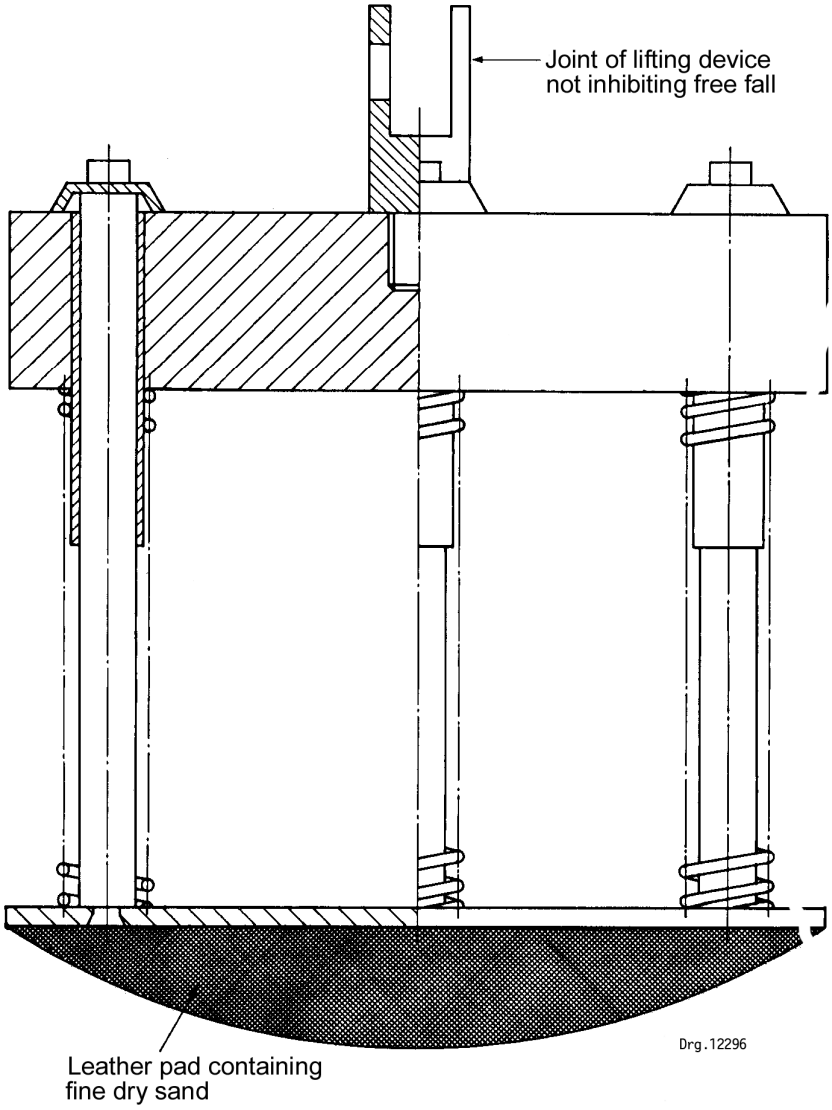

NOTE 1 Total mass is 25,0 kg ± 0,1 kg.

NOTE 2 Diameter is 200 mm.

NOTE 3 Spring rate of combined spring system is 0,69 kg/mm ± 0,10 kg/mm.

NOTE 4 Total friction resistance of moving parts is 0,025 kg to 0,45 kg.

NOTE 5 Spring system compressed to initial load of 104,0 kg ± 0,4 kg (amount of spring available from initial compression to fully closed is at least 60 mm).

Figure 3 — Impacter

© SABS

©SABS. Licensed exclusively to Stephen Shole; License ID : DX2X-OOSR-N81Y.
Copying and network storage prohibited.
You can make one paper copy of the standard; No paper copy may be photocopied or reproduced in any way.

6.4.4 Drop test

6.4.4.1 Non-stackable items

Stand the desk on a flat concrete floor and so raise one short end (the heaviest end in the case of a desk that has storage areas such as drawers on one side only) that the bottom ends of the legs are 300 mm above the floor.

Allow the desk to drop freely 10 times.

Check for compliance with 4.4.2.

6.4.4.2 Stackable items

So raise one leg of the desk that the line joining the bottom end of that leg to the bottom end of the diagonally opposite leg is at 20° to the horizontal and the line joining the bottom ends of the other legs is horizontal.

Allow the table to drop 10 times onto this leg and then 10 times onto the diagonally opposite leg.

Check for compliance with 4.4.2.

6.5 Tests for durability

6.5.1 Horizontal durability test

6.5.1.1 Apparatus

6.5.1.1.1 Stops designed to prevent the desk under test from sliding but not from tilting. The height of the stops is the lowest that can be used to prevent sliding.

6.5.1.1.2 Four loading pads each of size 75 mm × 75 mm, of hard smooth material and that have rounded edges.

6.5.1.1.3 Means of applying a horizontal force of 150 N in a cycle to each of the points a, b, c and d shown in figure 4. A cycle takes at least 2 s and the force applied to each point changes from 0 N to 150 N to 0 N within at least 1 s.

6.5.1.1.4 Masspieces to apply loads of up to but not exceeding 100 kg.

6.5.1.1.5 Means of measuring the horizontal deflection *e* (see figure 4) of the desk under test.

6.5.1.2 Procedure

6.5.1.2.1 So position the desk that there are stops around all the legs.

6.5.1.2.2 Using the loading pads, apply one cycle of forces (see 6.5.1.1.3) to the desk.

6.5.1.2.3 If the desk overbalances, load it sufficiently (see 6.5.1.1.4) to just prevent it from over-balancing when the cycle of forces is again applied.

6.5.1.2.4 Measure the deflection at each of the points a, b, c and d while the force is being applied.

6.5.1.2.5 Carry out 30 000 cycles of loading.

6.5.1.2.6 Again measure the deflection at each of the points a, b, c and d when the force is being applied for the last time.

6.5.1.2.7 Check for compliance with 4.4.2.

©SABS. Licensed exclusively to Stephen Shole; License ID : DX2X-OOSR-N81Y.
Copying and network storage prohibited.
You can make one paper copy of the standard; No paper copy may be photocopied or reproduced in any way.

Dimensions in millimetres

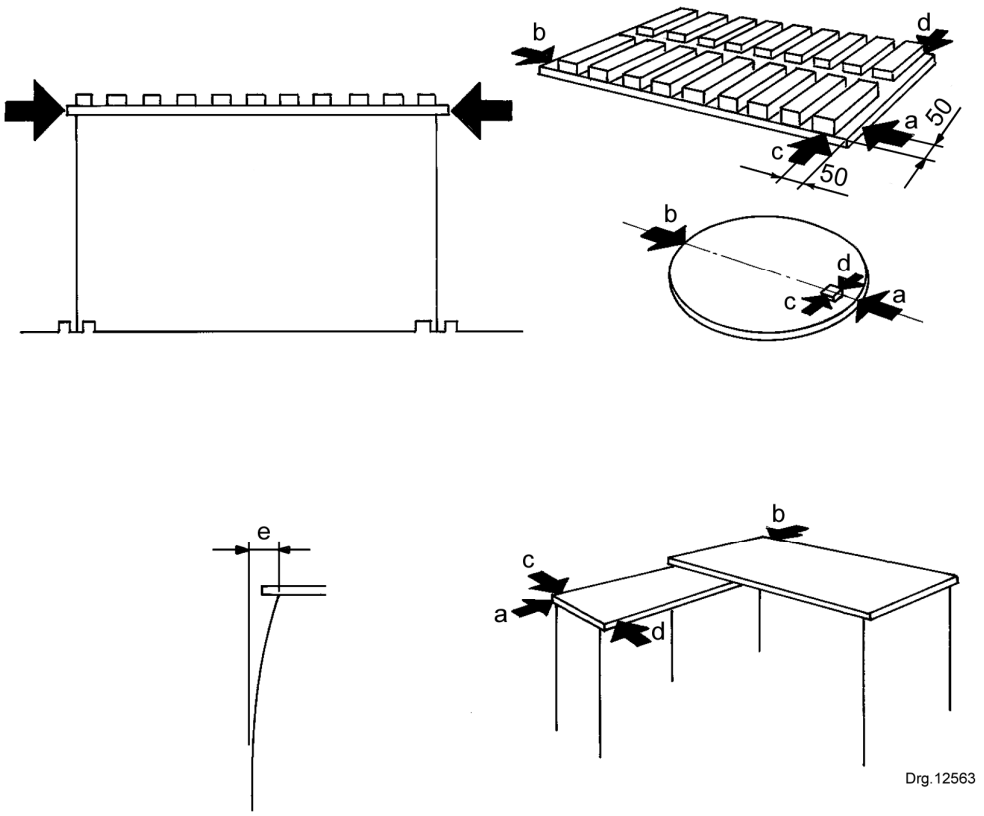

Figure 4 — Horizontal durability test

6.5.2 Vertical durability test

NOTE This test applies to cantilever and pedestal tables only.

6.5.2.1 Apparatus

6.5.2.1.1 Loading pad of size 75 mm × 75 mm, of hard smooth material and that has rounded edges.

6.5.2.1.2 Means of applying a vertical force of 150 N in a cycle. The cycle of forces changes from 0 N to 150 N to 0 N within approximately 1 s.

6.5.2.1.3 Masspieces to apply a uniformly distributed load of up to but not exceeding 100 kg.

6.5.2.2 Procedure

6.5.2.2.1 Using the loading pad, apply (and maintain) the force of 150 N to the table under test, at a point 50 mm from the edge.

6.5.2.2.2 Using the masspieces, load the table with the maximum load possible without causing overbalancing (see 6.5.2.1.3).

© SABS

©SABS. Licensed exclusively to Stephen Shole; License ID : DX2X-OOSR-N81Y.
Copying and network storage prohibited.
You can make one paper copy of the standard; No paper copy may be photocopied or reproduced in any way.

6.5.2.2.3 Measure the deflection.

6.5.2.2.4 Release the force and then reapply it for 30 000 cycles (see 6.5.2.1.2).

6.5.2.2.5 Again measure the deflection when the force is being applied for the last time.

6.5.2.2.6 Check for compliance with 4.4.2.

6.5.3 Durability of adjustable parts

If any part of the desk is adjustable, adjust the part over its adjustment range for 5 000 cycles. Check for compliance with 4.4.2.

©SABS. Licensed exclusively to Stephen Shole; License ID : DX2X-OOSR-N81Y.
Copying and network storage prohibited.
You can make one paper copy of the standard; No paper copy may be photocopied or reproduced in any way.

Annex A
(informative)

Quality verification of desks

When a purchaser requires ongoing verification of the quality of desks, it is suggested that, instead of concentrating solely on evaluation of the final product, he also direct his attention to the manufacturer's quality system. In this connection it should be noted that SANS 9001 covers the provision of an integrated quality system. **Amdt 2**

© SABS

©SABS. Licensed exclusively to Stephen Shole; License ID : DX2X-OOSR-N81Y.
Copying and network storage prohibited.
You can make one paper copy of the standard; No paper copy may be photocopied or reproduced in any way.

Annex B
(normative)

Dimensions of office furniture

The dimensions of the types of office furniture that comply with this part of SANS 1528 are shown in figures B.1 to B.23.

Timber shall be certified in accordance with the relevant national department (see foreword).

All wooden components shall be coated with synthetic resin lacquer.

Dimensions in millimetres

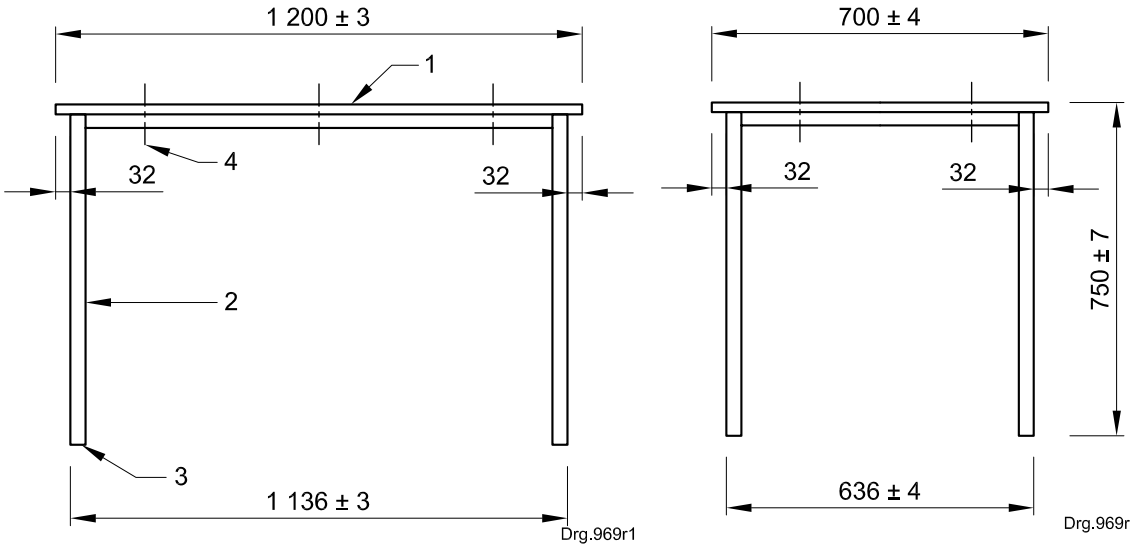

a) Front view **b) Side view**

Key

1 tabletop
2 steel frame
3 plug
4 tamper-proof screw

The tabletop shall be made from 21 mm solid *Saligna* hardwood (*Eucalyptus grandis*) in accordance with SANS 1460.

The steel frame assembly shall be made from 25,4 mm square tubing in accordance with SANS 657-4, with a baked epoxy or polyester coating finish in accordance with SANS 1274.

The legs of the table shall be fitted with acceptable plugs.

The tabletop shall be fitted to the steel frame with tamper-proof screws.

Figure B.1 — Staff room table — *Saligna*

Amdt 3

©SABS. Licensed exclusively to Stephen Shole; License ID : DX2X-OOSR-N81Y.
Copying and network storage prohibited.
You can make one paper copy of the standard; No paper copy may be photocopied or reproduced in any way.

Dimensions in millimetres

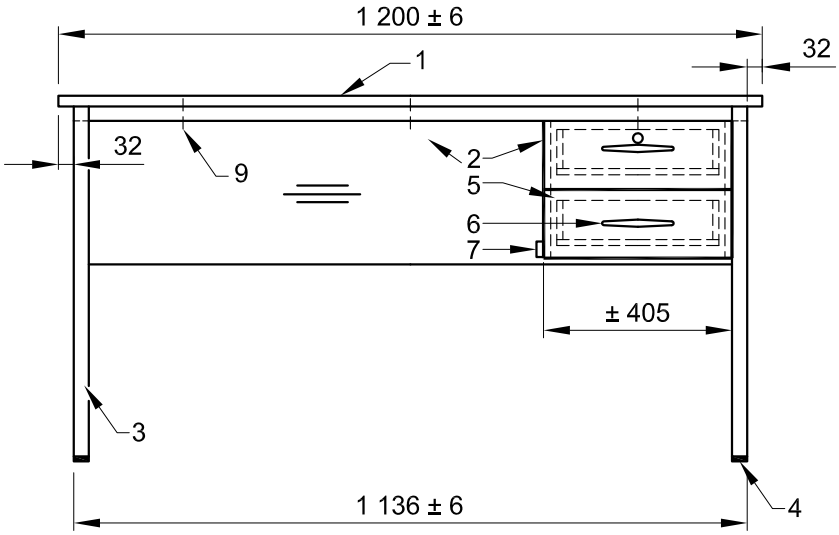

Drg.969s1

a) Front view

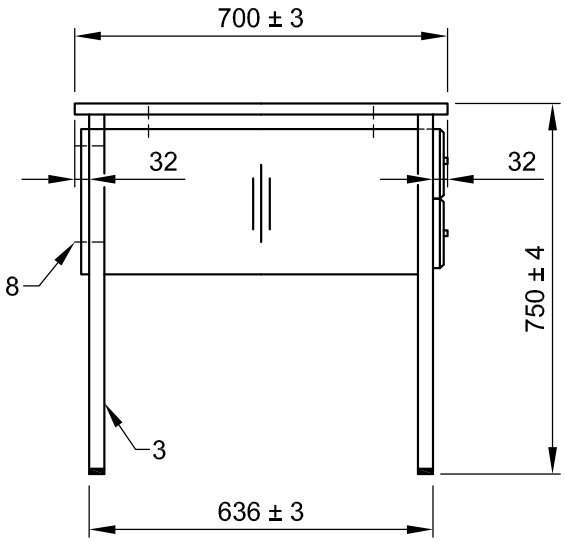

Drg.969s

b) Side view

Key

1 tabletop
2 modesty panel and drawer
3 steel frame
4 plug
5 drawer front
6 acceptable handle
7 knock-down “Prisma” fitting
8 flange pop rivet
9 tamper-proof screw

The tabletop shall be made from 21 mm solid *Saligna* hardwood (*Eucalyptus grandis*) in accordance with SANS 1460.
The modesty panel and drawer box carcass shall be made from matching 16 mm substrate veneer in accordance with SANS 929, and all the edges shall be sealed with matching veneer.
The steel frame shall be made from 25 mm square tubing in accordance with SANS 657-4, with a baked epoxy or polyester coating finish in accordance with SANS 1274.
The legs of the table shall be fitted with acceptable plugs.
The drawer fronts shall be made from 21 mm solid *Saligna* hardwood in accordance with SANS 1460, and the top drawer shall be fitted with an acceptable lockable lock.
The modesty panel shall be secured to the steel frame with 4,8 mm × 27 mm large flange pop rivets.
The tabletop shall be fitted to the steel frame with tamper-proof screws.

Figure B.2 — 1 200 mm office desk with two drawers — *Saligna*

Amdt 3

© SABS

©SABS. Licensed exclusively to Stephen Shole; License ID : DX2X-OOSR-N81Y.
Copying and network storage prohibited.
You can make one paper copy of the standard; No paper copy may be photocopied or reproduced in any way.

Dimensions in millimetres

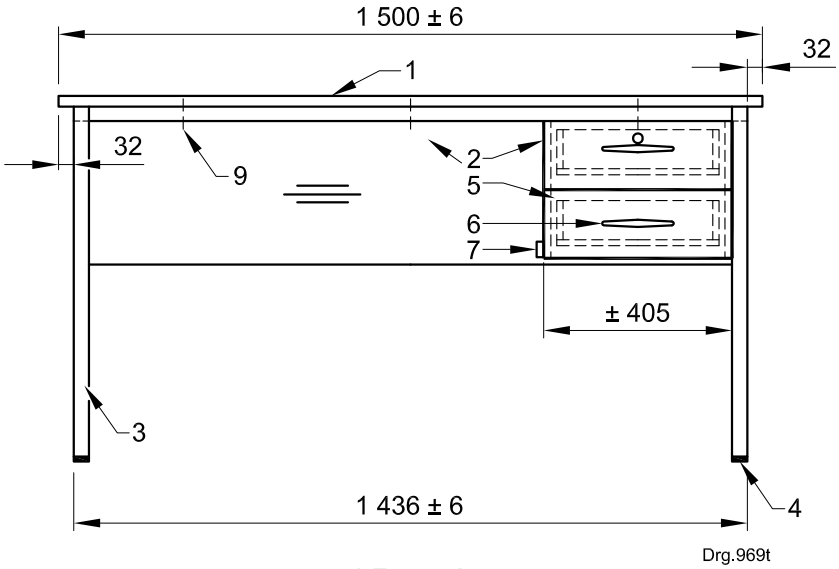

a) Front view

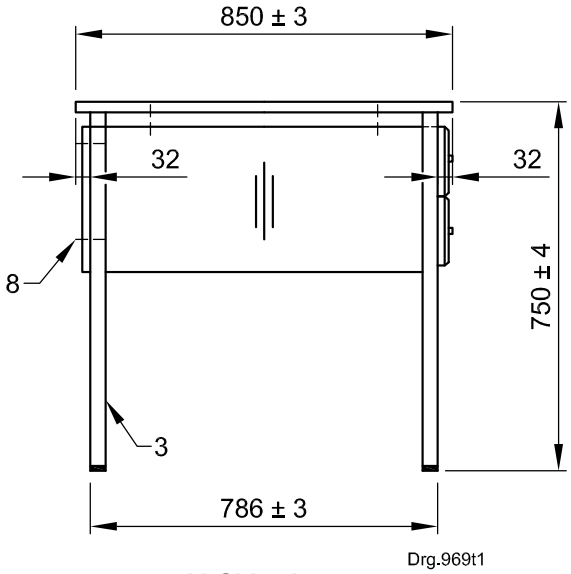

b) Side view

Key

1 tabletop
2 modesty panel and drawer
3 steel frame
4 plug
5 drawer front
6 acceptable handle
7 knock-down “Prisma” fitting
8 flange pop rivet
9 tamper-proof screw

The tabletop shall be made from 21 mm solid *Saligna* hardwood (*Eucalyptus grandis*) in accordance with SANS 1460.
The modesty panel and drawer box carcass shall be made from matching 16 mm substrate veneer in accordance with SANS 929, and all the edges shall be sealed with matching veneer.
The steel frame shall be made from 25 mm square tubing in accordance with SANS 657-4, with a baked epoxy or polyester coating finish in accordance with SANS 1274.
The legs of the table shall be fitted with acceptable plugs.
The drawer fronts shall be made from 21 mm solid *Saligna* hardwood in accordance with SANS 1460, and the top drawer shall be fitted with an acceptable lockable lock.
The modesty panel shall be secured to the steel frame with 4,8 mm × 27 mm large flange pop rivets.
The tabletop shall be fitted to the steel frame with tamper-proof screws.

Figure B.3 — 1 500 mm office desk with two drawers — *Saligna*

Amdt 3

©SABS. Licensed exclusively to Stephen Shole; License ID : DX2X-OOSR-N81Y.
Copying and network storage prohibited.
You can make one paper copy of the standard; No paper copy may be photocopied or reproduced in any way.

Dimensions in millimetres

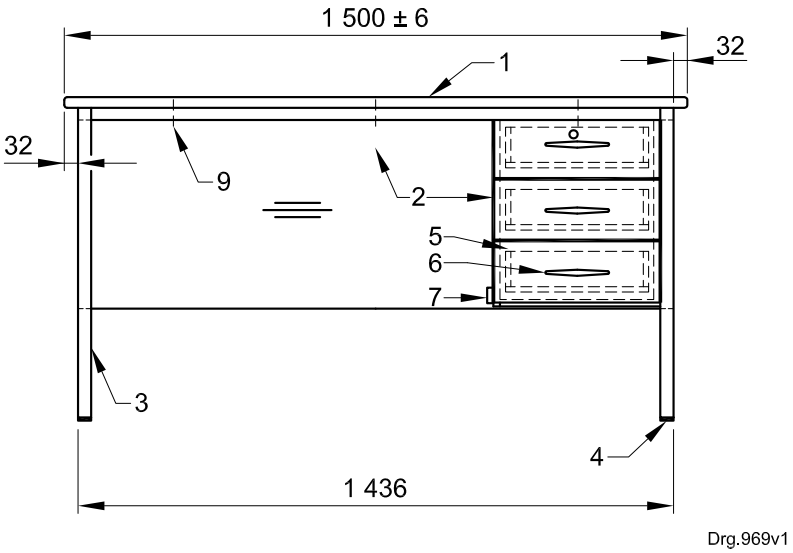

a) Front view

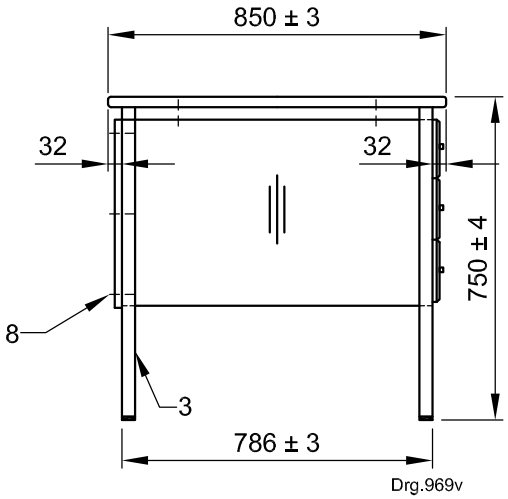

b) Side view

Key

1 tabletop
2 modesty panel and drawer
3 steel frame
4 plug
5 drawer front
6 handle
7 knock-down “Prisma” fitting
8 flange pop rivet
9 tamper-proof screw

The tabletop shall be made from 21 mm solid *Saligna* hardwood (*Eucalyptus grandis*) in accordance with SANS 1460.
The modesty panel and drawer box carcass shall be made from matching 16 mm substrate veneer in accordance with SANS 929, and all the edges shall be sealed with matching veneer.
The steel frame shall be made from 25 mm square tubing in accordance with SANS 657-4, with a baked epoxy or polyester coating finish in accordance with SANS 1274.
The legs of the table shall be fitted with acceptable plugs.
The drawer fronts shall be made from 21 mm solid *Saligna* hardwood in accordance with SANS 1460, and the top drawer shall be fitted with an acceptable lockable lock.
The drawer fronts shall be fitted with acceptable handle and drawer slides.
The drawers shall be fitted with knock-down "Prisma".
The modesty panel shall be secured to the steel frame with 4,8 mm × 27 mm large flange pop rivets.
The tabletop shall be fitted to the steel frame with tamper-proof screws.

Figure B.4 — Teacher’s desk with three drawers — *Saligna*

Amdt 3

© SABS

©SABS. Licensed exclusively to Stephen Shole; License ID : DX2X-OOSR-N81Y.
Copying and network storage prohibited.
You can make one paper copy of the standard; No paper copy may be photocopied or reproduced in any way.

Dimensions in millimetres

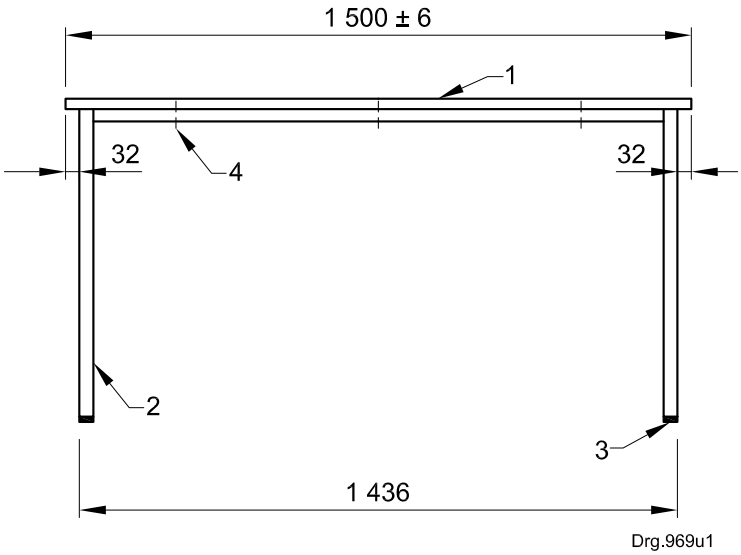

a) Front view

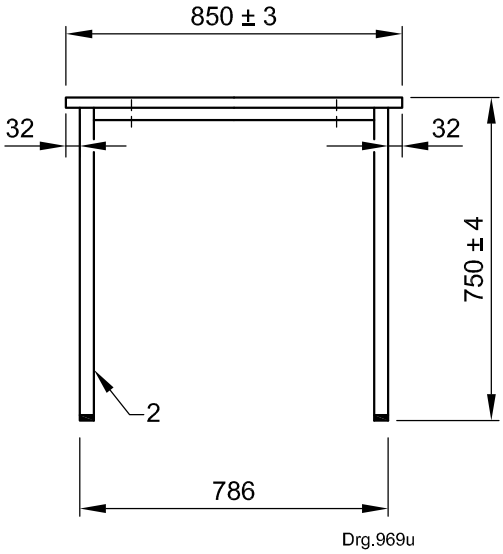

b) Side view

Key

1 tabletop
2 steel frame
3 plug
4 tamper-proof screws

The tabletop shall be made from 21 mm solid *Saligna* hardwood (*Eucalyptus grandis*) in accordance with SANS 1460. The particle board shall be in accordance with SANS 929, and all the edges shall be sealed with matching veneer.

The steel frame assembly shall be made from 25,4 mm square tubing in accordance with SANS 657-4, with a baked epoxy or polyester coating finish in accordance with SANS 1274.

The legs of the table shall be fitted with acceptable plugs.

The tabletop shall be fitted to the steel frame with tamper-proof screws.

Figure B.5 — Office table — *Saligna*

Amdt 3

©SABS. Licensed exclusively to Stephen Shole; License ID : DX2X-OOSR-N81Y.
Copying and network storage prohibited.
You can make one paper copy of the standard; No paper copy may be photocopied or reproduced in any way.

Dimensions in millimetres

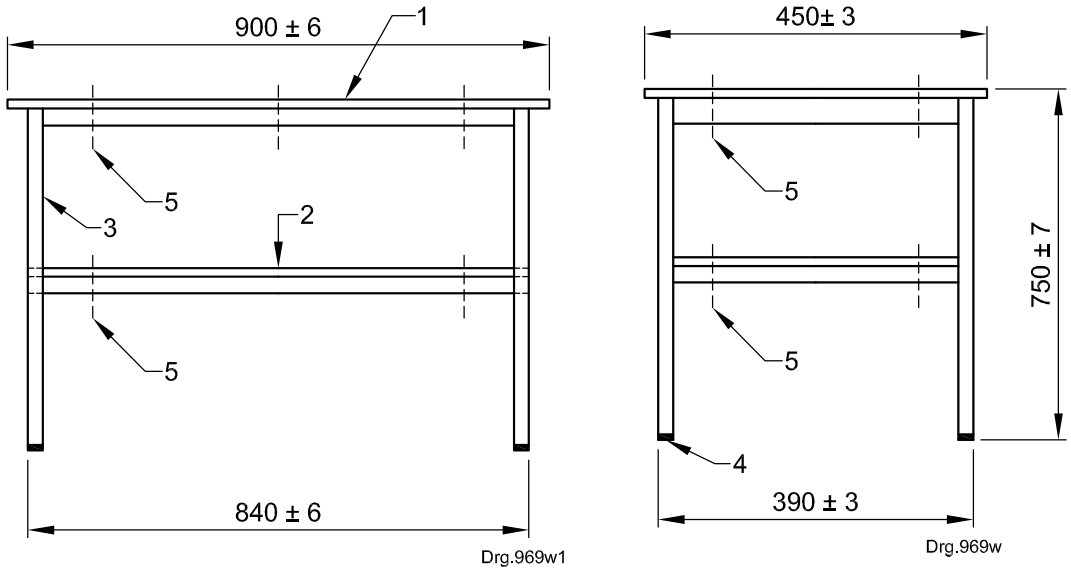

a) Front view **b) Side view**

Key

1 tabletop
2 shelf
3 steel frame
4 plug
5 tamper-proof screw

The tabletop shall be made from 21 mm solid *Saligna* hardwood (*Eucalyptus grandis*) in accordance with SANS 1460. The particle board shall be in accordance with SANS 929, and all the edges shall be sealed with matching veneer.

The shelf shall be made from matching 16 mm substrate veneer board in accordance with SANS 929, and all the edges shall be sealed with matching veneer.

The steel frame assembly shall be made from 32 mm square tubing in accordance with SANS 657-4, with a baked epoxy or polyester coating finish in accordance with SANS 1274.

The legs of the table shall be fitted with acceptable plugs.

The tabletop shall be fitted to the steel frame with tamper-proof screws.

Figure B.6 — Telephone table — *Saligna*

Amdt 3

© SABS

©SABS. Licensed exclusively to Stephen Shole; License ID : DX2X-OOSR-N81Y.
Copying and network storage prohibited.
You can make one paper copy of the standard; No paper copy may be photocopied or reproduced in any way.

Dimensions in millimetres

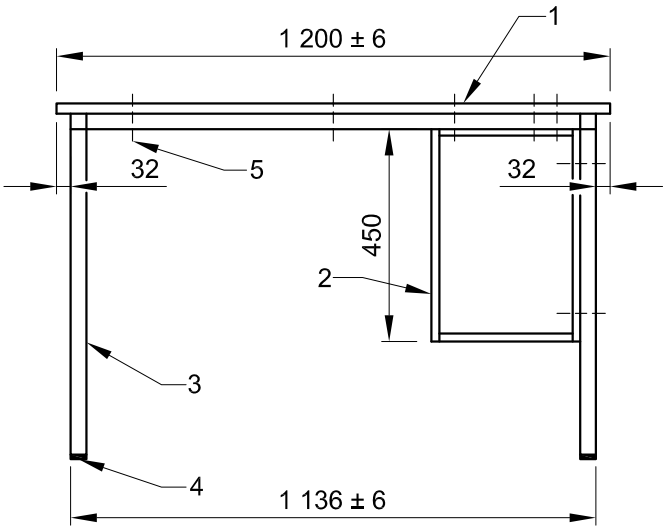

a) Front view

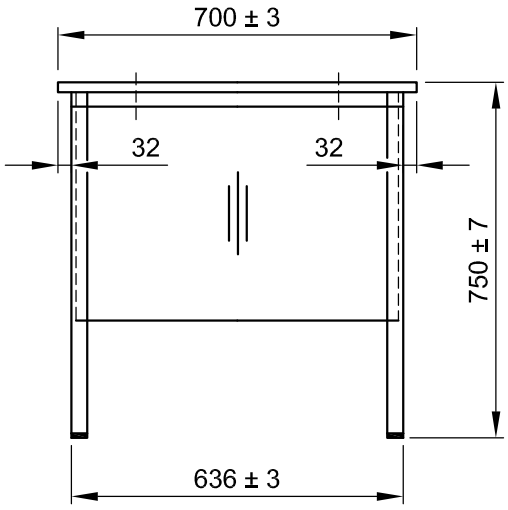

b) Side view

Key

1 tabletop
2 CPU box
3 steel frame
4 plug
5 tamper-proof screw

The tabletop shall be made from 21 mm solid *Saligna* hardwood (*Eucalyptus grandis*) in accordance with SANS 1460. The particle board shall be in accordance with SANS 929, and all the edges shall be sealed with matching veneer.

The CPU box shall be made from matching 16 mm subtrate veneer board in accordance with SANS 929, and all the edges shall be sealed with a matching 16 mm veneer.

The steel frame assembly shall be made from 25 mm square tubing in accordance with SANS 657-4, with a baked epoxy or polyester coating finish in accordance with SANS 1274.

The legs of the table shall be fitted with acceptable plugs.

The tabletop shall be fitted to the steel frame with tamper-proof screws.

Figure B.7 — Computer table — *Saligna*

Amdt 3

©SABS. Licensed exclusively to Stephen Shole; License ID : DX2X-OOSR-N81Y.
Copying and network storage prohibited.
You can make one paper copy of the standard; No paper copy may be photocopied or reproduced in any way.

Dimensions in millimetres

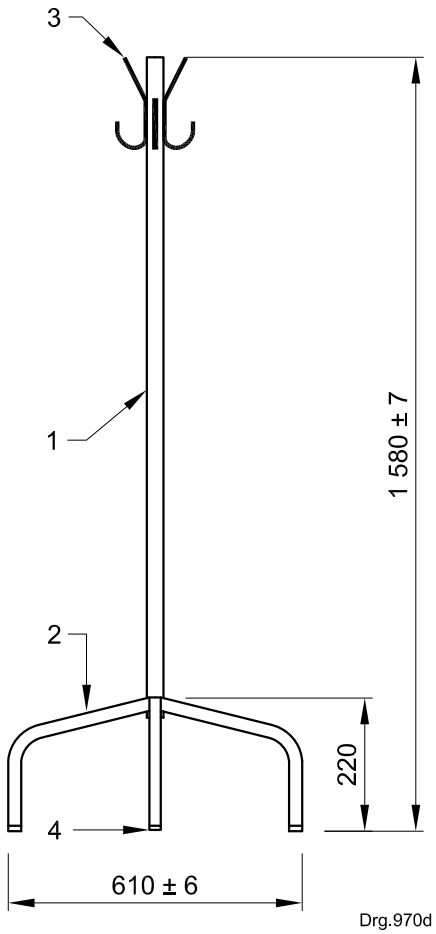

Key

1 steel frame
2 leg of steel frame
3 coat or hat hook
4 plug

The steel frame shall be made from ø 32 mm tubing in accordance with SANS 657-4, with a baked epoxy or polyester coating finish in accordance with SANS 1274.

The legs of the steel frame shall be made from ø 25 mm tubing in accordance with SANS 657-4, with a baked epoxy or polyester coating finish in accordance with SANS 1274.

The coat or hat hooks shall be made from ø 12 mm rod welded to the steel frame.

The steel frame assembly shall be made from 25 mm square tubing in accordance with SANS 657-4, with a baked epoxy or polyester coating finish in accordance with SANS 1274.

The legs of the table shall be fitted with acceptable plugs.

Figure B.8 — Coat and hat stand — Steel

Amdt 3

© SABS

©SABS. Licensed exclusively to Stephen Shole; License ID : DX2X-OOSR-N81Y.
Copying and network storage prohibited.
You can make one paper copy of the standard; No paper copy may be photocopied or reproduced in any way.

Dimensions in millimetres

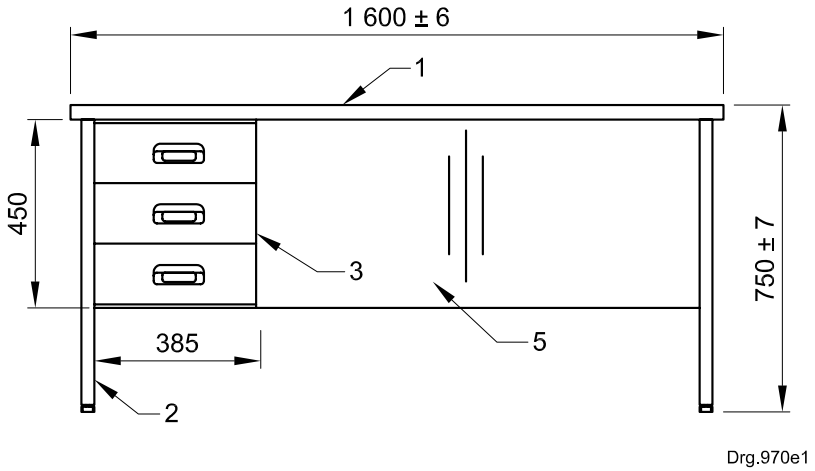

a) Front view

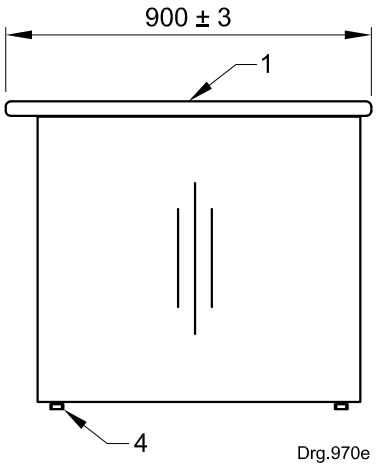

b) Side view

Key

1 desktop
2 side panel
3 desk drawer
4 adjustable foot
5 modesty panel

The desktop shall be made from (180°) postformed natural oak decorative melamine with balancing backer laminated on 32 mm substrate particle board in accordance with SANS 929.

The side panel shall be the same as the desktop but the décor shall be doubled.

The drawer box shall be furnished with three drawers. The top drawer shall be installed with a pencil tray and shall be lockable with an acceptable lock. The metal drawer runners shall be made such that they match the handles.

The desk shall be fitted with acceptable height-adjustable feet.

The modesty panel shall be made from double-sided melamine-faced natural oak made from 16 mm particle board in accordance with SANS 929.

Figure B.9 — Desk with drawers on the left-hand side — Oak melamine

Amdt 3

©SABS. Licensed exclusively to Stephen Shole; License ID : DX2X-OOSR-N81Y.
Copying and network storage prohibited.
You can make one paper copy of the standard; No paper copy may be photocopied or reproduced in any way.

Dimensions in millimetres

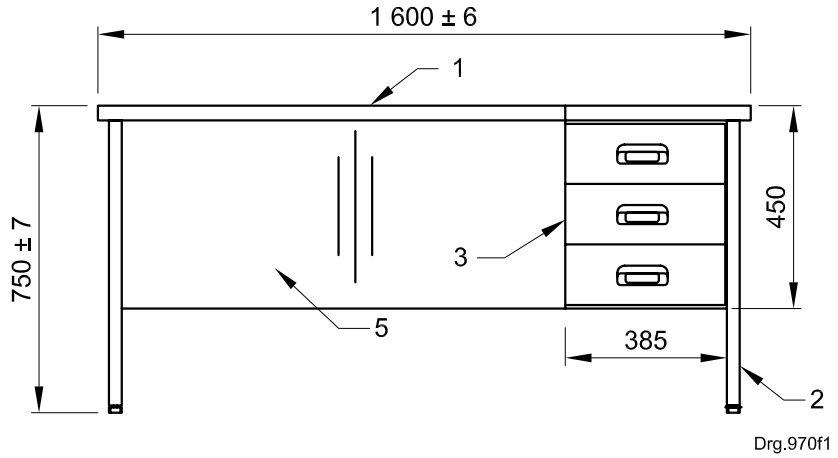

a) Front view

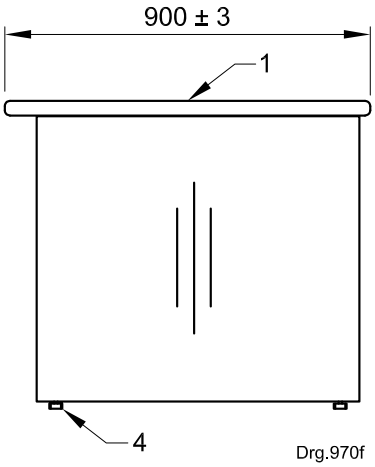

b) Side view

Key

1 desktop
2 side panel
3 desk drawer
4 adjustable foot
5 modesty panel

The desktop shall be made from (180°) postformed natural oak decorative melamine with balancing backer laminated on 32 mm substrate particle board in accordance with SANS 929.

The side panel shall be the same as the desktop but the décor shall be doubled.

The drawer box shall be furnished with three drawers. The top drawer shall be installed with a pencil tray and shall be lockable with an acceptable lock. The metal drawer runners shall be made such that they match the handles.

The desk shall be fitted with acceptable height-adjustable feet.

The modesty panel shall be made from double-sided melamine-faced natural oak made from 16 mm particle board in accordance with SANS 929.

Figure B.10 — Desk with drawers on the right-hand side — Oak melamine

Amdt 3

© SABS

©SABS. Licensed exclusively to Stephen Shole; License ID : DX2X-OOSR-N81Y.
Copying and network storage prohibited.
You can make one paper copy of the standard; No paper copy may be photocopied or reproduced in any way.

Dimensions in millimetres

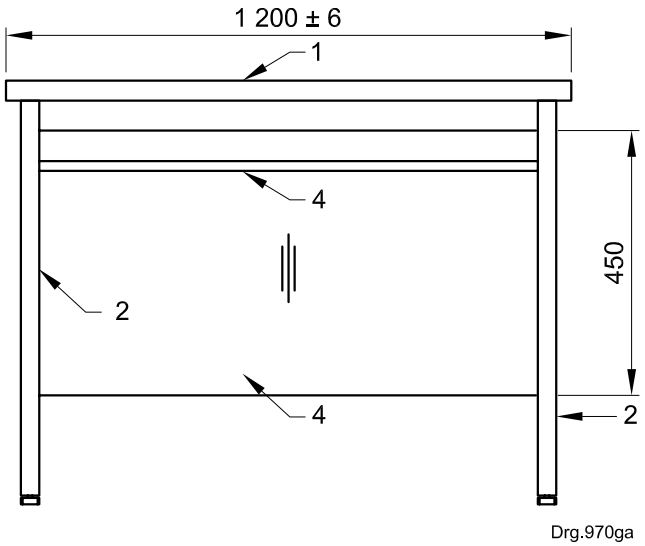

a) Front view

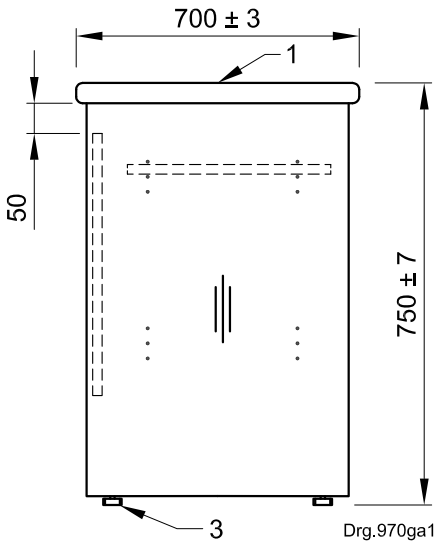

b) Side view

Key

1 tabletop
2 side panel
3 adjustable foot
4 modesty panel

The tabletop shall be made from (180°) postformed natural oak decorative melamine with balancing backer laminated on 32 mm substrate particle board in accordance with SANS 929.

The side panel shall be the same as the desktop but the décor shall be doubled.

The desk shall be fitted with acceptable height-adjustable feet.

The modesty panel shall be made from double-sided melamine-faced natural oak made from 16 mm particle board in accordance with SANS 929.

Figure B.11 — Side table — Oak melamine

Amdt 3

©SABS. Licensed exclusively to Stephen Shole; License ID : DX2X-OOSR-N81Y.
Copying and network storage prohibited.
You can make one paper copy of the standard; No paper copy may be photocopied or reproduced in any way.

Dimensions in millimetres

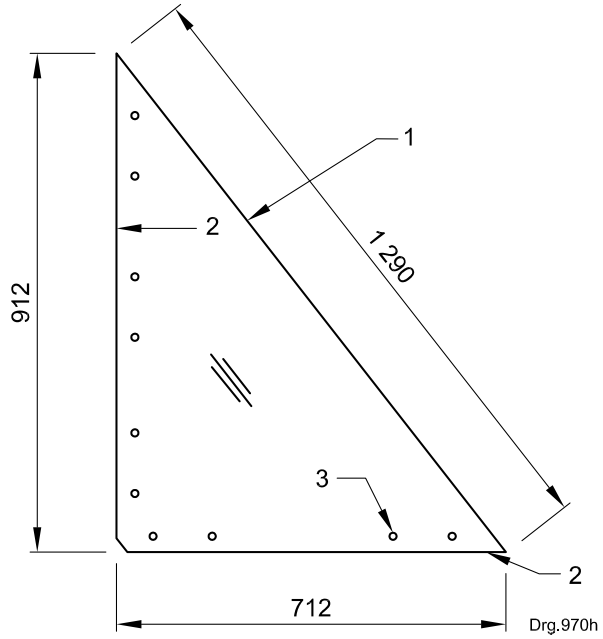

Key

1 connecting corner top
2 edge
3 fixing method

The connecting corner top shall be made from (180°) postformed natural oak decorative melamine with balancing backer laminated on 32 mm substrate particle board in accordance with SANS 929.

The edges shall be sealed with matching PVC edging that is at least 2 mm thick.

The connecting corner shall be fixed to the desk and side table by an acceptable method.

Figure B.12 — 1 290 mm connecting corner (left hand) — Oak melamine

Amdt 3

© SABS

©SABS. Licensed exclusively to Stephen Shole; License ID : DX2X-OOSR-N81Y.
Copying and network storage prohibited.
You can make one paper copy of the standard; No paper copy may be photocopied or reproduced in any way.

Dimensions in millimetres

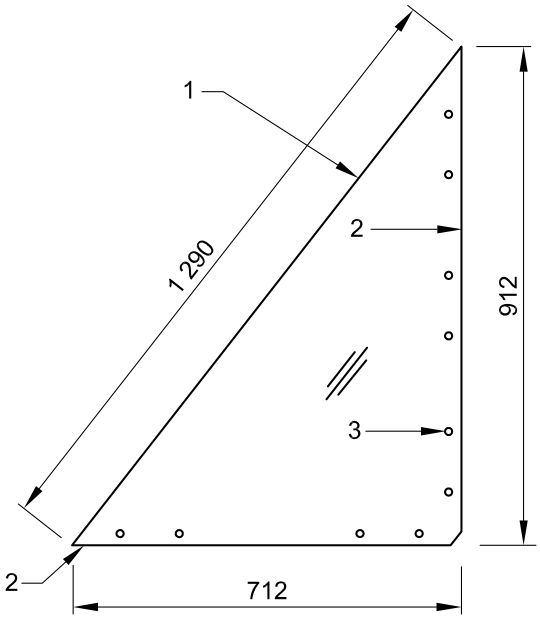

Drg.970i

Key

1 connecting corner top
2 edge
3 fixing method

The connecting corner top shall be made from (180°) postformed natural oak decorative melamine with balancing backer laminated on 32 mm substrate particle board in accordance with SANS 929.

The edges shall be sealed with matching PVC edging that is at least 2 mm thick.

The connecting corner shall be fixed to the desk and side table by an acceptable method.

Figure B.13 — 1 290 mm connecting corner (right hand) — Oak melamine

Amdt 3

©SABS. Licensed exclusively to Stephen Shole; License ID : DX2X-OOSR-N81Y.
Copying and network storage prohibited.
You can make one paper copy of the standard; No paper copy may be photocopied or reproduced in any way.

Dimensions in millimetres

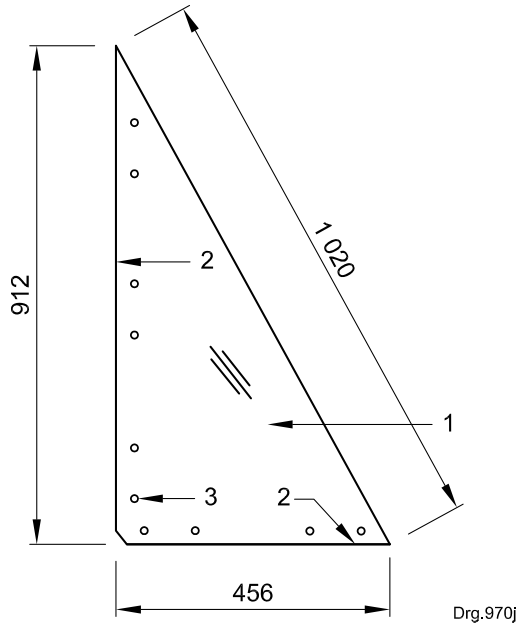

Key

1 connecting corner top
2 edge
3 fixing method

The connecting corner top shall be made from (180°) postformed natural oak decorative melamine with balancing backer laminated on 32 mm substrate particle board in accordance with SANS 929.

The edges shall be sealed with matching PVC edging that is at least 2 mm thick.

The connecting corner shall be fixed to the desk and side table by an acceptable method.

Figure B.14 — 1 020 mm connecting corner (left hand) — Oak melamine

Amdt 3

© SABS

©SABS. Licensed exclusively to Stephen Shole; License ID : DX2X-OOSR-N81Y.
Copying and network storage prohibited.
You can make one paper copy of the standard; No paper copy may be photocopied or reproduced in any way.

Dimensions in millimetres

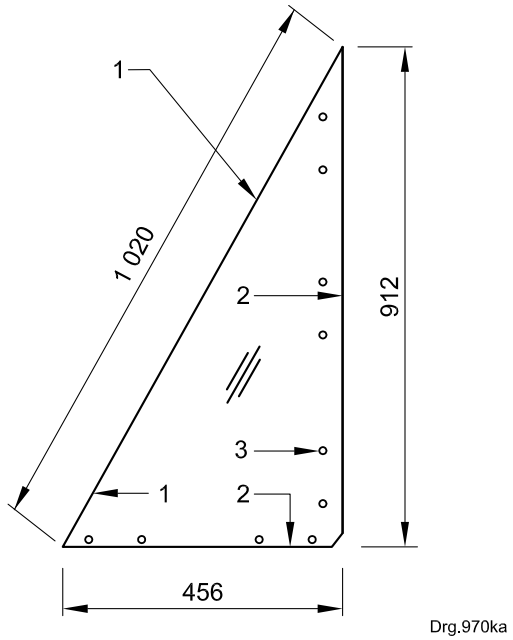

Key

1 connecting corner top
2 edge
3 fixing method

The connecting corner top shall be made from (180°) postformed natural oak decorative melamine with balancing backer laminated on 32 mm substrate particle board in accordance with SANS 929.

The edges shall be sealed with matching PVC edging that is at least 2 mm thick.

The connecting corner shall be fixed to the desk and side table by an acceptable method.

Figure B.15 — 1 020 mm connecting corner (right hand) — Oak melamine

Amdt 3

©SABS. Licensed exclusively to Stephen Shole; License ID : DX2X-OOSR-N81Y.
Copying and network storage prohibited.
You can make one paper copy of the standard; No paper copy may be photocopied or reproduced in any way.

Dimensions in millimetres

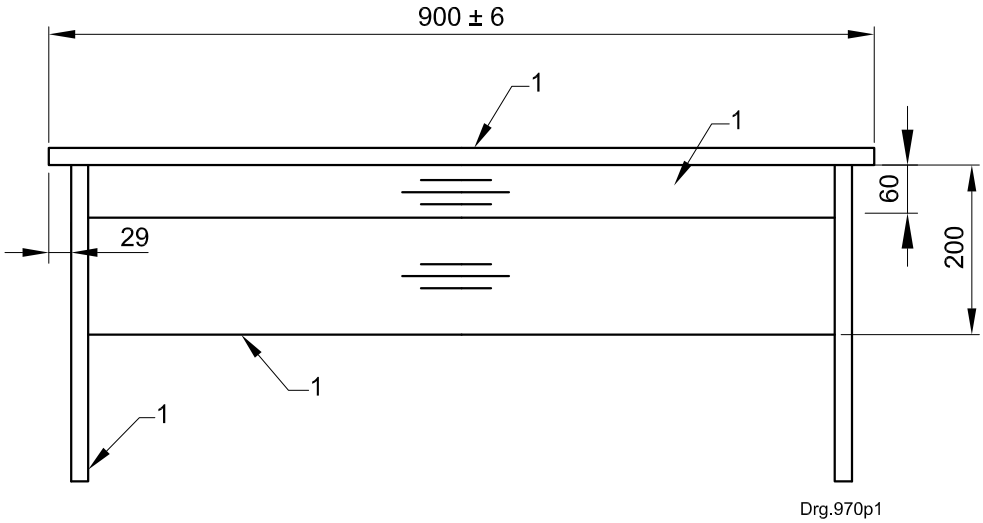

a) Front view

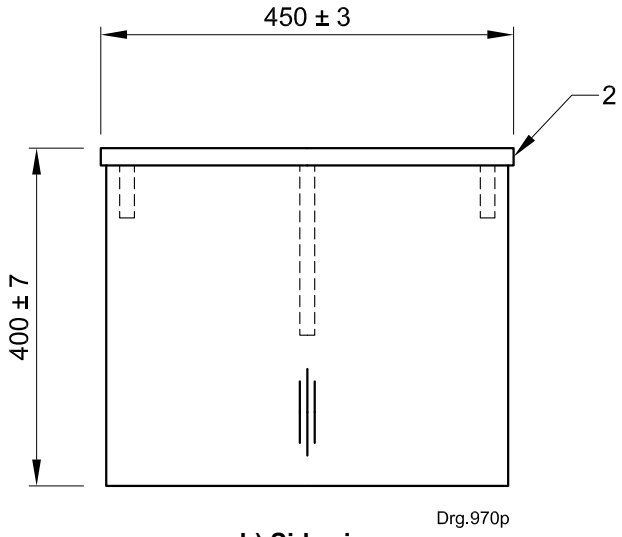

b) Side view

Key

1 carcass (top, leg and rails)
2 edge

The carcass shall be made from double-sided 16 mm melamine natural oak-faced particle board in accordance with SANS 929.

The edges shall be sealed with matching PVC edging that is at least 1 mm thick.

Figure B.16 — Coffee table — Oak melamine

Amdt 3

© SABS

©SABS. Licensed exclusively to Stephen Shole; License ID : DX2X-OOSR-N81Y.
Copying and network storage prohibited.
You can make one paper copy of the standard; No paper copy may be photocopied or reproduced in any way.

Dimensions in millimetres

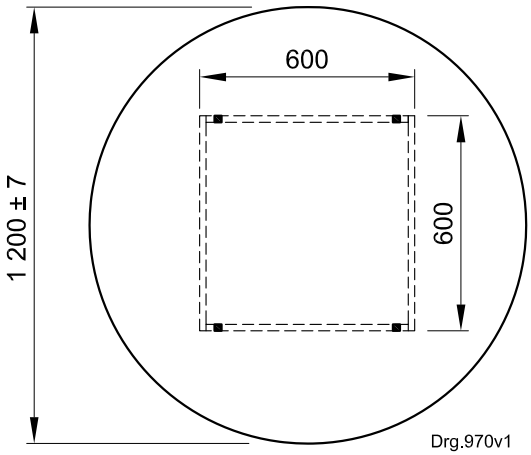

a) Top view

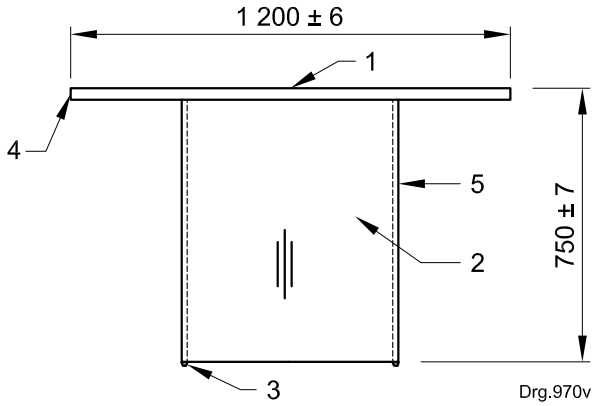

b) Front view

Key

1 tabletop
2 leg
3 glide with nail
4 top edge
5 edge

The round tabletop shall be made from 32 mm thick natural oak-faced melamine particle board in accordance with SANS 929.

The legs shall be made from double-sided melamine-faced natural oak particle board that is 16 mm thick in accordance with SANS 929.

The desk shall be fitted with acceptable glides with nails.

The top edges shall be sealed with matching PVC T-edging.

Figure B.17 — Meeting table — Oak melamine

Amdt 3

©SABS. Licensed exclusively to Stephen Shole; License ID : DX2X-OOSR-N81Y.
Copying and network storage prohibited.
You can make one paper copy of the standard; No paper copy may be photocopied or reproduced in any way.

Dimensions in millimetres

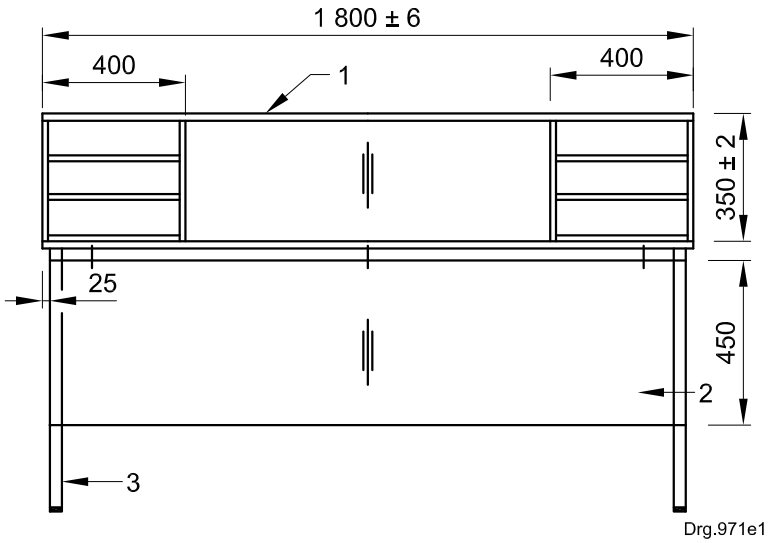

a) Front view

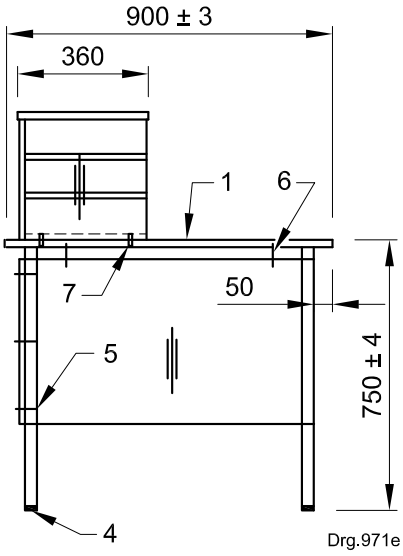

b) Side view

Key

1 tabletop
2 modesty panel
3 steel frame
4 plug
5 pop rivet
6 tamper-proof screw

The tabletop shall be made from 21 mm solid *Saligna* hardwood (*Eucalyptus grandis*) in accordance with SANS 1460.
The modesty panel counter unit shall be made from matching *Okoume* 16 mm veneer board in accordance with SANS 929, and all the edges shall be sealed with matching veneer.
The steel frame assembly shall be made from 31,75 mm square tubing in accordance with SANS 657-4, with a baked epoxy or polyester coating finish in accordance with SANS 1274.
The legs of the table shall be fitted with acceptable plugs.
The modesty panel shall be secured to the steel frame with 4,8 mm × 27 mm large flange pop rivets.
The tabletop shall be fitted to the steel frame with tamper-proof screws.
The counter unit shall be fixed onto the desktop with ø 8 mm × 30 mm dowels.

Figure B.18 — Circulation table — *Saligna*

Amdt 3

© SABS

©SABS. Licensed exclusively to Stephen Shole; License ID : DX2X-OOSR-N81Y.
Copying and network storage prohibited.
You can make one paper copy of the standard; No paper copy may be photocopied or reproduced in any way.

Dimensions in millimetres

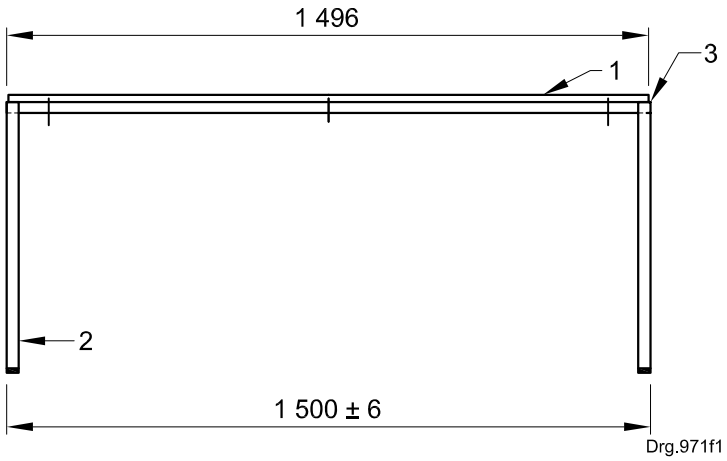

a) Front view

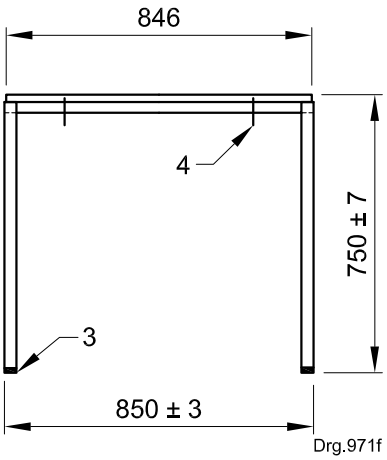

b) Side view

Key

1 tabletop
2 steel frame
3 plug
4 tamper-proof screw

The tabletop shall be made from 21 mm solid *Saligna* hardwood (*Eucalyptus grandis*) in accordance with SANS 1460.

The steel frame assembly shall be made from 31,75 mm square tubing in accordance with SANS 657-4, with a baked epoxy or polyester coating finish in accordance with SANS 1274.

The legs of the table shall be fitted with acceptable plugs.

The tabletop shall be fitted to the steel frame with tamper-proof screws.

Figure B.19 — Reading table — *Saligna*

Amdt 3

©SABS. Licensed exclusively to Stephen Shole; License ID : DX2X-OOSR-N81Y.
Copying and network storage prohibited.
You can make one paper copy of the standard; No paper copy may be photocopied or reproduced in any way.

Dimensions in millimetres

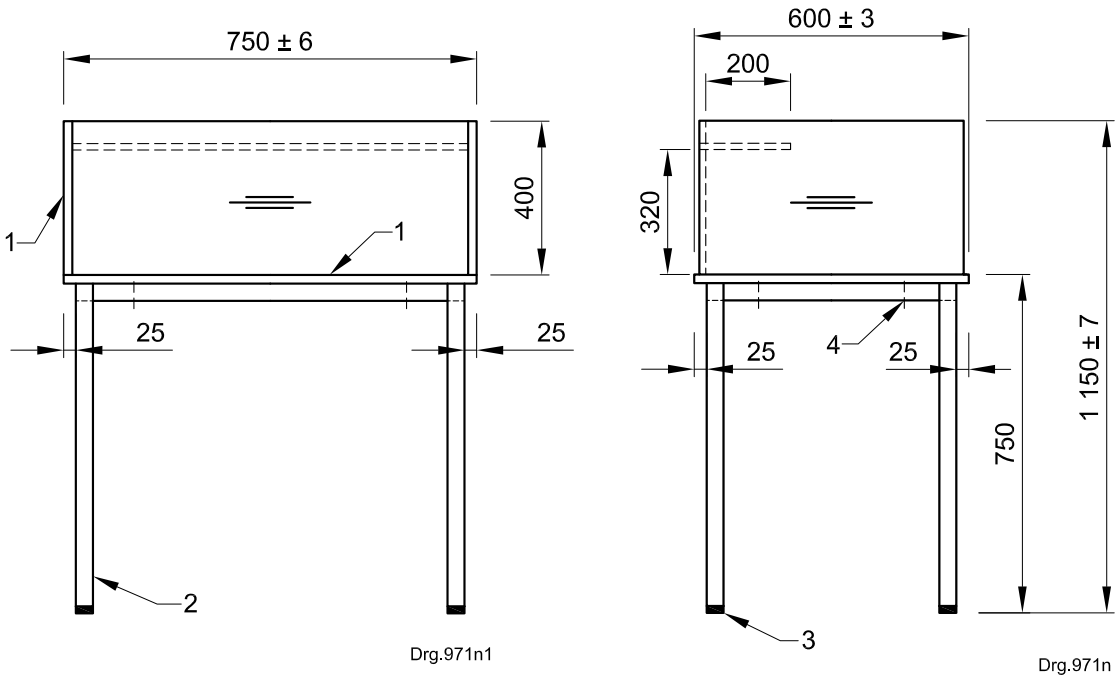

a) Front view **b) Side view**

Key

1 tabletop and carrel unit
2 steel frame
3 plug
4 tamper-proof screw

The tabletop and carrel unit shall be made from 21 mm solid *Saligna* hardwood (*Eucalyptus grandis*) in accordance with SANS 1460.

The steel frame assembly shall be made from 25 mm square tubing in accordance with SANS 657-4, with a baked epoxy or polyester coating finish in accordance with SANS 1274.

The legs of the table shall be fitted with acceptable plugs.

The tabletop shall be fitted to the steel frame with tamper-proof screws.

Figure B.20 — Single study carrel — *Saligna*

Amdt 3

© SABS

©SABS. Licensed exclusively to Stephen Shole; License ID : DX2X-OOSR-N81Y.
Copying and network storage prohibited.
You can make one paper copy of the standard; No paper copy may be photocopied or reproduced in any way.

Dimensions in millimetres

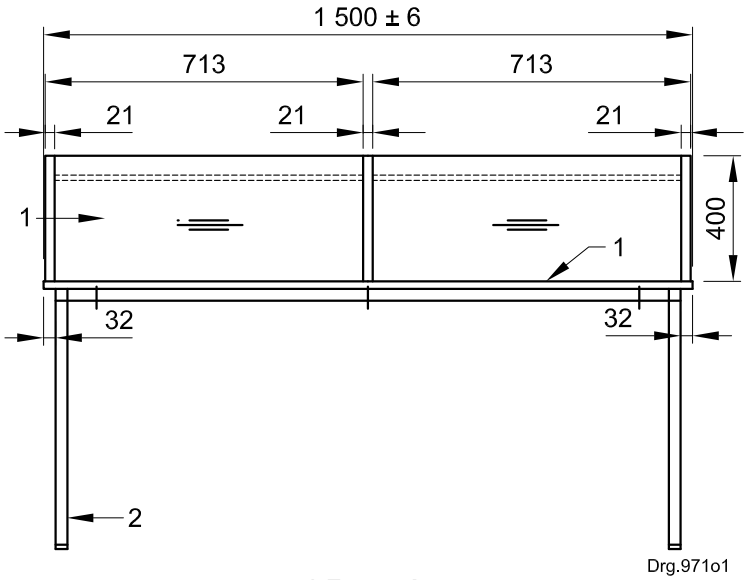

a) Front view

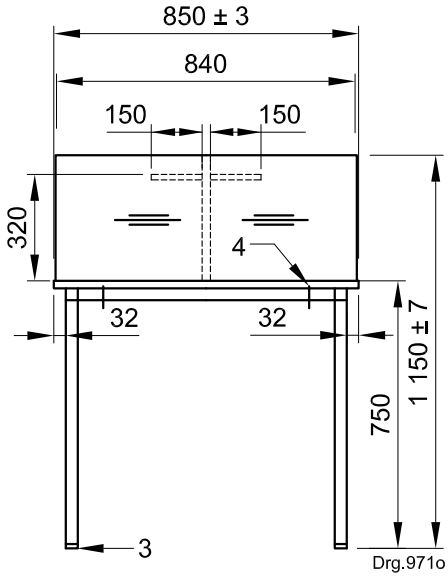

b) Side view

Key

1 tabletop and carrel unit
2 steel frame
3 plug
4 tamper-proof screw

The tabletop and carrel unit shall be made from 21 mm solid *Saligna* hardwood (*Eucalyptus grandis*) in accordance with SANS 1460.

The steel frame assembly shall be made from 25 mm square tubing in accordance with SANS 657-4, with a baked epoxy or polyester coating finish in accordance with SANS 1274.

The legs of the table shall be fitted with acceptable plugs.

The tabletop shall be fitted to the steel frame with tamper-proof screws.

Figure B.21 — Double study carrel — *Saligna*

Amdt 3

©SABS. Licensed exclusively to Stephen Shole; License ID : DX2X-OOSR-N81Y.
Copying and network storage prohibited.
You can make one paper copy of the standard; No paper copy may be photocopied or reproduced in any way.

Dimensions in millimetres

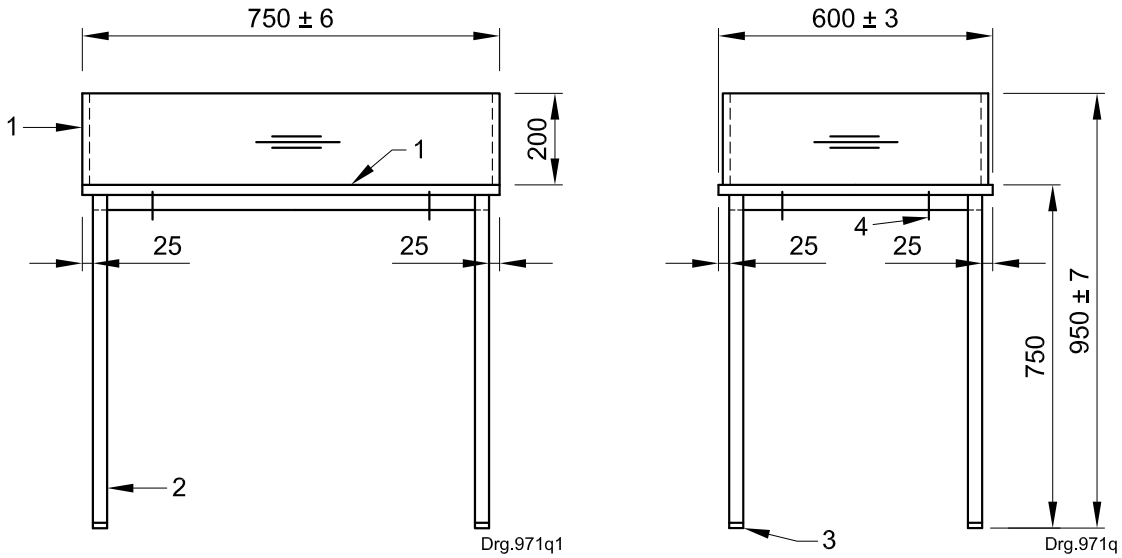

a) Front view **b) Side view**

Key

1 tabletop and browser box
2 steel frame
3 plug
4 tamper-proof screw

The tabletop and browser box shall be made from 21 mm solid *Saligna* hardwood (*Eucalyptus grandis*) in accordance with SANS 1460.

The steel frame assembly shall be made from 25 mm square tubing in accordance with SANS 657-4, with a baked epoxy or polyester coating finish in accordance with SANS 1274.

The legs of the table shall be fitted with acceptable plugs.

The tabletop shall be fitted to the steel frame with tamper-proof screws.

Figure B.22 — Browser box — *Saligna*

Amdt 3

© SABS

©SABS. Licensed exclusively to Stephen Shole; License ID : DX2X-OOSR-N81Y.
Copying and network storage prohibited.
You can make one paper copy of the standard; No paper copy may be photocopied or reproduced in any way.

Dimensions in millimetres

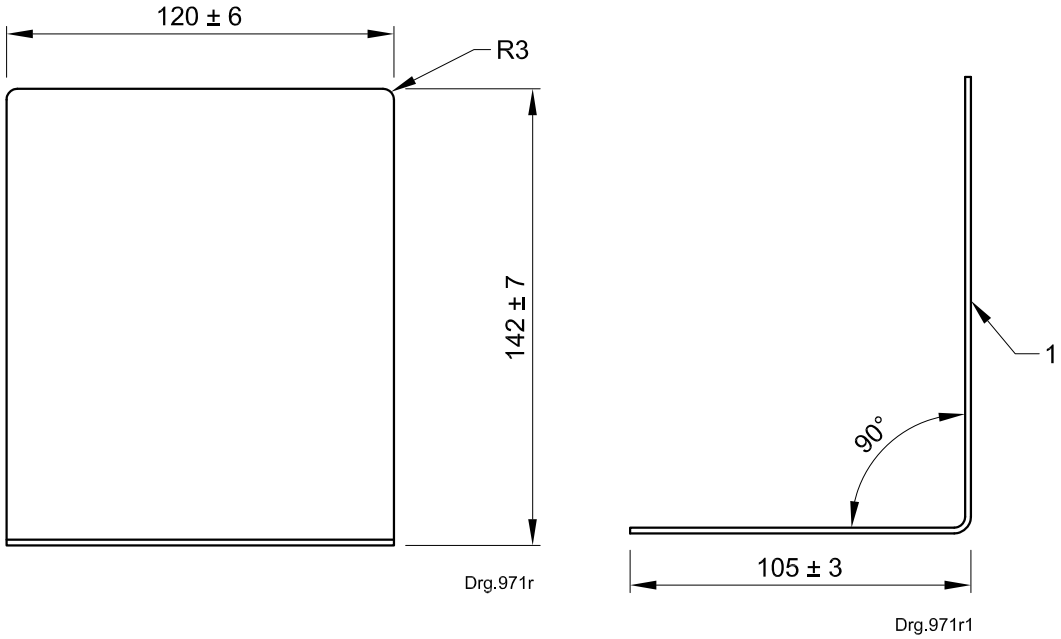

a) Front view **b) Side view**

Key

1 steel plate

The steel plate shall be made from 1,6 mm flat sheet with a baked epoxy polyester coating finish in accordance with SANS 1274.

Figure B.23 — Bookend — Steel

Amdt 3

©SABS. Licensed exclusively to Stephen Shole; License ID : DX2X-OOSR-N81Y.
Copying and network storage prohibited.
You can make one paper copy of the standard; No paper copy may be photocopied or reproduced in any way.

Bibliography **Amdt 3**

~~SABS 782, *Primer for baking enamels*.~~ **Amdt 2**

~~SABS 783, *Baking enamels*.~~ **Amdt 2**

SANS 135/ISO 1456, *Metallic and other inorganic coatings – Electrodeposited coatings of nickel, nickel plus chromium, copper plus nickel and of copper plus nickel plus chromium.* **Amdt 2**

SANS 540-1, *Fibreboard products – Part 1: Uncoated fibreboard.*

SANS 540-2, *Fibreboard products – Part 2: Coated fibreboard.*

SANS 630, *Decorative high gloss enamel paints.*

SANS 678, *Primers for wood.*

SANS 681, *Undercoats for paints.*

SANS 820, *Mild steel nails.*

SANS 887, *Varnish for interior use.*

SANS 1099, *Hardwood furniture timber.*

SANS 1171, *Metal screws for wood.*

SANS 1324, *Upholstery fabrics.*

~~SANS 1349, *Phenolic, aminoplastic and one-part polyurethane resin adhesives for the laminating and finger-jointing of timber, and for furniture and joinery.*~~ **Amdt 3**

SANS 1407, *Anodized coatings on aluminium (for general applications).*

SANS 1528-1, *Furniture – Part 1: Seating.*

SANS 1783-1, *Sawn softwood timber – Part: 1 General requirements*. **Amdt 2**

SANS 1783-3, *Sawn softwood timber – Part 3: Industrial timber*. **Amdt 2**

SANS 4586-2/ISO 4586-2, *High-pressure decorative laminates – Sheets made from thermosetting resins – Part 2: Determination of properties.* **Amdt 2**

SANS 9001/ISO 9001, *Quality management systems – Requirements*. **Amdt 2**

~~SANS 10202 (SABS 0202), *Colour marking for the identification of wrought steels commonly used in South Africa*.~~ **Amdt 3**

SANS 50312/EN 312*, Particleboards – Specifications.* **Amdt 3**

© SABS