©SABS. Licensed exclusively to Stephen Shole; License ID : B2S3-3T8G-LXOL.
Copying and network storage prohibited.
You can make one paper copy of the standard; No paper copy may be photocopied or reproduced in any way.

ISBN 978-0-626-28578-4

SANS 1528-1:2013

Edition 1.2

SOUTH AFRICAN NATIONAL STANDARD

Furniture

Part 1: Seating

Published by SABS Standards Division
1 Dr Lategan Road Groenkloof ✉ Private Bag X191 Pretoria 0001
Tel: +27 12 428 7911 Fax: +27 12 344 1568
www.sabs.co.za
© SABS

©SABS. Licensed exclusively to Stephen Shole; License ID : B2S3-3T8G-LXOL.
Copying and network storage prohibited.
You can make one paper copy of the standard; No paper copy may be photocopied or reproduced in any way.

SANS 1528-1:2013
Edition 1.2

Table of changes

Change No.	Date	Scope
Amdt 1	2008	Amended to change the designation of SABS standards to SANS standards, to update the introductory paragraph to the normative references clause, to update the definition of “acceptable”, to update referenced standards, and to clarify the term “upright seating”.
Amdt 2	2013	Amended to update referenced standards, to add requirements for seating dimensions and to correct numbering and cross-references accordingly, to move the bibliography out of annex C to the end of the document and to correct cross-references accordingly, and to rename annex C as "Dimensions of seating types".

Foreword

This South African standard was approved by National Committee SABS TC 136, *Furniture*, in accordance with procedures of the SABS Standards Division, in compliance with annex 3 of the WTO/TBT agreement.

This document was published in March 2013.

This document supersedes SANS 1528-1:2008 (edition 1.1).

A vertical line in the margin shows where the text has been technically modified by amendment No. 2.

SANS 1528 consists of the following parts, under the general title *Furniture*:

Part 1: Seating.

Part 2: Desks, tables and computer stands.

Part 3: Storage units.

Part 4: Bunk beds for domestic use.

Part 6: High chairs for domestic use.

Part 7: Children's cots for domestic use.

Annex C forms an integral part of this document. Annexes A and B are for information only.

Amdt 2

Introduction

This part of SANS 1528 is intended for the use of manufacturers/agents/suppliers as well as buyers. It is a valuable reference work which sets basic performance levels to satisfy the fitness for purpose of a commodity. When a purchasing document is prepared, the information in annex A could also prove invaluable.

©SABS. Licensed exclusively to Stephen Shole; License ID : B2S3-3T8G-LXOL.
Copying and network storage prohibited.
You can make one paper copy of the standard; No paper copy may be photocopied or reproduced in any way.

Contents

Page

Foreword

Introduction

1 Scope 3

2 Normative references 3

3 Definitions 4

4 Requirements 4

5 Marking 10

6 Inspection and methods of test 11

6.1 Inspection 11
6.2 Tests on surface finish 11
6.3 Tests for stability 11
6.4 General conditions for tests for strength and durability 15
6.5 Seat static load test 22
6.6 Back static load test 23
6.7 Arm and wing sideways static load test 24
6.8 Arm downward static load test 25
6.9 Seat fatigue test 26
6.10 Back fatigue test 26
6.11 Leg forward static load test 27
6.12 Leg sideways static load test 27
6.13 Diagonal base load test 28
6.14 Seat impact test 29
6.15 Back impact test 29
6.16 Arm impact test 30
6.17 Drop test 31
6.18 Test for castors 32
6.19 Test for ergonomics of seating intended for use at a workstation, desk or table 32

Annex A (informative) Notes to purchasers 34

Annex B (informative) Quality verification of seating 35

Annex C (normative) Dimensions of seating types 36
Amdt 2

Bibliography 45
Amdt 2

©SABS. Licensed exclusively to Stephen Shole; License ID : B2S3-3T8G-LXOL.
Copying and network storage prohibited.
You can make one paper copy of the standard; No paper copy may be photocopied or reproduced in any way.

This page is intentionally left blank

©SABS. Licensed exclusively to Stephen Shole; License ID : B2S3-3T8G-LXOL.
Copying and network storage prohibited.
You can make one paper copy of the standard; No paper copy may be photocopied or reproduced in any way.

Furniture

Part 1:
Seating

1 Scope

This part of SANS 1528 specifies the characteristics of seating. It covers the stability, strength and durability of seating other than school and outdoor seating. Ergonomic features of seating intended for use at a workstation, desk or table are covered. Requirements for the use of low-flammable textile fabrics are included. The toxicity aspect of the materials used in the manufacture of seating has not been taken into account (see annex A).

NOTE It is recommended that cognizance be taken of foreign standards when export of furniture is to be considered.

2 Normative references

The following referenced documents are indispensable for the application of this document. For dated references, only the edition cited applies. For undated references, the latest edition of the referenced document (including any amendments) applies. Information on currently valid national and international standards can be obtained from the SABS Standards Division. **Amdt 1**

SANS 657-4, *Steel tubes for non-pressure purposes – Part 4: Steel tubes of round, oval, square and rectangular section for furniture.* **Amdt 2**

SANS 883/ISO 5999, *Flexible cellular polymeric materials – Polyurethane foam for load-bearing applications excluding carpet underlay – Specification.* **Amdt 2**

SANS 929*, Plywood and composite board.* **Amdt 2**

SANS 1274, *Coatings applied by the powder-coating process.* **Amdt 2**

SANS 1292*, Castors for furniture.* **Amdt 2**

SANS 1324*, Upholstery fabrics.* **Amdt 2**

SANS 1423-3, *Performance requirements for textile fabrics of low flammability – Part 3: Upholstery fabrics*.

SANS 2409/ISO 2409, *Paints and varnishes – Cross-cut test*. **Amdt 1**

SANS 5870, *Hardness of vulcanized rubbers of hardness 30-95 IRH degrees*.

SANS 7253/ISO 7253, *Paints and varnishes – Determination of resistance to neutral salt spray (fog)*. **Amdt 1**

SANS 50312/EN 312*, Particleboards – Specifications.* **Amdt 2**

©SABS. Licensed exclusively to Stephen Shole; License ID : B2S3-3T8G-LXOL.
Copying and network storage prohibited.
You can make one paper copy of the standard; No paper copy may be photocopied or reproduced in any way.

3 Definitions

For the purposes of this part of SANS 1528, the following definitions apply:

3.1
acceptable
acceptable to the authority administering this standard, or to the parties concluding the purchase contract, as relevant **Amdt 1**

3.2
surface finish
external wear surface of seating, which includes the following:

a) paint or lacquer applied to metal, timber or timber-based sheet materials;

b) PVC, paint, paper foil or plastics laminate; and

c) material that has an integral finish

3.3
wings
side pieces at the top of seating against which the sitter's head can be rested

4 Requirements

4.1 Grades

Seating shall be of one of the following grades, constructed in accordance with acceptable fabrication practice:

a) domestic grade;

b) office grade; or

c) institutional grade.

NOTE This part of SANS 1528 lays down different requirements for different grades of seating. For example, institutional grade seating has to be stronger than domestic grade seating, but this does not preclude the use of domestic grade seating in an institution. The actual situation in which an item of seating is to be used should be the basis on which a purchaser decides which grade of seating to use. For example, in a domestic situation a purchaser may need seating for use in a study and in a family room. The purchaser may decide to use domestic grade seating in the study and office grade seating in the family room. The choice of grade is a matter of personal preference; the object of this part of SANS 1528 is to assist the purchaser to reach a sound decision.

4.2 Materials, castors and hazards

4.2.1 Dimensions

Seating dimensions shall be in accordance with annex C. **Amdt 2**

4.2.2 Materials **Amdt 2**

The following materials used in the construction of seating shall comply with relevant requirements of applicable South African National Standards (See also bibliography.): **Amdt 2**

– timber and timber derivatives;

©SABS. Licensed exclusively to Stephen Shole; License ID : B2S3-3T8G-LXOL.
Copying and network storage prohibited.
You can make one paper copy of the standard; No paper copy may be photocopied or reproduced in any way.

– metal;

– paint;

– powder coatings;

– varnish;

– nickel/chromium coatings;

– upholstery fabrics;

– foam; and

– high-pressure and low-pressure decorative laminates.

If there is no applicable South African National Standard, the standard or specification with which the material complies shall be such as to be acceptable.

4.2.3 Castors

Amdt 2

When castors are tested in accordance with 6.18,

a) there shall be no excessive wear of the moving parts such that the wheel touches any part of the castor assembly other than the parts that it is intended to touch,

b) the free movement around the axle shall not be affected,

c) there shall be no cracks in the castor assembly,

d) the plug shall not fall out of its socket, and

e) the castor shall not collapse.

4.2.4 Hazards

Amdt 2

Seating shall be so constructed that

a) movable and adjustable parts cannot cause injuries and cannot be unintentionally removed,

b) there are no holes or openings such as open-ended tubes, or crevices or loose washers in which fingers or flesh could become trapped or injured,

c) all corners, edges and projecting parts are sufficiently smooth not to be capable of causing a wound or an abrasion or damage to clothing, and

d) any lubricated parts are so protected that the clothing of a user of the seating cannot come into contact with the lubricant.

4.3 Surface finish

4.3.1 Appearance

All surfaces shall be free of warp. The appearance of all surface finishes shall be such as to be acceptable.

©SABS. Licensed exclusively to Stephen Shole; License ID : B2S3-3T8G-LXOL.
Copying and network storage prohibited.
You can make one paper copy of the standard; No paper copy may be photocopied or reproduced in any way.

4.3.2 Performance

When seating is tested in accordance with 6.2, the performance rating of painted or lacquered surface finishes shall be at least equal to that given in table 1, appropriate to the grade of seating.

Table 1 — Minimum performance ratings for surface finishes

1	2	3
Property	**Minimum performance rating**	
	Domestic grade	**Other than domestic grade**
Cross-cutting coefficient	8	10
Resistance to salt fog	No sign of rust after 100 h	

4.4 Stability

When seating is tested in accordance with 6.3, it shall not overbalance.

4.5 Strength and durability

When seating is tested in accordance with 6.5 to 6.17 (inclusive), at the appropriate test level given in table 2, there shall be

a) no fracture or cracking of any member, component or joint (including seat suspensions, castors and structural shells),

b) no loosening of joints intended to be rigid, shown to be permanent by means of hand pressure applied to suitable components,

c) no loosening of the underframe or loose inserts moulded into a structural shell, relative to the shell surface, shown to be permanent by means of hand pressure applied to the underframe or base,

d) no free movement of the back, legs or other components that exceeds the free movement noted in the initial inspection,

e) no deformation or wear of any part of the seating or any cracks that will adversely affect its appearance,

f) no impairment to the operation of any mechanical part (including any significant change in the seat height during any phase of test),

g) no clearly audible noise developed during testing, and

h) no tearing or splitting of upholstery.

©SABS. Licensed exclusively to Stephen Shole; License ID : B2S3-3T8G-LXOL.
Copying and network storage prohibited.
You can make one paper copy of the standard; No paper copy may be photocopied or reproduced in any way.

Table 2 — Test levels

1	2	3	4	5
Test	**Loading**	**Test level**		
		Grade of seating		
		Domestic	**Office**	**Institutional**
Seat static load Back static load Balancing load } Can be combined	Force, N 10 times Force, N Force, N	1 300 560 1 300	1 600 760 1 600	2 000 760 2 000
Arm sideways static load Wing sideways static load	Force, N Force, N 10 times	400 300	600 400	900 500
Arm downward static load	Force, N 10 times	800	900	1 000
Seat fatigue test Back fatigue test Balancing load } Can be combined	Cycles seat load 950 N Cycles back load 330 N seat load 950 N	50 000 50 000	100 000 100 000	200 000 200 000
Leg forward static load Balancing seat load	Force, N 10 times	500 1 000	620 1 250	760 1 800
Leg sideways static load Balancing seat load	Force, N 10 times	390 1 000	490 1 250	760 1 800
Diagonal base load	Force, N 10 times	375	500	620
Seat impact test	Drop height, mm 10 times	180	240	300
Back impact test Arm impact test	Height, mm Angle, degrees 10 times	210 38	330 48	620 68
Drop test				
— Stackable chairs and stools or chairs and stools of special design with legs or pedestals longer than 200 mm	Drop height, mm 10 times at 10°	450	600	900
— Non-stackable chairs with castors or swivelling glides with legs or pedestals longer than 200 mm	Drop height, mm 10 times at 10°	200	300	450
— Chairs and stools with legs or pedestals shorter than 200 mm	Drop height, mm	100	150	250

4.6 Ergonomics of seating intended for use at a workstation, desk or table

NOTE Incorrect seating of workers contributes to fatigue and consequent inefficiency. The following requirements apply to seating but, to ensure that fatigue is minimized, the ergonomics of the seating and the work surface with which it is intended to be used should be considered together. Even though no requirements are given for seating other than that used at a workstation, desk or table (because the choice of that seating tends to be based on aesthetic appeal), all seating should be ergonomically designed.

4.6.1 Dimensions

When seating intended for use at a workstation, desk or table is measured in accordance with 6.19, the dimensions shall be as illustrated in figure 1 and as given in table 3.

©SABS. Licensed exclusively to Stephen Shole; License ID : B2S3-3T8G-LXOL.
Copying and network storage prohibited.
You can make one paper copy of the standard; No paper copy may be photocopied or reproduced in any way.

Table 3 — Dimensions of seating intended for use at a workstation, desk or table

1	2
Measuring position	**Dimensions** mm
Seat	
A Seat height: Chair with fixed-height seat	440
Chair with adjustable-height seat, minimum range of adjustment	420 to 500*
B Effective seat depth:	
Chair with fixed back	380 min. 430 max.
Chair with adjustable back,	380 min. 470 max.
minimum range of adjustment	380 to 420*
B_1 Seat pad depth	380 min.
C Seat width	400 min.
α Slope of seat in relation to the horizontal	0° to 5°**
Back	
W Vertical height of *X* above *Z*:	
Chair with fixed backrest	210 ± 15
Chair with adjustable backrest,	170 min. 250 max.
minimum range of adjustment	170 to 230*
V Vertical height of area of essential lumbar support having *X* at its centre)	100 min.
F Width of area of essential lumbar support:	
General-purpose chair	360 min.
Machine operator's chair	360 min. 400 max.
U Horizontal curvature of lumbar support, radius	400 min.
Armrest (if fitted)	
G Height of armrests above point *Z* of seat	200 min. 250 max***
G_1 Inside distance between armrests	460 min. 525 max.
G_2 Set back of armrest in relation to front of seat	100 min.
G_3 Length of armrests	200 min.
G_4 Width of armrests	40 min.

* The range of adjustment provided shall include at least the specified minimum range, but may be greater.
** Preferred angle 3° ± 1°.
*** Preferred height 215 mm min., 230 mm max.

©SABS. Licensed exclusively to Stephen Shole; License ID : B2S3-3T8G-LXOL.
Copying and network storage prohibited.
You can make one paper copy of the standard; No paper copy may be photocopied or reproduced in any way.

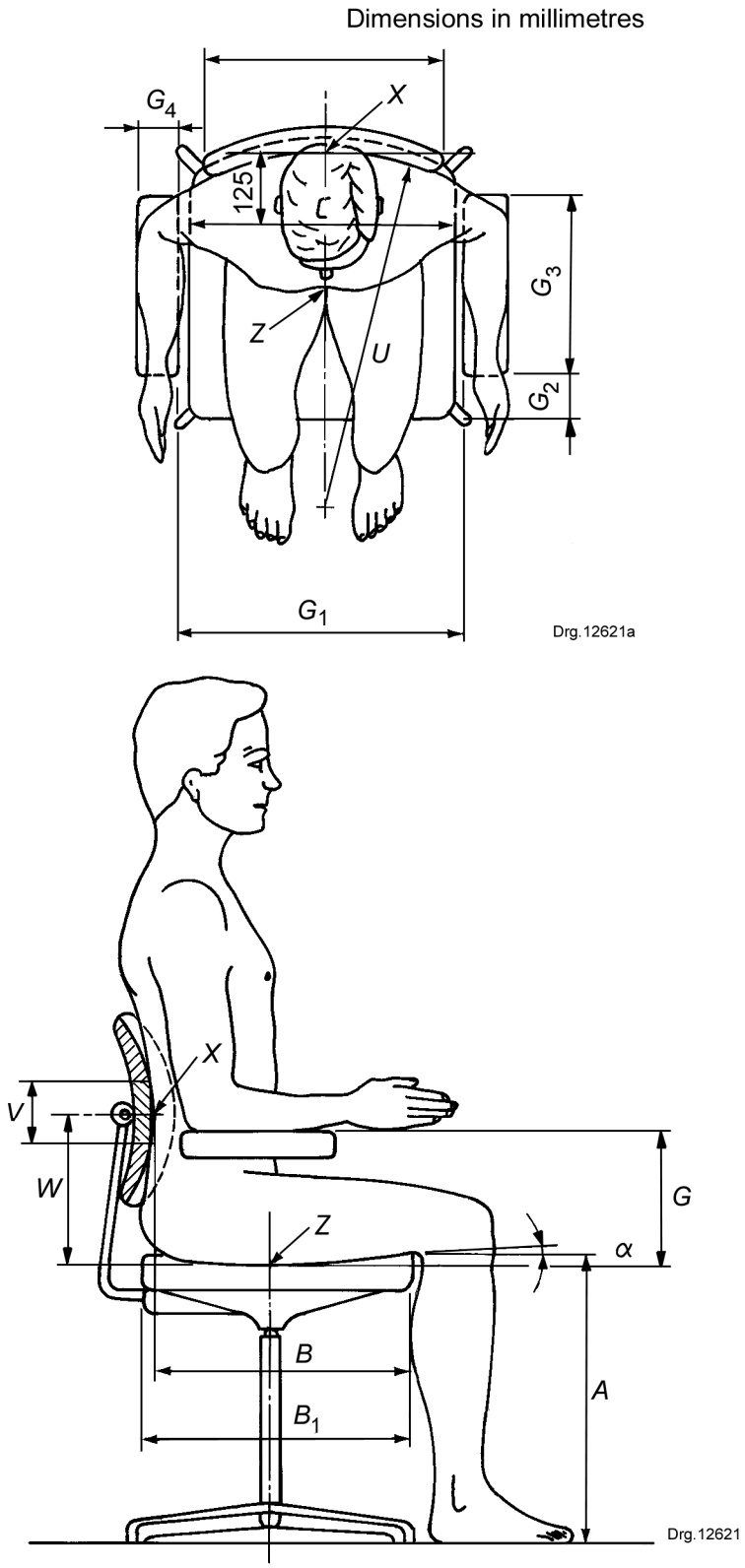

Figure 1 — Dimensions of seating intended for use at a workstation, desk or table

©SABS. Licensed exclusively to Stephen Shole; License ID : B2S3-3T8G-LXOL.
Copying and network storage prohibited.
You can make one paper copy of the standard; No paper copy may be photocopied or reproduced in any way.

4.6.2 Seat

A seat shall be flat, but may have a slight transverse curve if no part of the seat is higher than 25 mm above any other part. The upper surface of the front edge of a seat shall be resilient or rounded or have a waterfall front feature. Unpadded and unupholstered seats shall slope down from front to back by not more than 5°.

4.6.3 Backrest

A backrest shall be so designed as to provide lumbar support and to leave space for movement of the buttocks and shoulder blades.

NOTE Backrests should be padded or upholstered.

4.7 Flammability

It is recommended that textile fabrics used in the manufacture of seating comply with the requirements of SANS 1423-3. (See also 5.2(g).)

SANS 1423-3 covers two categories of low-flammable upholstery fabric.

Category 1 fabric can be used over normal foams whereas a category 2 fabric has to be used in conjunction with either a flame-retardant barrier fabric between the upholstery fabric and the foam or with a low-flammable foam.

NOTE Legislation will govern when low-flammable textile fabrics must be used for seating.

5 Marking

5.1 Adhesive label

Each item of seating shall bear the following information on a durable and legible adhesive label stuck to the underside of the seating:

a) the manufacturer's name, trade name or trade mark;

b) the grade of seating (see 4.1);

c) the model identification number; and

d) the batch identification number.

5.2 Swing ticket

Each item of seating shall have a swing ticket firmly attached to it. The information on the ticket shall be printed in the largest typeface practicable and expressed as simply as possible. The following information shall be given:

a) the manufacturer's name, trade name or trade mark;

b) the grade of seating (see 4.1);

c) the model identification and the batch identification;

d) a list of the materials used in the manufacture of the seating (including the type of flame retardant used, when applicable) that comply with the requirements of the South African National Standards, together with a list of the relevant South African National Standards (See also (e) below.);

©SABS. Licensed exclusively to Stephen Shole; License ID : B2S3-3T8G-LXOL.
Copying and network storage prohibited.
You can make one paper copy of the standard; No paper copy may be photocopied or reproduced in any way.

e) a separate list of the materials (type and make) used in the manufacture of the seating that do not comply with the requirements of a South African National Standard, together with the full identification of the standard or specification with which they do comply;

f) if the seating is to be assembled by the purchaser, full instructions (including diagrams) indicating exactly how the seating is to be assembled; and

g) if textile fabrics are used in the seating, one of the following statements:

1) "THE FABRICS USED IN THIS SEATING COMPLY WITH THE REQUIREMENTS OF SANS 1423-3 FOR LOW-FLAMMABLE TEXTILE FABRICS" (see (d) above); or

2) "THE FABRICS USED IN THIS SEATING DO NOT COMPLY WITH THE REQUIREMENTS OF SANS 1423-3 FOR LOW-FLAMMABLE TEXTILE FABRICS" (see (e) above).

5.3 Care and maintenance

The following information (which may be given on an adhesive label or on a permanent label fixed, for example, to the base of a cushion seam, or on a separate information sheet) should be provided to enable the end user to keep the item of seating in a clean and serviceable condition:

a) if the use of certain cleaning materials could cause permanent damage to the seating, a warning to this effect, and the action to be taken to avoid this possibility;

b) the recommended method of cleaning exposed surfaces and textile fabrics;

c) the correct methods to be used for major cleaning operations;

d) the percentage fibre content of the fabric and type of foam used; and

e) any recommended maintenance procedures.

6 Inspection and methods of test

6.1 Inspection

Visually examine each item of seating for compliance with the requirements of this part of SANS 1528 for which tests to assess compliance are not given in 6.2 to 6.19 inclusive.

6.2 Tests on surface finish

6.2.1 Cross-cutting coefficient

Use SANS 2409. **Amdt 1**

6.2.2 Resistance to salt fog

Use SANS 7253 and carry out the test for 100 h. **Amdt 1**

6.3 Tests for stability

6.3.1 Preparation of seating

If the seating is adjustable in any way, adjust it to the most adverse position for testing.

©SABS. Licensed exclusively to Stephen Shole; License ID : B2S3-3T8G-LXOL.
Copying and network storage prohibited.
You can make one paper copy of the standard; No paper copy may be photocopied or reproduced in any way.

6.3.2 Apparatus

Use the following apparatus for the tests given in 6.3.3 to 6.3.7 inclusive:

6.3.2.1 Small seat-loading pad as illustrated in figure 2.

6.3.2.2 Eleven loading discs, each of diameter 350 mm, of thickness 48 mm and of mass 10 kg.

6.3.2.3 Means of supporting the loading discs at a specified distance from the intersection point of the seat and the back of the chair, and of mass not exceeding 2,5 kg.

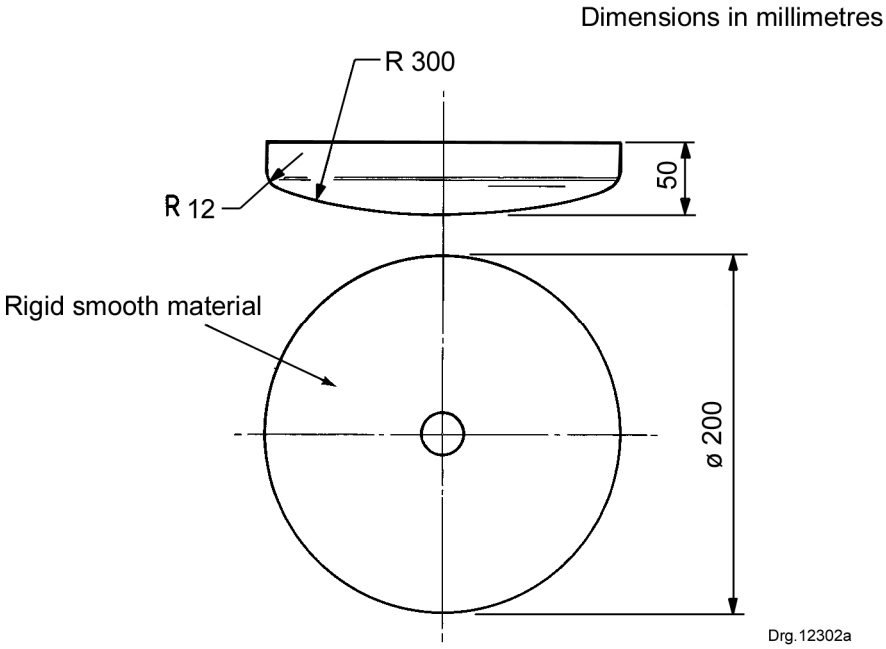

Figure 2 — Small seat-loading pad

6.3.3 Stability of upright seating

NOTE Upright seating includes seating on which people can sit with their backs erect and against the back of the seating. It also includes such seating as reclining seating when the back of the seat can be locked in an upright position. **Amdt 1**

6.3.3.1 For seating without arms, use the small seat-loading pad to apply a vertical force of 950 N to any part of the seating in an attempt to cause the seating to overbalance. Check for compliance with 4.4.

6.3.3.2 For seating with arms, use the small seat-loading pad to apply a vertical force of 600 N to the seating and simultaneously apply a vertical force of 600 N to one of the arms. So position the forces that the seating is likely to overbalance. Check for compliance with 4.4.

6.3.4 Stability of tilting seating

So load the fully tilted seating with the 11 loading discs that they are stacked against the back of the seating (see figure 3). Check for compliance with 4.4.

©SABS. Licensed exclusively to Stephen Shole; License ID : B2S3-3T8G-LXOL.
Copying and network storage prohibited.
You can make one paper copy of the standard; No paper copy may be photocopied or reproduced in any way.

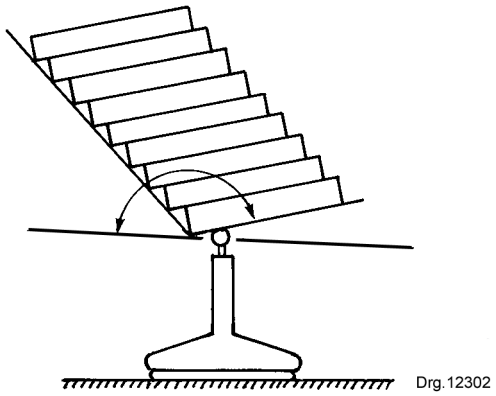

Figure 3 — Test for stability of tilting seating

6.3.5 Stability of rocking chairs

So load the rocking chair with the 11 loading discs that they are stacked against and secured to the back of the chair (see figure 4). Rock the chair forwards as far as possible, but not past the position where the back is vertical. Allow the chair to rock back freely. Check for compliance with 4.4.

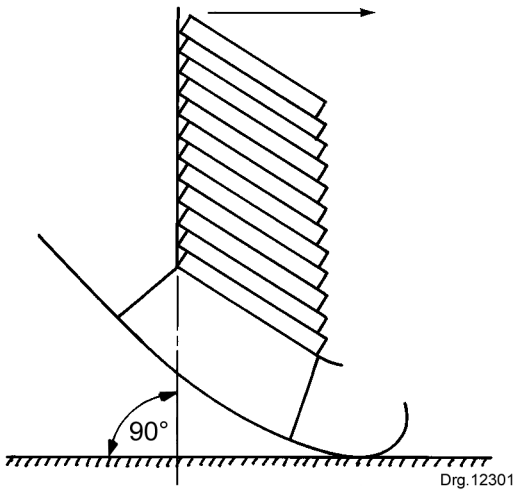

Figure 4 — Test for stability of rocking chairs

6.3.6 Stability of reclined seating with footrest

Load the seating with the 11 loading discs in the arrangement illustrated in figure 5. Use the dimension *X* (shown in the figure) as given in table 4, appropriate to the angle of the back *Θ*. Check for compliance with 4.4.

©SABS. Licensed exclusively to Stephen Shole; License ID : B2S3-3T8G-LXOL.
Copying and network storage prohibited.
You can make one paper copy of the standard; No paper copy may be photocopied or reproduced in any way.

Table 4 — Dimensions for stability test of reclining seating with footrest

1	2
Angle of back *Θ* degrees	**Dimension *X*** mm
0	614
10	564
20	515
30	464
40	392

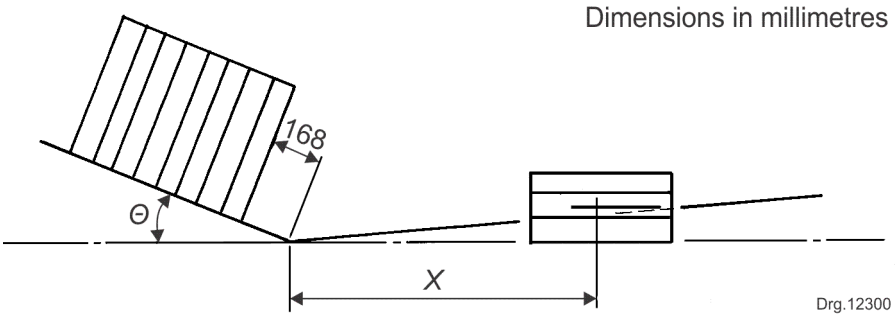

Figure 5 — Test for stability of reclining seating with footrest

6.3.7 Stability of reclining seating without footrest

Load the seating with the 11 loading discs in the arrangement illustrated in figure 6. Use dimension *Y* (shown in the figure) as given in table 5, appropriate to the angle of the back *Θ*. Check for compliance with 4.4.

Table 5 — Dimensions for stability test of reclining seating without footrest

1	2
Angle of back *Θ* degrees	**Dimension *Y*** mm
0	474
10	424
20	375
30	252
40	194

©SABS. Licensed exclusively to Stephen Shole; License ID : B2S3-3T8G-LXOL.
Copying and network storage prohibited.
You can make one paper copy of the standard; No paper copy may be photocopied or reproduced in any way.

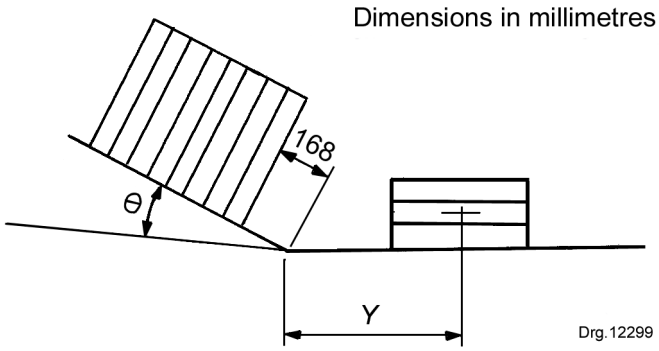

Figure 6 — Test for stability of reclining seating without footrest

6.4 General conditions for tests for strength and durability

6.4.1 Preparation of seating

NOTE Ensure that no seating is tested until at least four weeks after manufacture, since adhesives need time to achieve their full strength.

Assemble any seating that needs to be assembled in accordance with the manufacturer's instructions. If the seating can be assembled in more than one way, assemble it in the most adverse way for testing.

6.4.2 Apparatus

Use the following apparatus, as applicable, for the procedure in 6.4.4 and the tests given in 6.5 to 6.17 (inclusive):

6.4.2.1 Rubber mat of thickness 2 mm and of hardness 95 IRH degrees (determined in accordance with SANS 5870), laid on a level concrete floor.

6.4.2.2 Stops designed to prevent the seating under test from sliding but not from tilting. The height of the stops is the lowest that can be used to prevent sliding.

6.4.2.3 Large seat-loading pad as illustrated in figure 7.

6.4.2.4 Small seat-loading pad as illustrated in figure 2.

6.4.2.5 Back-loading pad as illustrated in figure 8.

6.4.2.6 Two local-loading pads as illustrated in figure 9.

6.4.2.7 Polyether foam of thickness 25 mm, used to cover each loading pad.

6.4.2.8 Seat impacter as illustrated in figure 10.

6.4.2.9 Impact hammer as illustrated in figure 11.

6.4.2.10 Seat-loading position template as illustrated in figures 12 and 13.

6.4.2.11 Load such that the mass of the template plus the load is equal to 20 kg.

©SABS. Licensed exclusively to Stephen Shole; License ID : B2S3-3T8G-LXOL.
Copying and network storage prohibited.
You can make one paper copy of the standard; No paper copy may be photocopied or reproduced in any way.

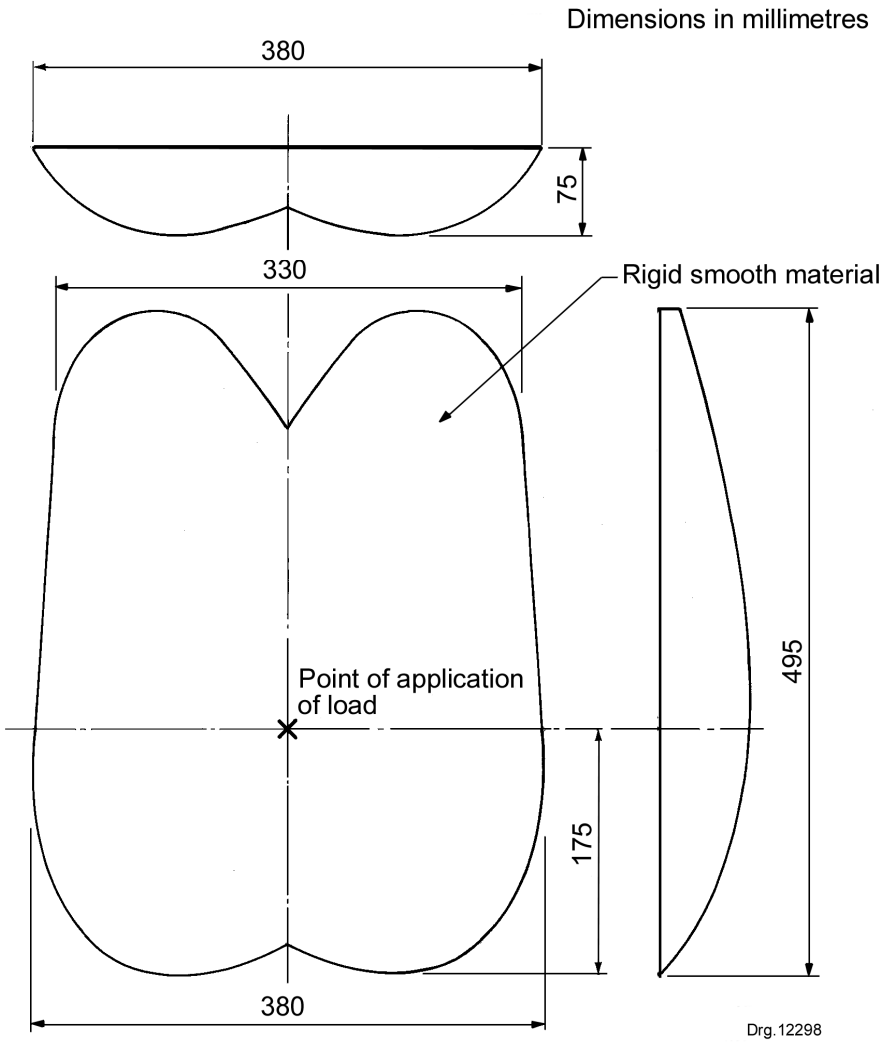

a) Plan **b) Side elevation**

Figure 7 — Large seat-loading pad

©SABS. Licensed exclusively to Stephen Shole; License ID : B2S3-3T8G-LXOL.
Copying and network storage prohibited.
You can make one paper copy of the standard; No paper copy may be photocopied or reproduced in any way.

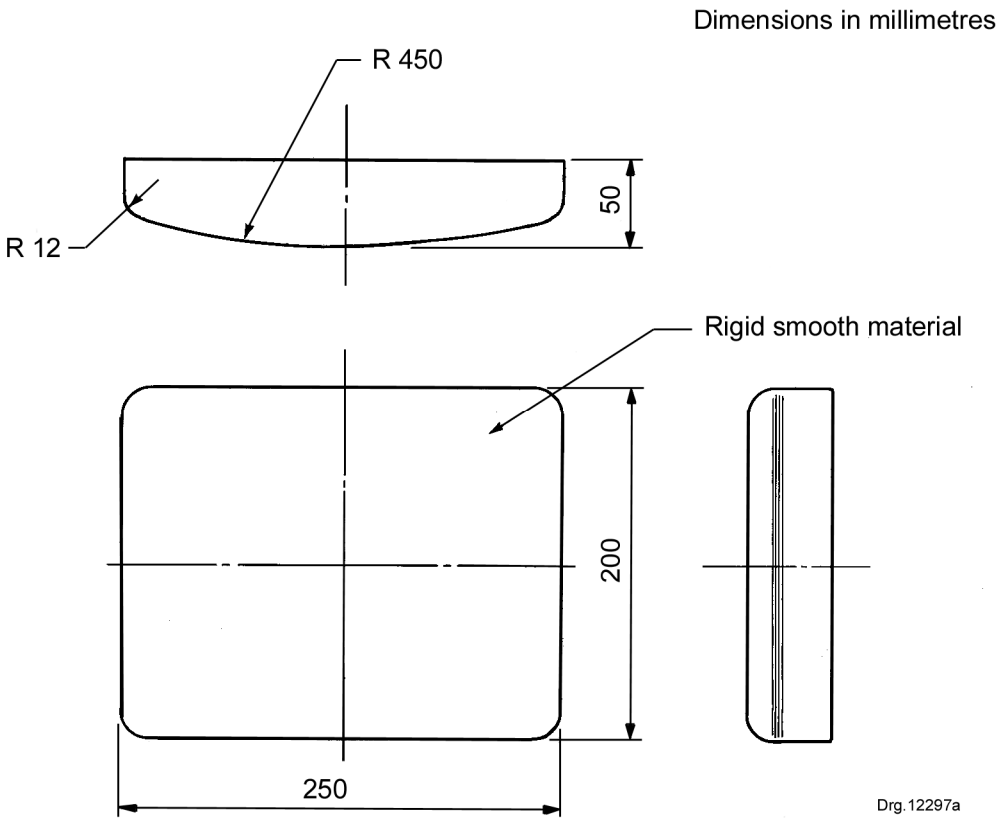

Figure 8 — Back-loading pad

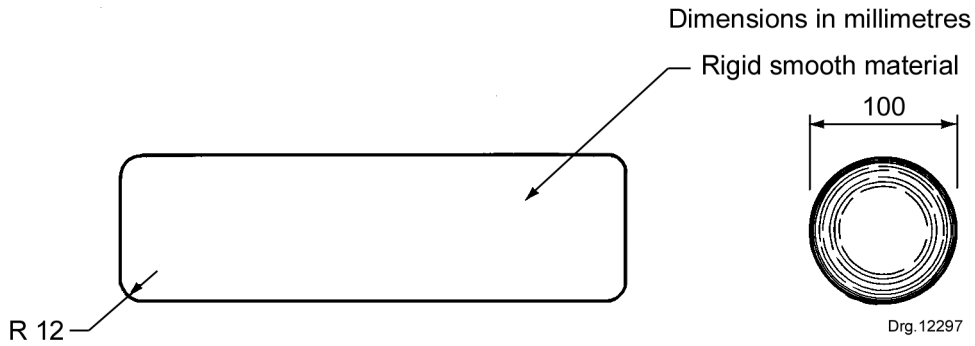

Figure 9 — Local-loading pad

©SABS. Licensed exclusively to Stephen Shole; License ID : B2S3-3T8G-LXOL.
Copying and network storage prohibited.
You can make one paper copy of the standard; No paper copy may be photocopied or reproduced in any way.

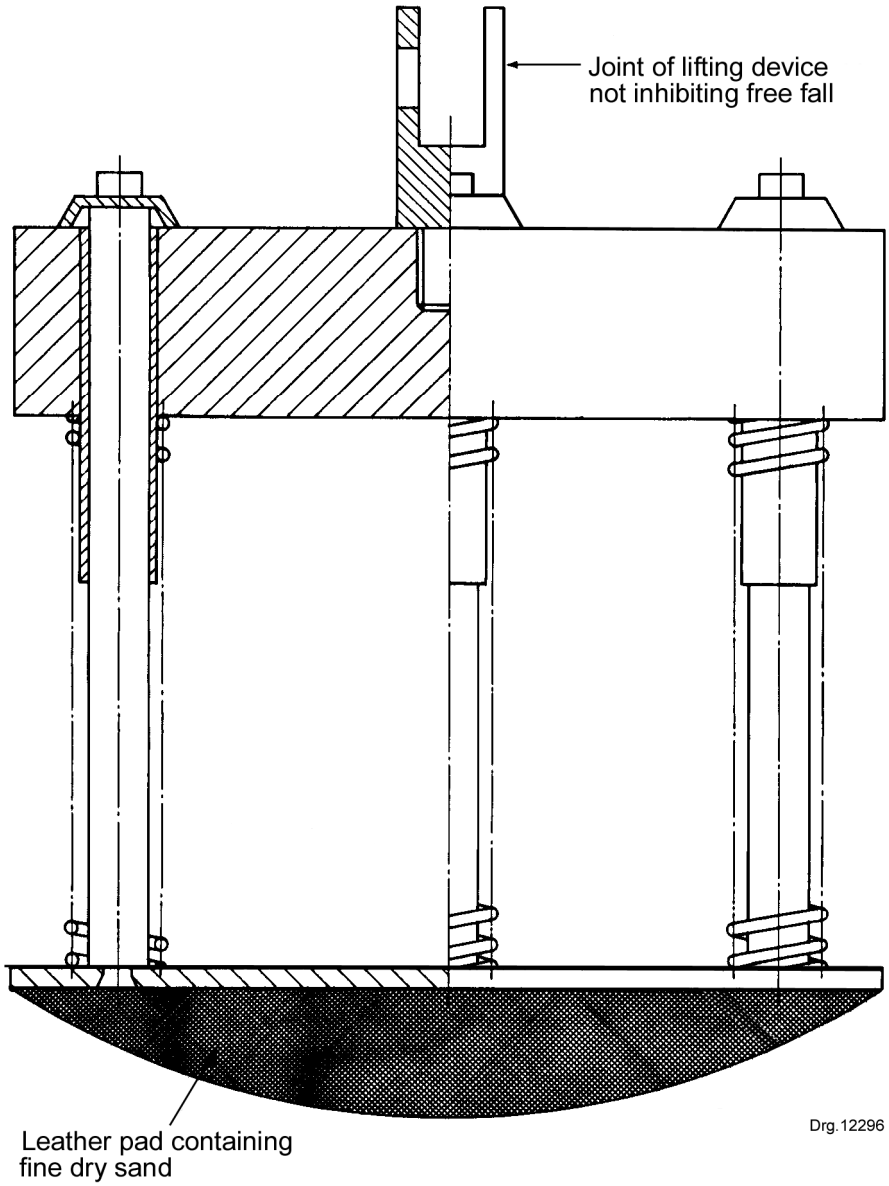

NOTE 1 Total mass is 25,0 kg ± 0,1.

NOTE 2 Diameter is 200 mm.

NOTE 3 Spring rate of combined spring system is 0,69 kg/mm ± 0,10 kg/mm.

NOTE 4 Total friction resistance of moving parts is 0,025 kg to 0,45 kg.

NOTE 5 Spring system compressed to initial load of 104,0 kg ± 0,4 kg (amount of spring available from initial compression to fully closed is at least 60 mm).

Figure 10 — Seat impacter

©SABS. Licensed exclusively to Stephen Shole; License ID : B2S3-3T8G-LXOL.
Copying and network storage prohibited.
You can make one paper copy of the standard; No paper copy may be photocopied or reproduced in any way.

Dimensions in millimetres

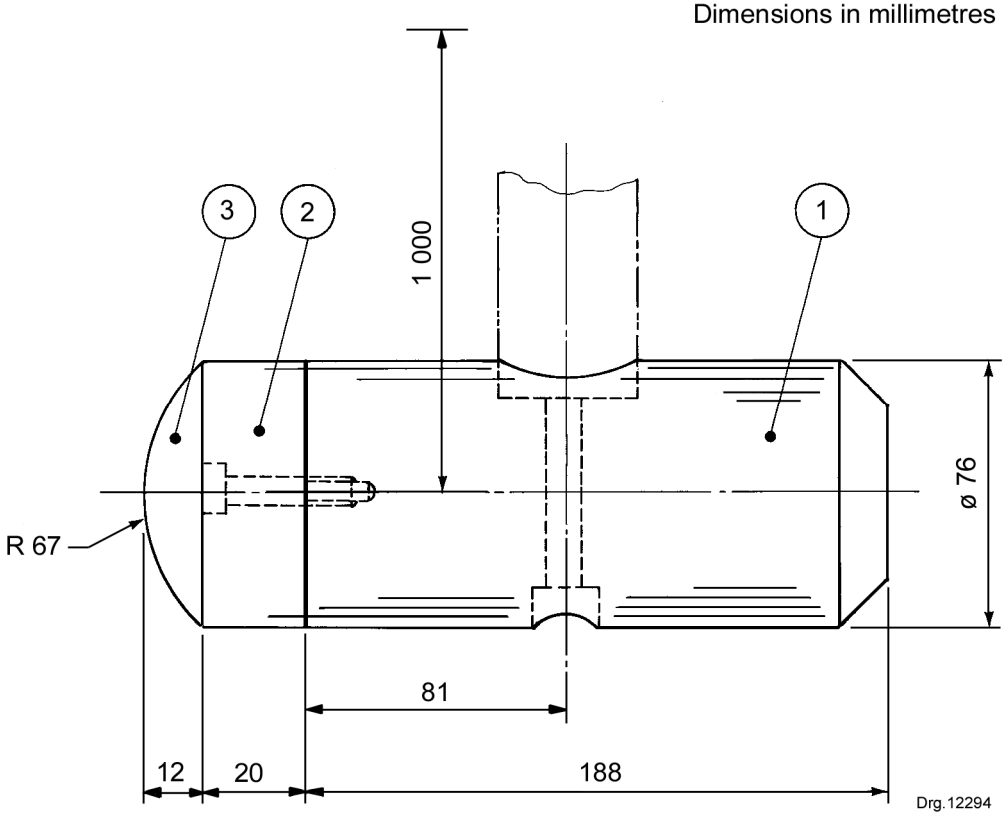

Key

1 pendulum head, mild steel
2 hardwood
3 rubber 50° shore

NOTE Total mass of impact hammer = 6,5 kg.

Figure 11 — Impact hammer

©SABS. Licensed exclusively to Stephen Shole; License ID : B2S3-3T8G-LXOL.
Copying and network storage prohibited.
You can make one paper copy of the standard; No paper copy may be photocopied or reproduced in any way.

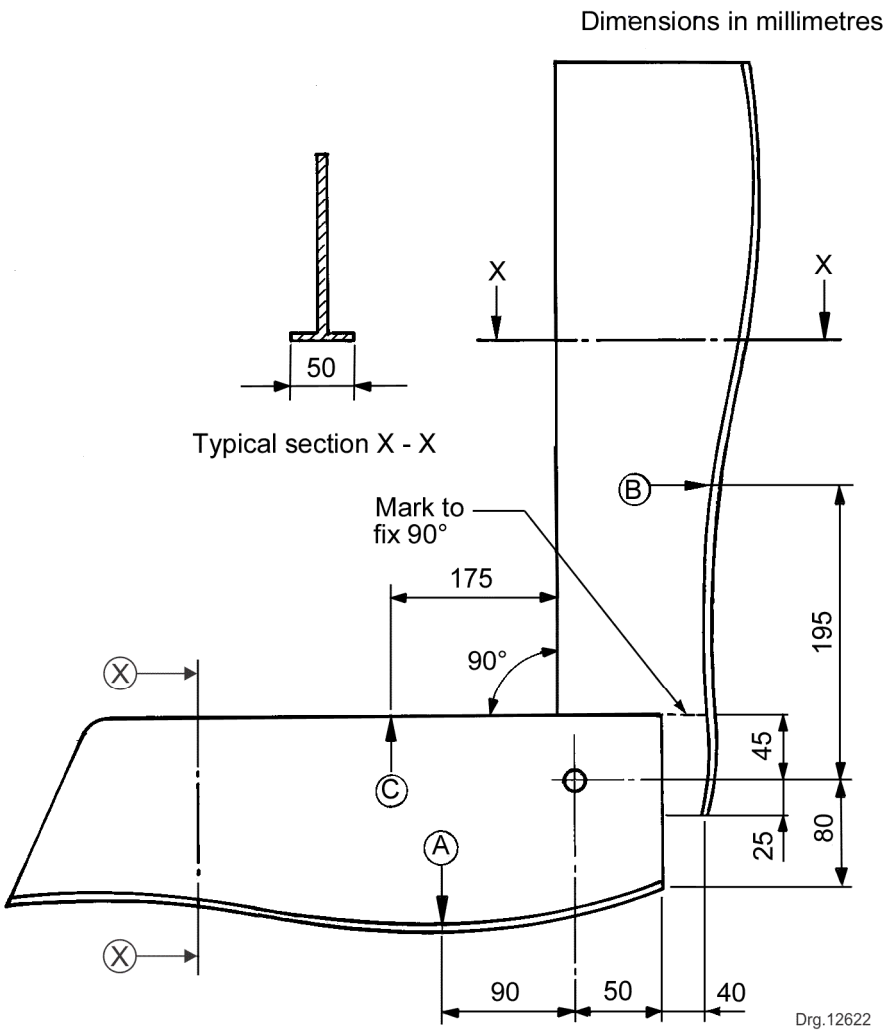

Key

A seat load marking (chairs)
B back load marking (chairs)
C seat load marking (stools)

Figure 12 — Seat-loading position template

©SABS. Licensed exclusively to Stephen Shole; License ID : B2S3-3T8G-LXOL.
Copying and network storage prohibited.
You can make one paper copy of the standard; No paper copy may be photocopied or reproduced in any way.

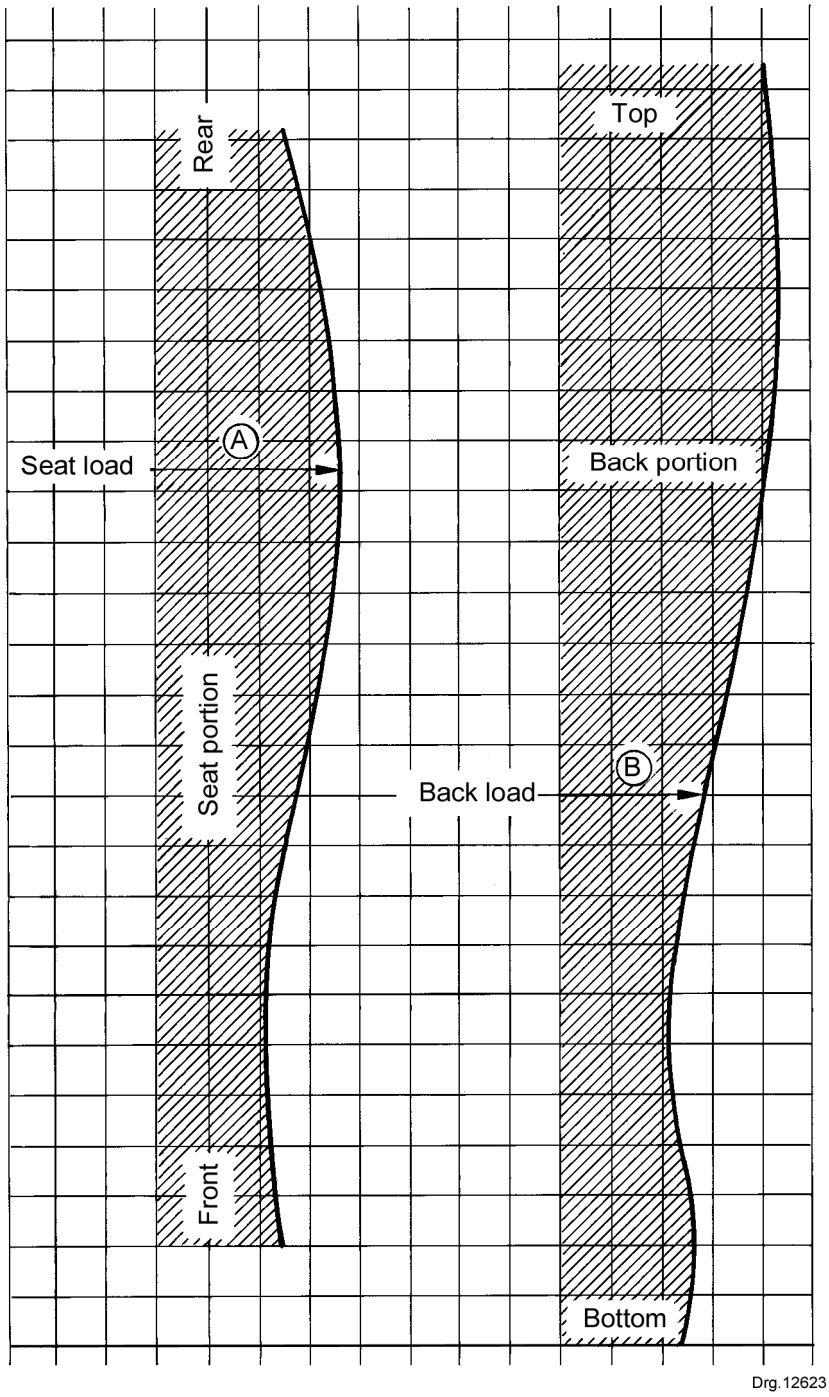

Figure 13 — Profile of loading surface of seat-loading position template

©SABS. Licensed exclusively to Stephen Shole; License ID : B2S3-3T8G-LXOL.
Copying and network storage prohibited.
You can make one paper copy of the standard; No paper copy may be photocopied or reproduced in any way.

6.4.3 Initial examination of seating

Before testing, carefully examine and note the item to be tested so that at the end of the testing for strength and durability (see 6.5 to 6.18), compliance with the requirements of 4.5 can be assessed.

6.4.4 Determination of seat-loading and back-loading positions

Using the seat-loading position template (6.4.2.10) and the load (6.4.2.11), perform the procedure given below to determine the seat-loading and back-loading positions applicable to the tests given in 6.5 to 6.19, as appropriate.

6.4.4.1 So position the loaded template on the longitudinal centre-line of the seating that the seat portion is as far towards the rear of the seating as possible.

6.4.4.2 So push the back portion of the template as to suit the profile of the chair. This action will lever the seat portion forward (see figure 14(a)).

6.4.4.3 Mark the seating at the required seat-loading positions marked A and B on the template (see figure 12).

6.4.4.4 For stools, set the portions of the template at 90° to each other and mark the seating at the seat-loading position marked C on the template (see figure 12 and figure 14(b)).

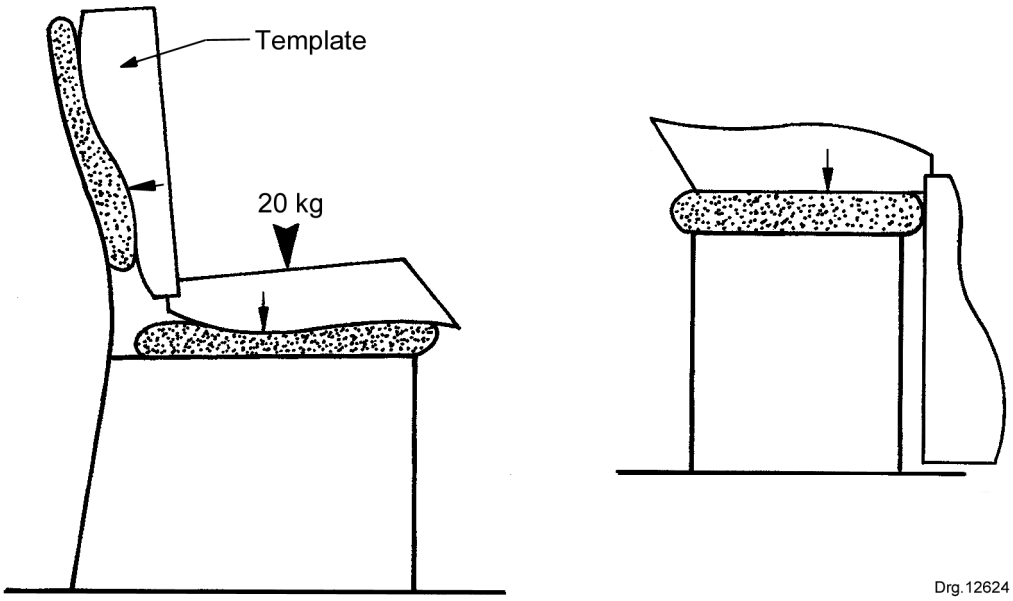

a) Chair **b) Stool**

Figure 14 — Determination of loading positions

6.5 Seat static load test

6.5.1 Determine the seat-loading position in accordance with 6.4.4, using the template, and mark the seat at this position.

©SABS. Licensed exclusively to Stephen Shole; License ID : B2S3-3T8G-LXOL.
Copying and network storage prohibited.
You can make one paper copy of the standard; No paper copy may be photocopied or reproduced in any way.

6.5.2 In the case of chairs, mark a second seat-loading position 100 mm back from the front edge of the seat. In the case of stools, determine the second seat-loading position by using the template to measure from the opposite side of the stool.

6.5.3 At the first seat-loading position, apply the appropriate force given in table 2, using an appropriate seat-loading pad and maintaining the force for 10 s (see figure 15). Do the test 10 times in all.

6.5.4 Repeat the test at the second seat-loading position and at any position that appears weak.

6.5.5 If the seating has a footrest or footrail, repeat the test at the centre of the footrest or footrail.

6.5.6 Check for compliance with 4.5.

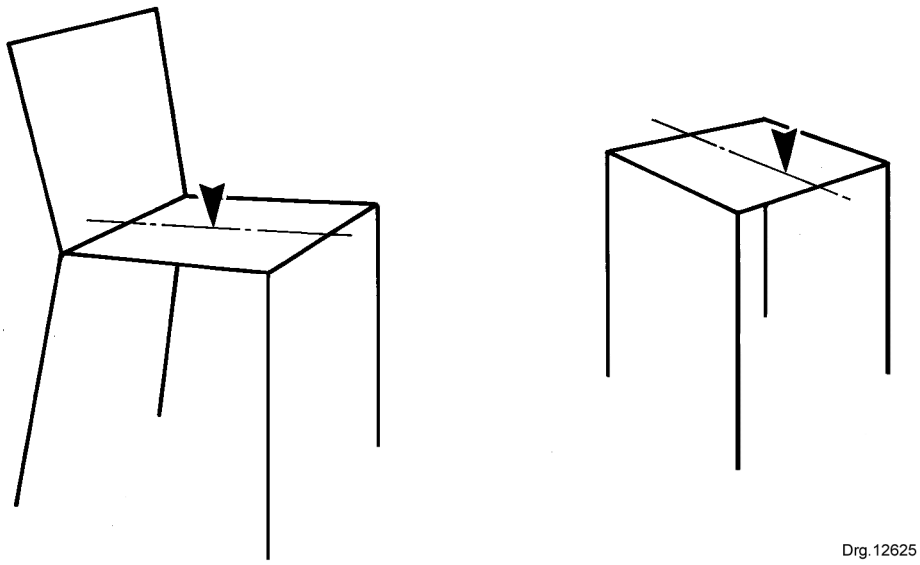

a) Chair **b) Stool**

Figure 15 — Seat static load test

6.6 Back static load test

6.6.1 General

During this test, the position at which the load is applied has to be determined. In some seating it may not be possible to apply the load at the determined position because of openings in the back of the seating. In such a situation, use a board to distribute the load over any back members of the seating excluding upright members on the side. If the seating has a tilting mechanism, so adjust the seating that the back is at an angle of 15° ± 5° to the vertical. If the seating has no back or a very low one, carry out the test by applying the force to the edge of the seating (see figure 16(b)).

6.6.2 Procedure

6.6.2.1 Determine the back-loading position as follows:

– use the template in accordance with 6.4.4;

– measure 100 mm down from the top of the back of the seating; and

– choose the lower of the two positions, then mark the seating at this position.

©SABS. Licensed exclusively to Stephen Shole; License ID : B2S3-3T8G-LXOL.
Copying and network storage prohibited.
You can make one paper copy of the standard; No paper copy may be photocopied or reproduced in any way.

6.6.2.2 Determine the seat-loading position in accordance with 6.4.4, using the template.

6.6.2.3 Place the back legs against the stops to prevent the seating from moving backwards and apply the appropriate balancing load as given in table 2 to the seat-loading position, using the large seat-loading pad.

6.6.2.4 Determine the initial position of the centre of the top of the back so that any relative deflection of the back of the seating (marked *d* in figure 16(a)) during the test can be determined at the end of the test.

6.6.2.5 Apply the appropriate force given in table 2 to the back of the seating for 10 s (see figure 16(a)), using the back-loading pad. If the seating overbalances while the force is being applied, increase the balancing load just sufficiently to prevent overbalancing.

6.6.2.6 While the load is being applied, measure the relative deflection of the back of the seating.

6.6.2.7 Reapply the force a further nine times and, while the force is being applied for the last time, again measure the relative deflection of the back of the seating.

6.6.2.8 Check for compliance with 4.5.

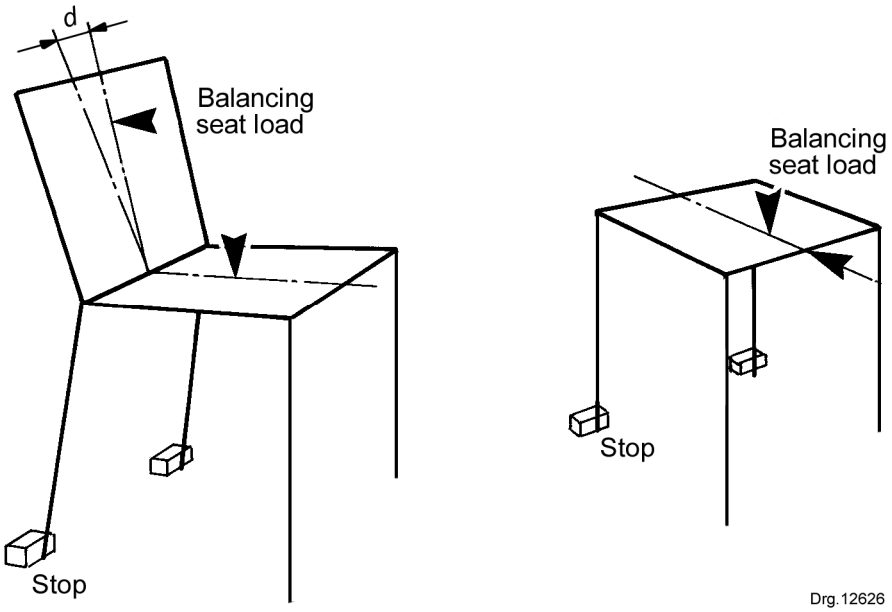

a) Chair **b) Stool**

Figure 16 — Back static load test

6.7 Arm and wing sideways static load test

6.7.1 Determine the loading positions by selecting positions on the arms and wings that are most likely to fail, and mark the seating at these positions.

6.7.2 Use the local-loading pads to apply the appropriate outward forces given in table 2 to the arms and to the wings a total of 10 times, maintaining the force for 10 s each time (see figure 17).

6.7.3 Check for compliance with 4.5.

©SABS. Licensed exclusively to Stephen Shole; License ID : B2S3-3T8G-LXOL.
Copying and network storage prohibited.
You can make one paper copy of the standard; No paper copy may be photocopied or reproduced in any way.

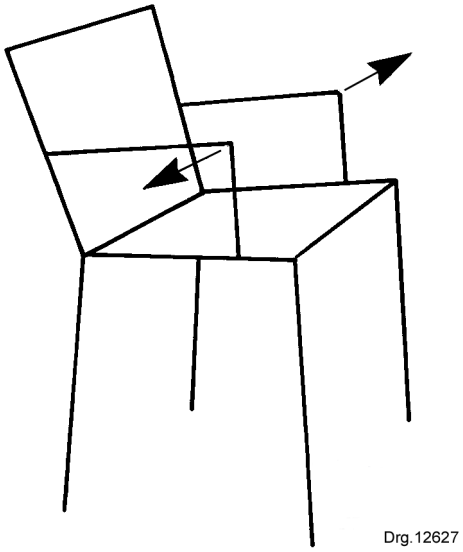

Figure 17 — Arm and wing sideways static load test

6.8 Arm downward static load test

6.8.1 Determine the loading positions by selecting positions on the arms that are most likely to fail, and mark the seating at these positions.

6.8.2 Use the small seat-loading pad to apply the appropriate downward force given in table 2 a total of 10 times, maintaining the force for 10 s each time (see figure 18).

6.8.3 If the seating overbalances while the force is being applied, use an appropriate balancing seat load to just prevent overbalancing.

6.8.4 Check for compliance with 4.5.

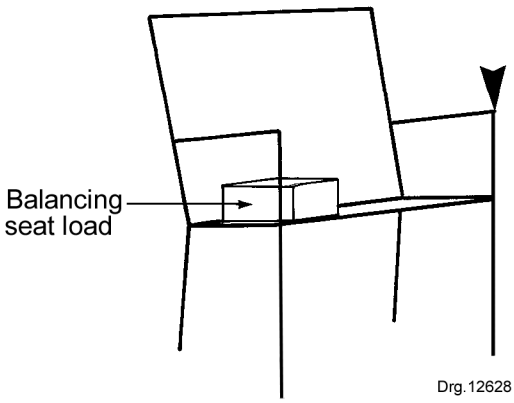

Figure 18 — Arm downward static load test

©SABS. Licensed exclusively to Stephen Shole; License ID : B2S3-3T8G-LXOL.
Copying and network storage prohibited.
You can make one paper copy of the standard; No paper copy may be photocopied or reproduced in any way.

6.9 Seat fatigue test

6.9.1 Determine the seat-loading position in accordance with 6.4.4, using the template, and mark the seating at this position.

6.9.2 Apply a force of 950 N to the seating (see figure 19), using the large seat-loading pad; while maintaining this force for 10 s, determine the lowest position of the loading pad.

6.9.3 Reapply the force the appropriate number of cycles given in table 2 at a rate not exceeding 40 cycles per minute. During the last cycle, again determine the lowest position of the loading pad.

6.9.4 Take the difference between the lowest positions of the loading pad at the start and end of the test as the deflection of the seating during the test.

6.9.5 Check for compliance with 4.5.

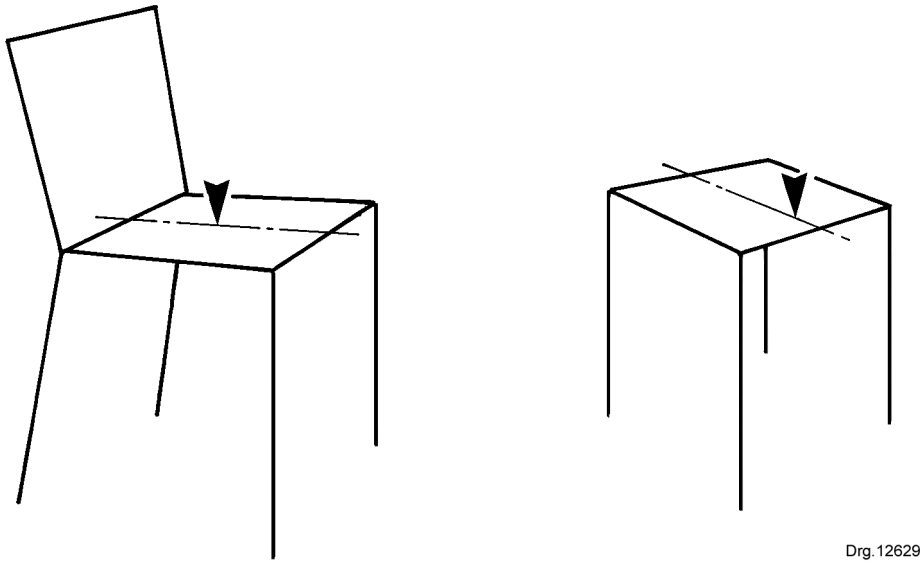

a) Chair **b) Stool**

Figure 19 — Seat fatigue test

6.10 Back fatigue test

6.10.1 Determine the back-loading and seat-loading positions in accordance with 6.4.4, using the template, and mark the seating at these positions.

6.10.2 Place the back legs against the stops to prevent the seating from moving and apply a load of 950 N, using the large seat-loading pad.

6.10.3 Apply a force of 330 N to the back of the chair for the appropriate number of cycles given in table 2 at a rate not exceeding 40 cycles per minute (see figure 20), using the back-loading pad. If the seating overbalances while the force of 330 N is being applied, reduce the force just sufficiently to prevent overbalancing.

6.10.4 Check for compliance with 4.5.

©SABS. Licensed exclusively to Stephen Shole; License ID : B2S3-3T8G-LXOL.
Copying and network storage prohibited.
You can make one paper copy of the standard; No paper copy may be photocopied or reproduced in any way.

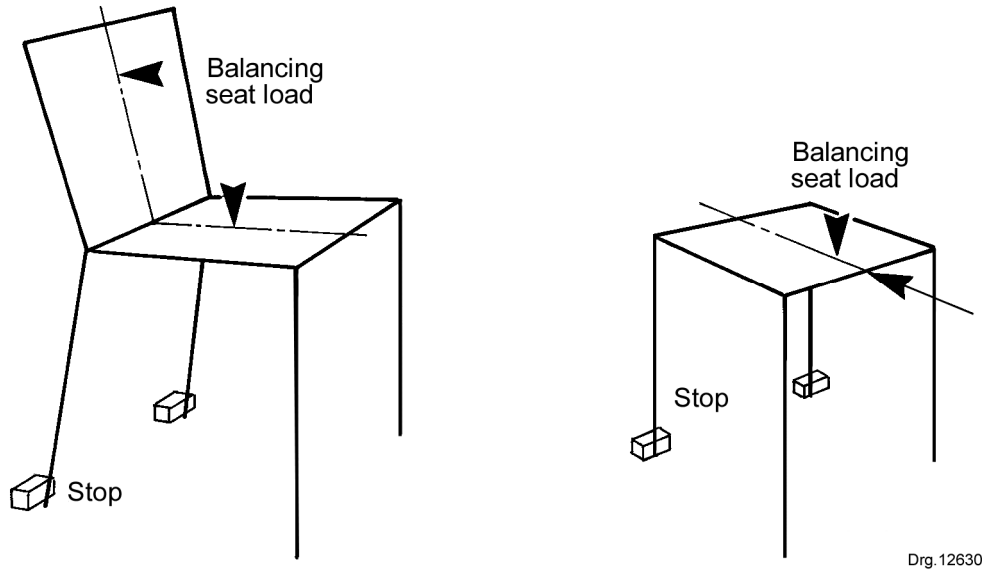

a) Chair **b) Stool**

Figure 20 — Back fatigue test

6.11 Leg forward static load test

6.11.1 Determine the seat-loading position in accordance with 6.4.4, using the template, and mark the seating at this position.

6.11.2 Place the front legs against the stops to prevent the seating from moving forward and apply the appropriate balancing load as given in table 2 to the seat-loading position, using an appropriate seat-loading pad.

6.11.3 Use a local-loading pad to apply the appropriate force given in table 2 to the centre of the back of the seating, at the level of the seat, towards the front of the seat a total of 10 times, maintaining the force for 10 s each time (see figure 21(a)). If the seating overbalances while the force is being applied, reduce the force just sufficiently to prevent overbalancing.

6.11.4 Check for compliance with 4.5.

6.12 Leg sideways static load test

Carry out the test in the same way as the leg forward static load test, but

a) turn the seating through 90°, placing the side legs against the stops (see figure 21(b)), and

b) apply the balancing load not more than 150 mm from the unloaded edge of the seating.

©SABS. Licensed exclusively to Stephen Shole; License ID : B2S3-3T8G-LXOL.
Copying and network storage prohibited.
You can make one paper copy of the standard; No paper copy may be photocopied or reproduced in any way.

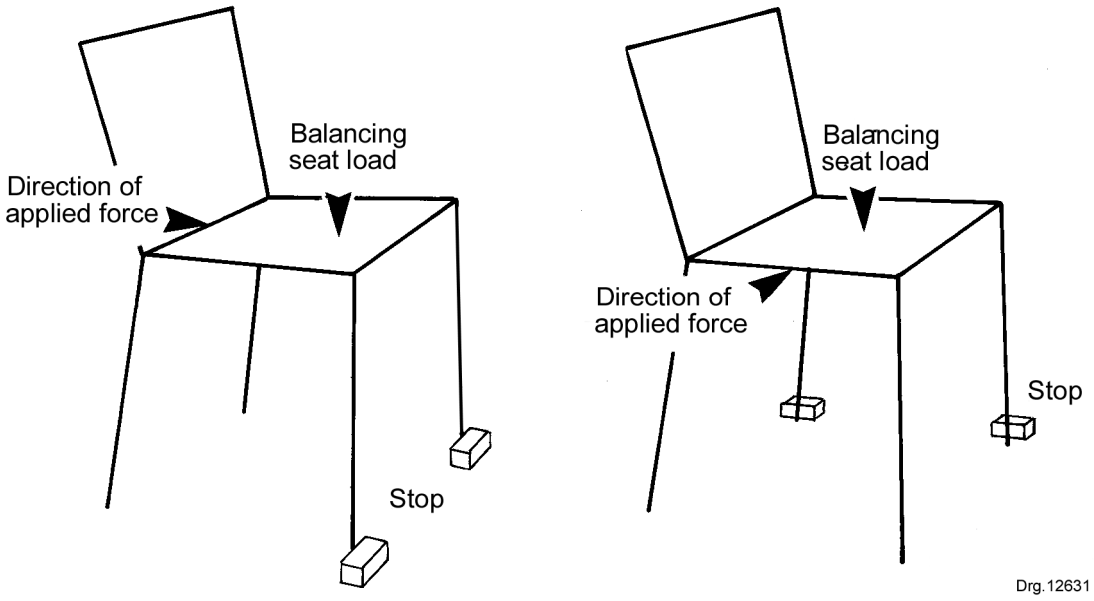

a) Leg forward **b) Leg sideways**

Figure 21 — Leg forward and sideways static load test

6.13 Diagonal base load test

NOTE This test is carried out only on those items of seating that do not have legs or pedestals.

6.13.1 At the lowest point of the seating, simultaneously apply the appropriate opposing forces given in table 2 to one pair of diagonally opposite corners of the item under test. Apply the forces a total of 10 times, maintaining the forces for 10 s each time (see figure 22).

6.13.2 Check for compliance with 4.5.

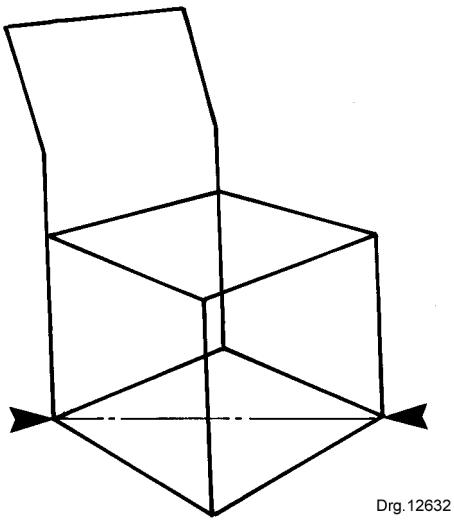

Figure 22 — Diagonal base load test

©SABS. Licensed exclusively to Stephen Shole; License ID : B2S3-3T8G-LXOL.
Copying and network storage prohibited.
You can make one paper copy of the standard; No paper copy may be photocopied or reproduced in any way.

6.14 Seat impact test

6.14.1 Place a piece of foam, as used for the loading pads, on the seating and determine the seat-loading position in accordance with 6.4.4, using the template.

6.14.2 In the case of soft upholstery, use the small-loading pad to apply a force of 20 N, and determine the position of the bottom of the loading pad. Take this position as the top surface of the seating.

6.14.3 Allow the seat impacter to fall from the appropriate height given in table 2 onto the top surface of the seating a total of 10 times (see figure 23).

6.14.4 Repeat 6.14.2 and 6.14.3 at any point that appears weak.

6.14.5 Check for compliance with 4.5.

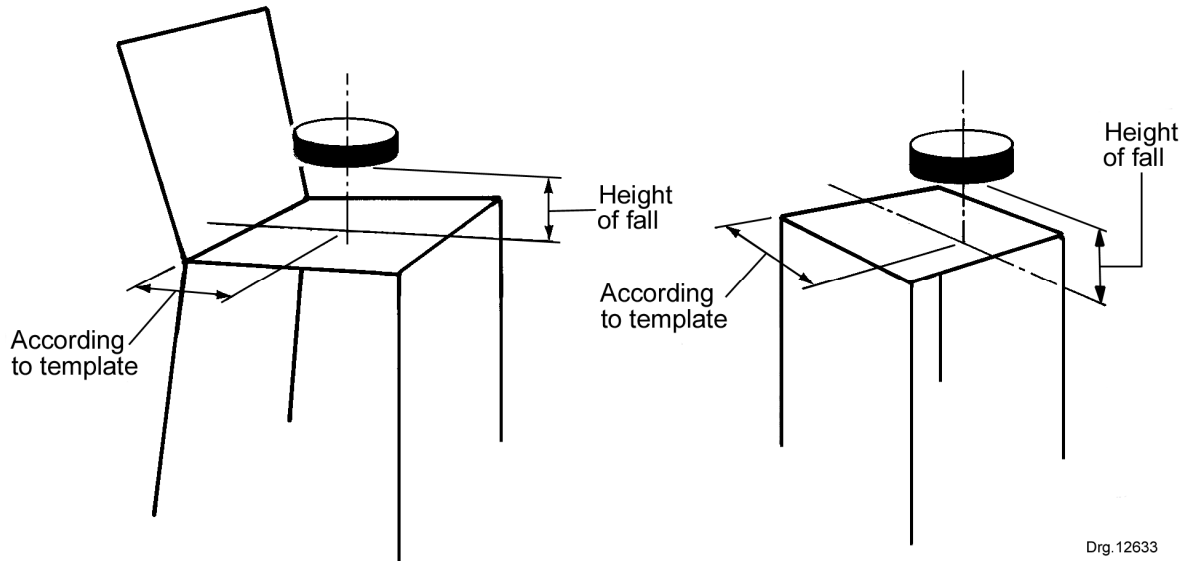

a) Chair **b) Stool**

Figure 23 — Seat impact test

6.15 Back impact test

6.15.1 Place the front legs against the stops to prevent the seating from moving forwards and, using the impact hammer, strike the seating at the centre of the top of the back a total of 10 times (see figure 24(a)), with the impact hammer falling through the appropriate vertical height given in table 2.

6.15.2 If the seating does not have a back, allow the hammer to strike the centre of the rear edge of the seating (see figure 24(b)). If the rear edge is not easily determinable, allow the hammer to strike in the direction most likely to cause overbalancing.

6.15.3 If the seating has wings,

a) so reposition the seating that the side legs are against the stops, and

©SABS. Licensed exclusively to Stephen Shole; License ID : B2S3-3T8G-LXOL.
Copying and network storage prohibited.
You can make one paper copy of the standard; No paper copy may be photocopied or reproduced in any way.

b) allow the hammer to strike the outside of the top of one wing in the position most likely to cause failure.

6.15.4 Check for compliance with 4.5.

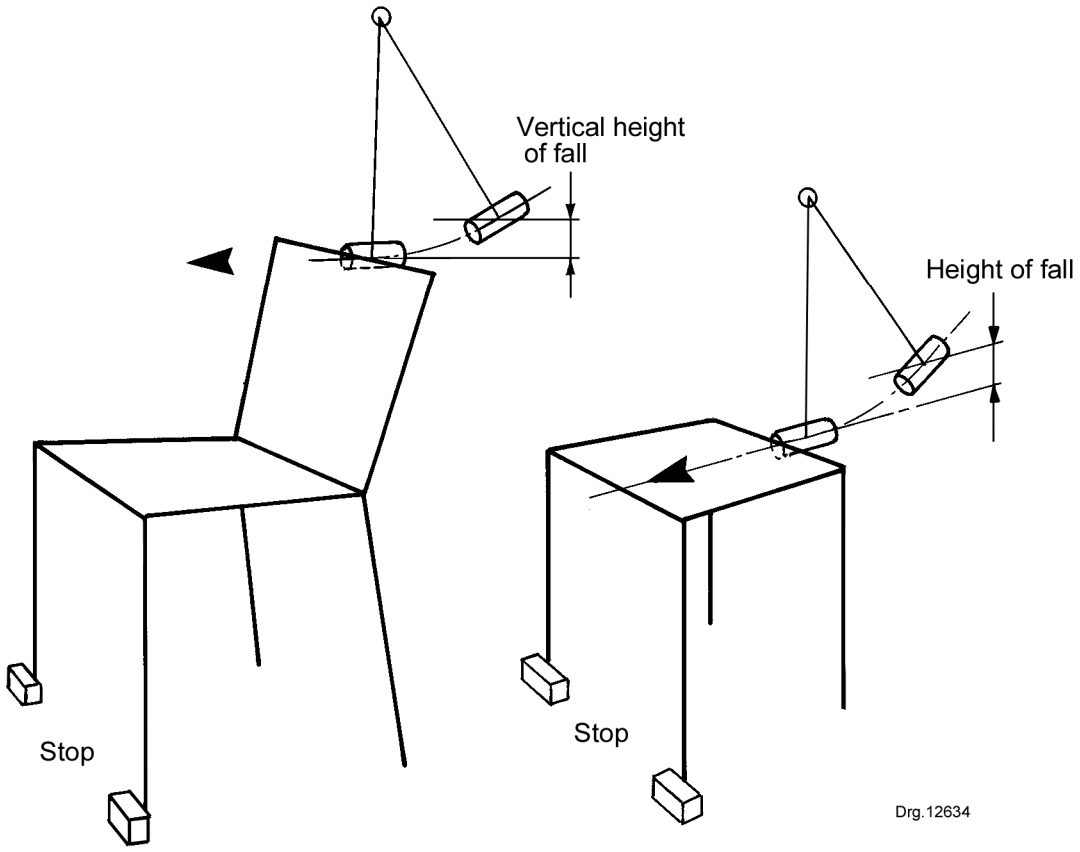

a) Chair **b) Stool**

Figure 24 — Back impact test

6.16 Arm impact test

Carry out this test in the same way as the back impact test (see 6.15), but allow the hammer to strike the outside of the one arm in the position most likely to cause failure (see figure 25).

©SABS. Licensed exclusively to Stephen Shole; License ID : B2S3-3T8G-LXOL.
Copying and network storage prohibited.
You can make one paper copy of the standard; No paper copy may be photocopied or reproduced in any way.

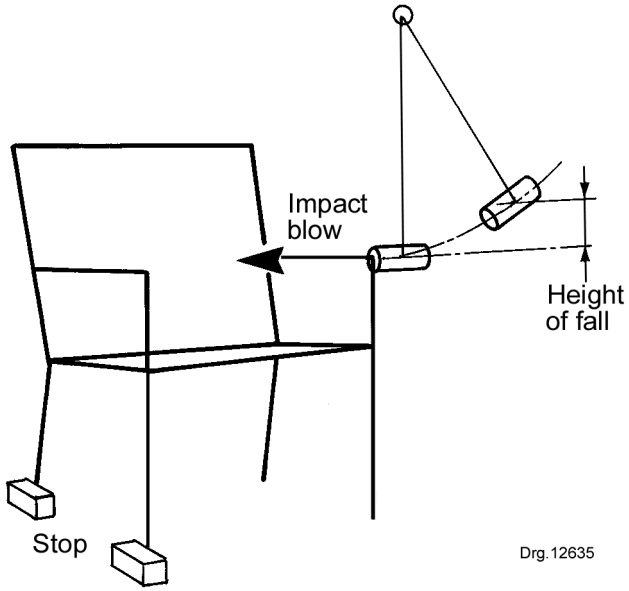

Figure 25 — Arm impact test

6.17 Drop test

6.17.1 So support the seating that, when it impacts on the floor, its orientation is as shown in figure 26.

6.17.2 Allow the seating to fall through the appropriate height given in table 2, a total of 10 times on a front leg and a total of 10 times on a rear leg.

6.17.3 Check for compliance with 4.5.

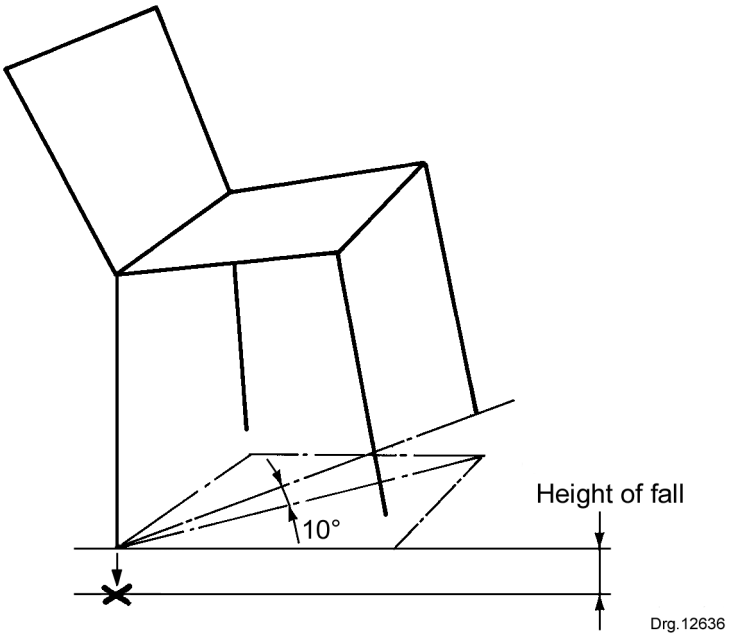

Figure 26 — Drop test

©SABS. Licensed exclusively to Stephen Shole; License ID : B2S3-3T8G-LXOL.
Copying and network storage prohibited.
You can make one paper copy of the standard; No paper copy may be photocopied or reproduced in any way.

6.18 Test for castors

6.18.1 Apparatus

6.18.1.1 Drive mechanism that turns the turntable (see 6.18.1.2) at a rate of 10 r/min, a cycle of operation consisting of 10 revolutions in one direction followed by 10 revolutions in the opposite direction.

6.18.1.2 Turntable that

– is of diameter 1,0 m, and

– is covered with carpeting, and

– has two metal bars of semi-elliptical section, each of length 450 mm, of height 10 mm and of width 60 mm, fitted along a diameter of the turntable, each bar touching the edge of the turntable.

6.18.1.3 Means of supporting the seating (or, when relevant, supporting the column of the seating into which the castors are fitted) over the centre of the turntable and applying a load of 1 250 N to the seat-loading position, using the seat-loading pad (see 6.18.1.4).

6.18.1.4 Small seat-loading pad as described in 6.4.2.4.

6.18.2 Procedure

6.18.2.1 Inspect each castor of the seating for freedom of movement around the horizontal and vertical axes and for compliance with 4.2.3. **Amdt 2**

6.18.2.2 So mount the seating on the centre of the turntable that, when the turntable rotates, the seating does not rotate.

6.18.2.3 Subject the seating to 1 000 cycles of operation (see 6.18.1.1). Each hour, inspect the castors for compliance with 4.2.3. Stop the test if any of the castors of the seating fails to comply with 4.2.3. **Amdt 2**

6.19 Test for ergonomics of seating intended for use at a workstation, desk or table

6.19.1 Apparatus

6.19.1.1 Timber plate as illustrated in figure 27.

6.19.1.2 Masspiece of mass 40 kg.

6.19.1.3 Masspiece of mass 15 kg, so notched that it can be placed on the plate with its centre of gravity over the centre of the front edge of the seating but that it will still allow measurements to be made in the same position. Two masspieces each of mass 7,5 kg could be used.

6.19.1.4 Seat-loading position template as described in 6.4.2.10.

6.19.2 Procedure

6.19.2.1 Determine the seat-loading position in accordance with 6.4.4, using the template, and mark the seating at this position.

©SABS. Licensed exclusively to Stephen Shole; License ID : B2S3-3T8G-LXOL.
Copying and network storage prohibited.
You can make one paper copy of the standard; No paper copy may be photocopied or reproduced in any way.

6.19.2.2 So position the timber plate symmetrically about the centre-line of the seating that the point Z (see figure 27), which is 100 mm from the back edge of the plate, is vertically above the seat-loading position.

6.19.2.3 So position

a) the 40 kg masspiece that its centre of gravity coincides with point Z, and

b) the 15 kg masspiece that its centre of gravity coincides with the centre of the front edge of the seating.

6.19.2.4 Measure the seating height as the distance between the floor and the underside of the plate at the centre of the front edge of the seating.

6.19.2.5 Check all the other dimensions of the seating for compliance with 4.6.

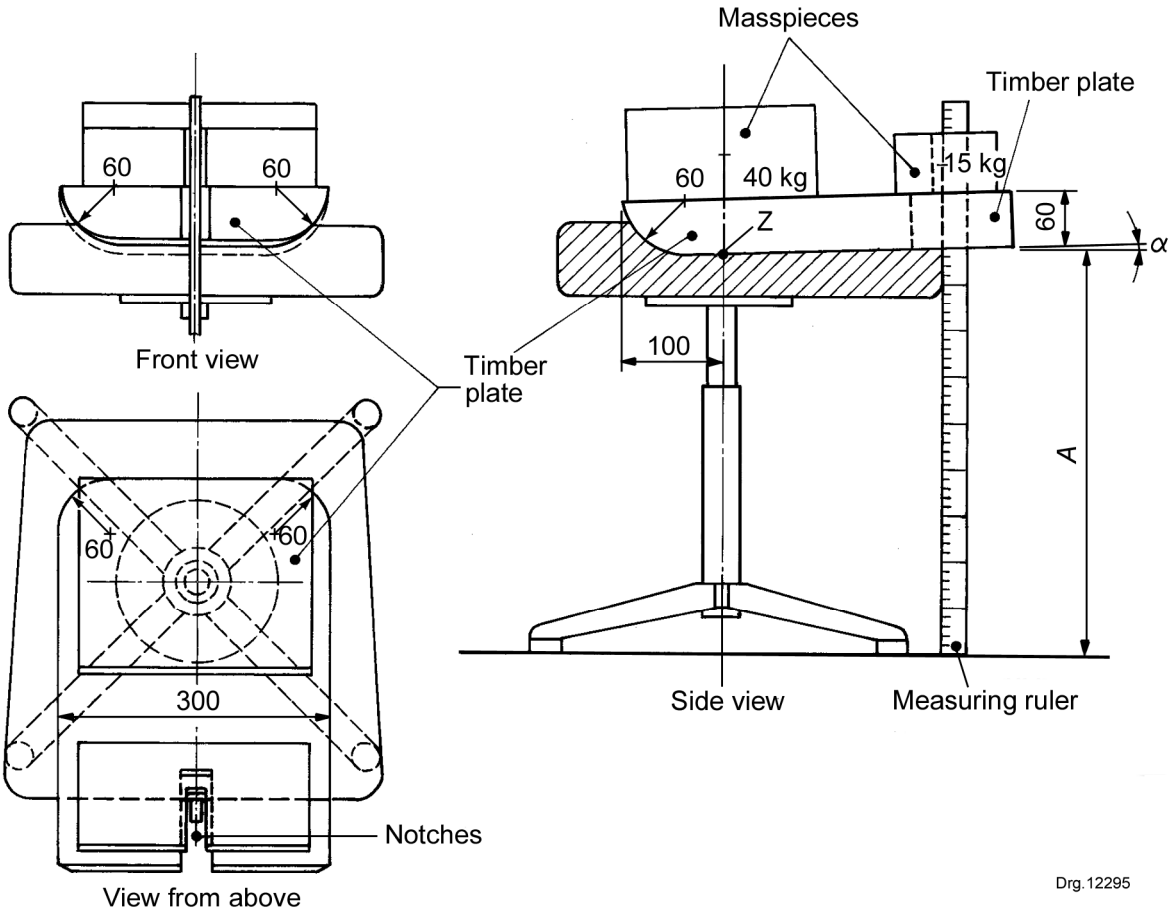

Figure 27 — Measurement of seated height

©SABS. Licensed exclusively to Stephen Shole; License ID : B2S3-3T8G-LXOL.
Copying and network storage prohibited.
You can make one paper copy of the standard; No paper copy may be photocopied or reproduced in any way.

Annex A
(informative)

Notes to purchasers

Seating that complies with the requirement of this part SANS 1528 has adequate stability, strength and durability for its intended purposes (as indicated by its allocated grade). The choice of which seating to purchase depends upon the purchaser's personal preferences, therefore, no materials have been specified. All materials that are used have, however, to comply with the requirements of an applicable standard. For example, if seating uses laminated timber, the laminated timber used in the seating has to comply with the requirements of the South African National Standard for laminated timber. However, if a material is used for which there is no applicable South African National Standard, the supplier has to identify the specification with which the material complies. The purchaser can then decide whether the use of that material satisfies his needs. Each item of seating has to have a swing ticket that identifies the materials used.

When a purchaser wishes to enter into a contract for the supply of seating, this part of SANS 1528 could be used as a basis for such a contract to ensure that the seating is functional. But the purchaser would have to further specify any features that may be offered by the manufacturer or such features as the following:

– colour;

– surface finish;

– whether the seating has to have a five-star base;

– whether castors are required;

– whether height adjustment has to be by gas action or threaded spindle;

– whether the seating has to have a tilting action;

– whether it has to be possible to lock the tilting action in multiple positions;

– whether the seating has to have a swivel action;

– whether the seating has to have armrests;

– whether the backrest is to be adjustable and hinged; and

– whether the seating is to be manufactured from non-toxic materials, e.g. for use in public environments.

The above list is not comprehensive and the purchaser should examine each type of seating to ensure that it has the required features.

©SABS. Licensed exclusively to Stephen Shole; License ID : B2S3-3T8G-LXOL.
Copying and network storage prohibited.
You can make one paper copy of the standard; No paper copy may be photocopied or reproduced in any way.

Annex B
(informative)

Quality verification of seating

When a purchaser requires ongoing verification of the quality of seating, it is suggested that, instead of concentrating solely on evaluation of the final product, he also direct his attention to the manufacturer's quality system. In this connection it should be noted that SANS 9001, covers the provision of an integrated quality system. **Amdt 1**

©SABS. Licensed exclusively to Stephen Shole; License ID : B2S3-3T8G-LXOL.
Copying and network storage prohibited.
You can make one paper copy of the standard; No paper copy may be photocopied or reproduced in any way.

Annex C
(normative)

Dimensions of seating types

The dimensions of seating types that comply with this part of SANS 1528 are shown in figures C.1 to C.9.

Dimensions in millimetres

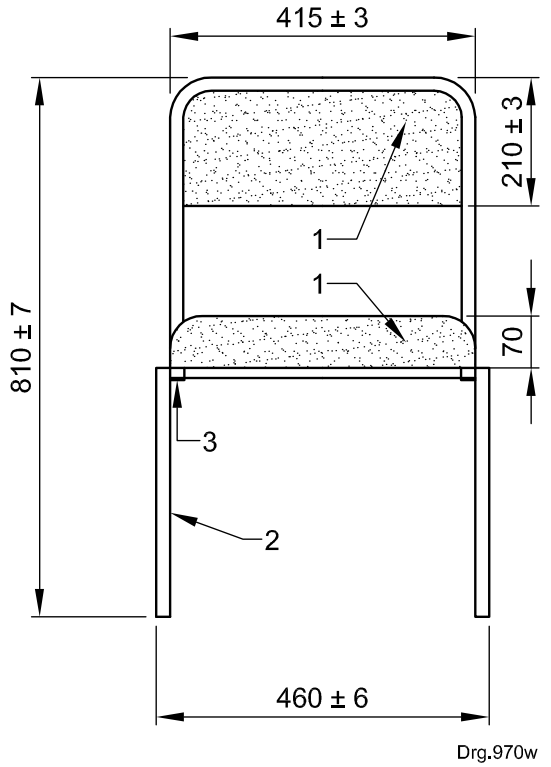

a) Front view

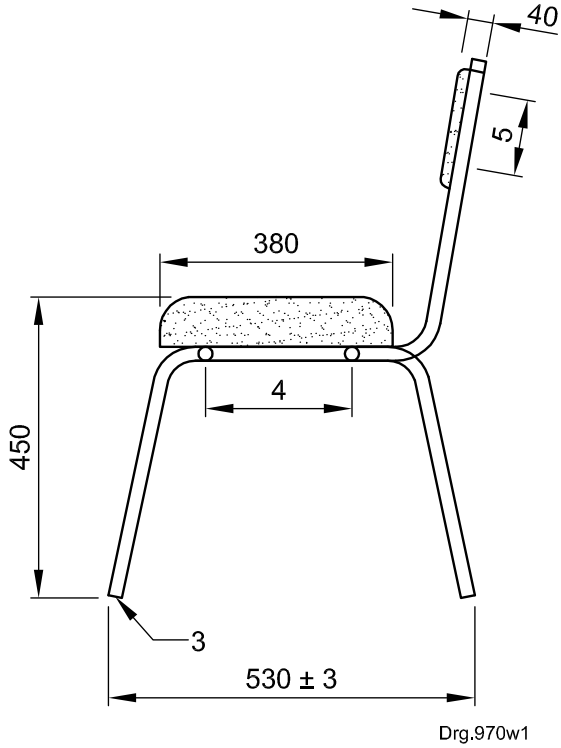

b) Side view

Key

1 seat and back foam
2 stackable steel frame
3 acceptable plug
4 acceptable screws that fit the seat to the steel frame
5 bolts and nuts that fix the back of the seat to the steel frame

The foam (seat and back) shall be in accordance with SANS 883, and shall be glued onto 16 mm particle board in accordance with SANS 50312.

The seat foam shall be 23 kg/m^3 minimum and the back foam shall be 16 kg/m^3 minimum. The upholstery shall be in accordance with SANS 1324 (100 % polypropylene in accordance with contract quality standards).

The stackable steel frame assembly shall be made from 22 mm square tubing in accordance with SANS 657-4, with a baked epoxy or polyester coating finish in accordance with SANS 1274.

The legs of the chair shall be fitted with acceptable plugs.

Figure C.1 — Upholstered rickstacker chair

Amdt 2

©SABS. Licensed exclusively to Stephen Shole; License ID : B2S3-3T8G-LXOL.
Copying and network storage prohibited.
You can make one paper copy of the standard; No paper copy may be photocopied or reproduced in any way.

Dimensions in millimetres

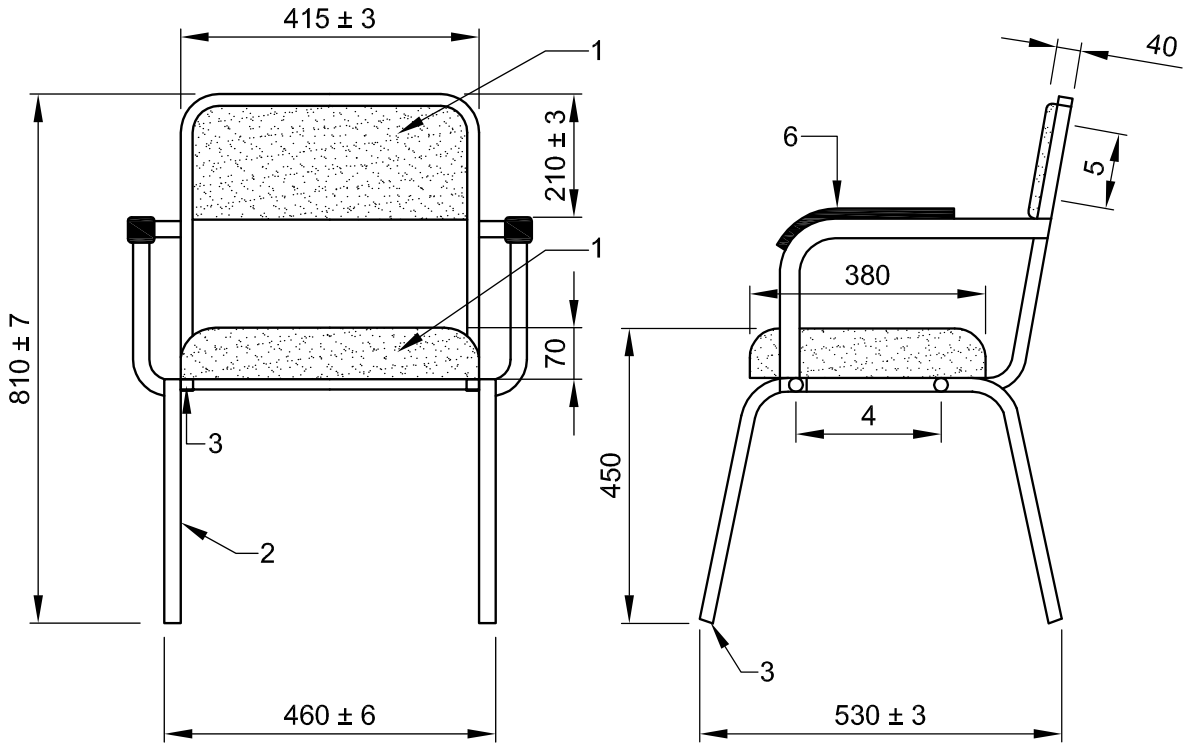

a) Front view **b) Side view**

Key

1 seat and back foam
2 stackable steel frame
3 acceptable plug
4 acceptable screws that fit the seat to the steel frame
5 bolts and nuts that fix the back of the seat to the steel frame
6 acceptable armrest

The foam shall be in accordance with SANS 883, and shall be glued onto 16 mm particle board in accordance with SANS 50312.

The seat foam shall be 23 kg/m^3 minimum and the back foam shall be 16 kg/m^3 minimum. The upholstery shall be in accordance with SANS 1324 (100 % polypropylene in accordance with contract quality standards).

The stackable steel frame assembly shall be made from 22 mm square tubing in accordance with SANS 657-4, with a baked epoxy or polyester coating finish manufactured in accordance with SANS 1274.

The legs of the chair shall be fitted with acceptable plugs.

Figure C.2 — Upholstered teacher's chair with armrests

Amdt 2

©SABS. Licensed exclusively to Stephen Shole; License ID : B2S3-3T8G-LXOL.
Copying and network storage prohibited.
You can make one paper copy of the standard; No paper copy may be photocopied or reproduced in any way.

Dimensions in millimetres

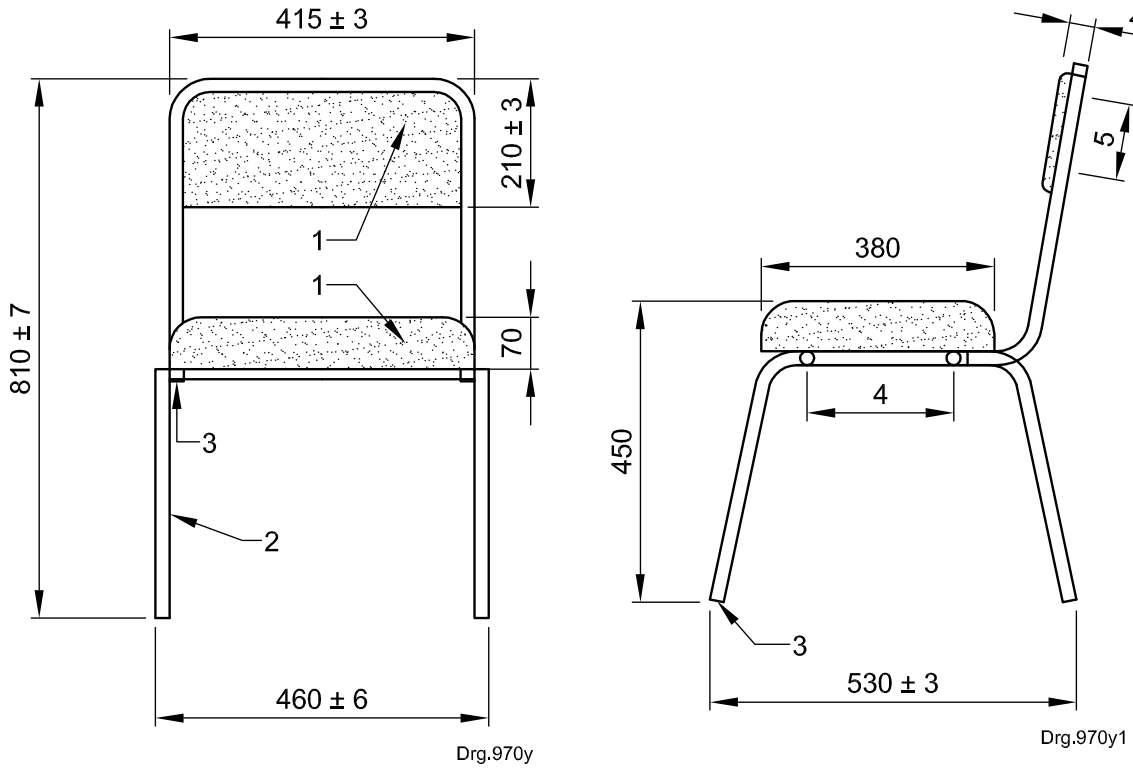

a) Front view **b) Side view**

Key

1 seat and back foam
2 stackable steel frame
3 acceptable plug
4 acceptable screws that fit the seat to the steel frame
5 bolts and nuts that fix the back of the seat to the steel frame

The foam shall be in accordance with SANS 883, and shall be glued onto 16 mm particle board in accordance with SANS 50312.

The seat foam shall be 23 kg/m^3 minimum and the back foam shall be 16 kg/m^3 minimum. The upholstery shall be in accordance with SANS 1324 (100 % polypropylene in accordance with contract quality standards).

The stackable steel frame assembly shall be made from 22 mm square tubing in accordance with SANS 657-4, with a baked epoxy or polyester coating finish in accordance with SANS 1274.

The legs of the chair shall be fitted with acceptable plugs.

Figure C.3 — Upholstered teacher's chair without armrests

Amdt 2

©SABS. Licensed exclusively to Stephen Shole; License ID : B2S3-3T8G-LXOL.
Copying and network storage prohibited.
You can make one paper copy of the standard; No paper copy may be photocopied or reproduced in any way.

Dimensions in millimetres

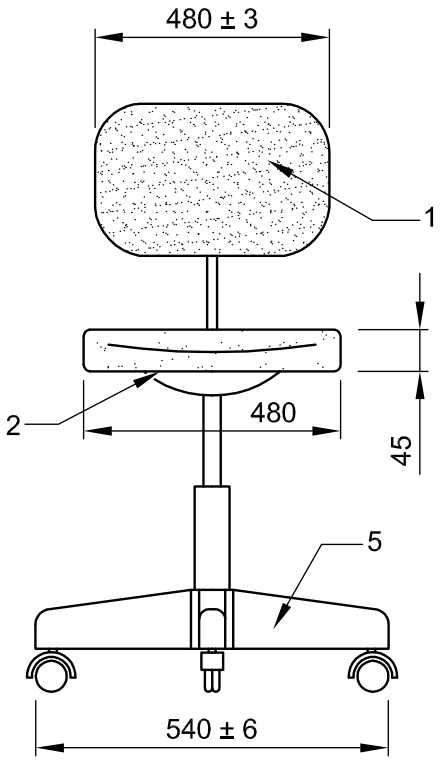

a) Front view

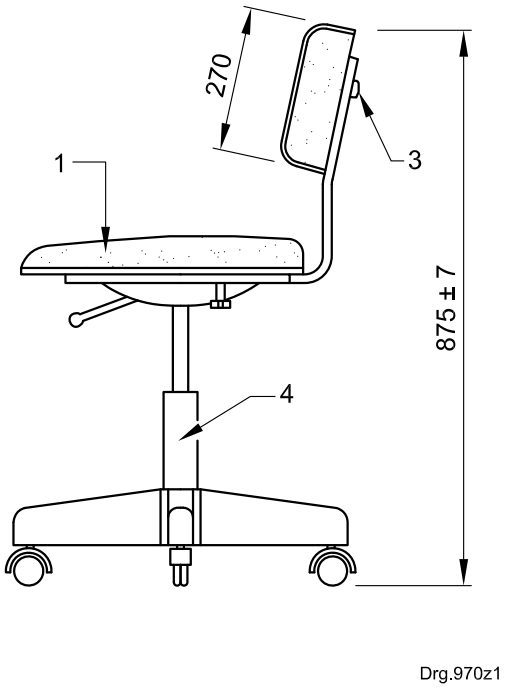

b) Side view

Key

1 seat and back foam
2 acceptable screws that fit the seat to the steel frame
3 bolts and nuts that fix the back of the seat to the steel frame
4 spindle
5 nylon base

The foam shall be in accordance with SANS 883, and shall be glued onto approximately 11 mm shaped plywood in accordance with SANS 929.

The seat foam shall be 23 kg/m^3 minimum and the back foam shall be 16 kg/m^3 minimum. The upholstery shall be in accordance with SANS 1324 (100 % polypropylene in accordance with contract quality standards).

The spindle shall be of adjustable gas height.

The nylon base shall be reinforced with durable castors in accordance with SANS 1292.

Figure C.4 — Typist chair

Amdt 2

©SABS. Licensed exclusively to Stephen Shole; License ID : B2S3-3T8G-LXOL.
Copying and network storage prohibited.
You can make one paper copy of the standard; No paper copy may be photocopied or reproduced in any way.

Dimensions in millimetres

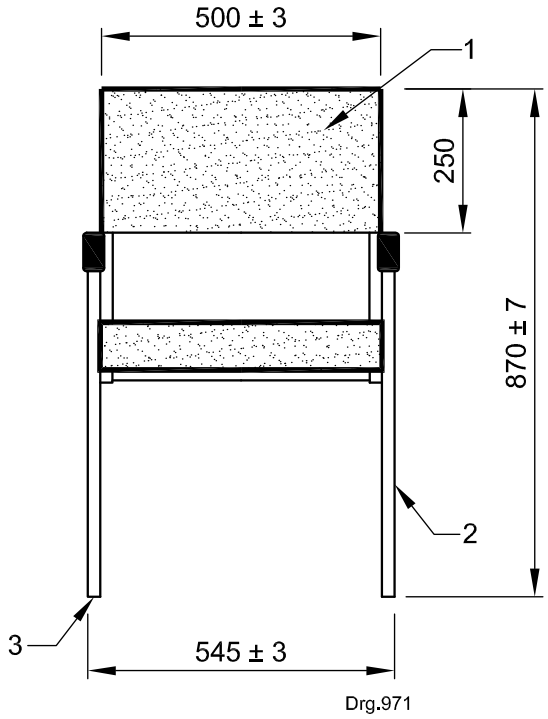

a) Front view

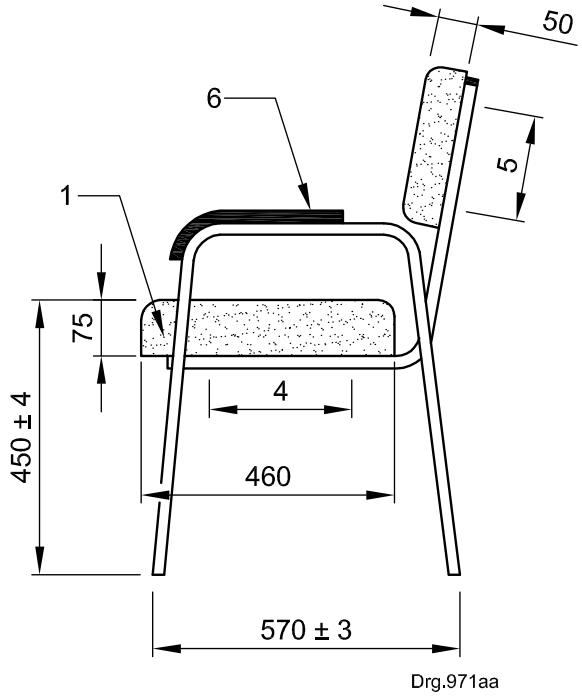

b) Side view

Key

1 seat and back foam
2 stackable steel frame
3 acceptable plug
4 acceptable screws that fit the seat to the steel frame
5 bolts and nuts that fix the back of the seat to the steel frame
6 acceptable armrest

The seat foam shall be 23 kg/m^3 minimum and the back foam shall be 16 kg/m^3 minimum. The upholstery shall be in accordance with SANS 1324 (100 % polypropylene in accordance with contract quality standards).

The stackable steel frame assembly shall be made from 22 mm square tubing in accordance with SANS 657-4, with a baked epoxy or polyester coating finish in accordance with SANS 1274.

The legs of the chair shall be fitted with acceptable plugs.

Figure C.5 — Upholstered side chair

Amdt 2

©SABS. Licensed exclusively to Stephen Shole; License ID : B2S3-3T8G-LXOL.
Copying and network storage prohibited.
You can make one paper copy of the standard; No paper copy may be photocopied or reproduced in any way.

Dimensions in millimetres

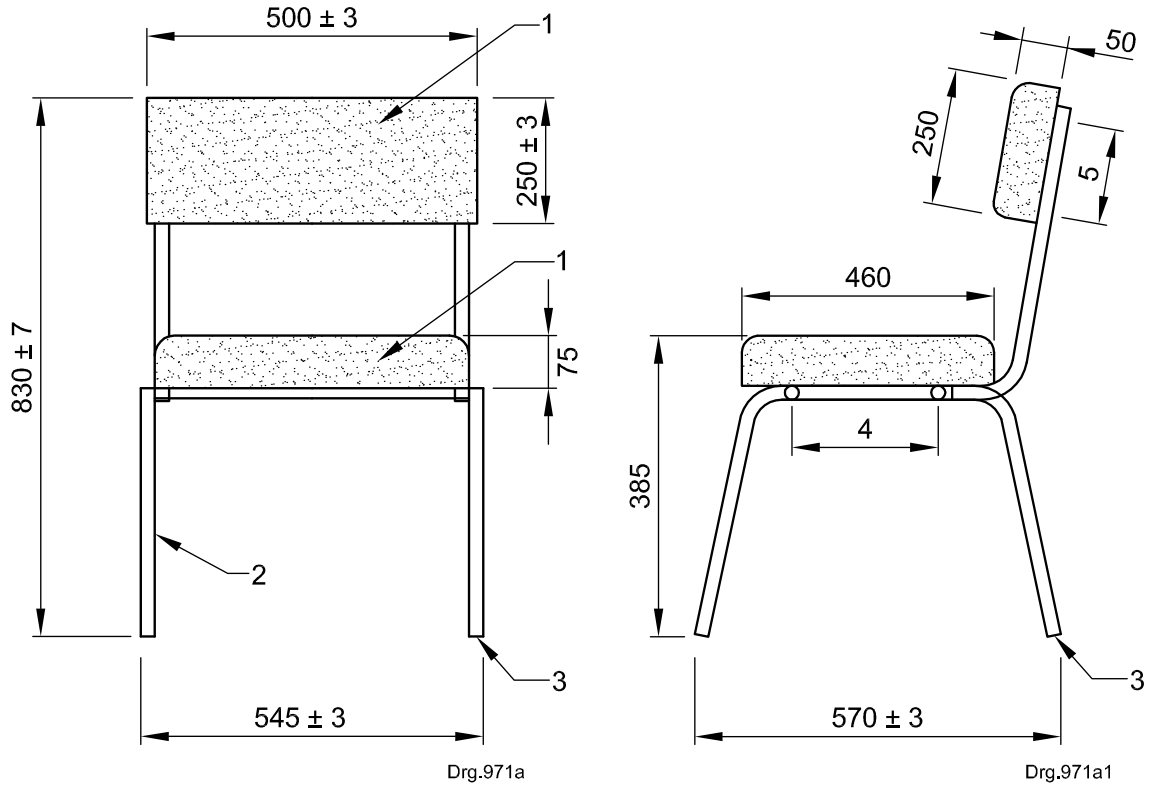

a) Front view **b) Side view**

Key

1 seat and back foam
2 stackable steel frame
3 acceptable plug
4 acceptable screws that fit the seat to the steel frame
5 bolts and nuts that fix the back of the seat to the steel frame

The foam shall be in accordance with SANS 883, and shall be glued onto 16 mm particle board in accordance with SANS 50312.

The seat foam shall be 23 kg/m^3 minimum and the back foam shall be 16 kg/m^3 minimum. The upholstery shall be in accordance with SANS 1324 (100 % polypropylene in accordance with contract quality standards).

The stackable steel frame assembly shall be made from 22 mm square tubing in accordance with SANS 657-4, with a baked epoxy or polyester coating finish in accordance with SANS 1274.

The legs of the chair shall be fitted with acceptable plugs.

Figure C.6 — Side chair without armrests

Amdt 2

©SABS. Licensed exclusively to Stephen Shole; License ID : B2S3-3T8G-LXOL.
Copying and network storage prohibited.
You can make one paper copy of the standard; No paper copy may be photocopied or reproduced in any way.

Dimensions in millimetres

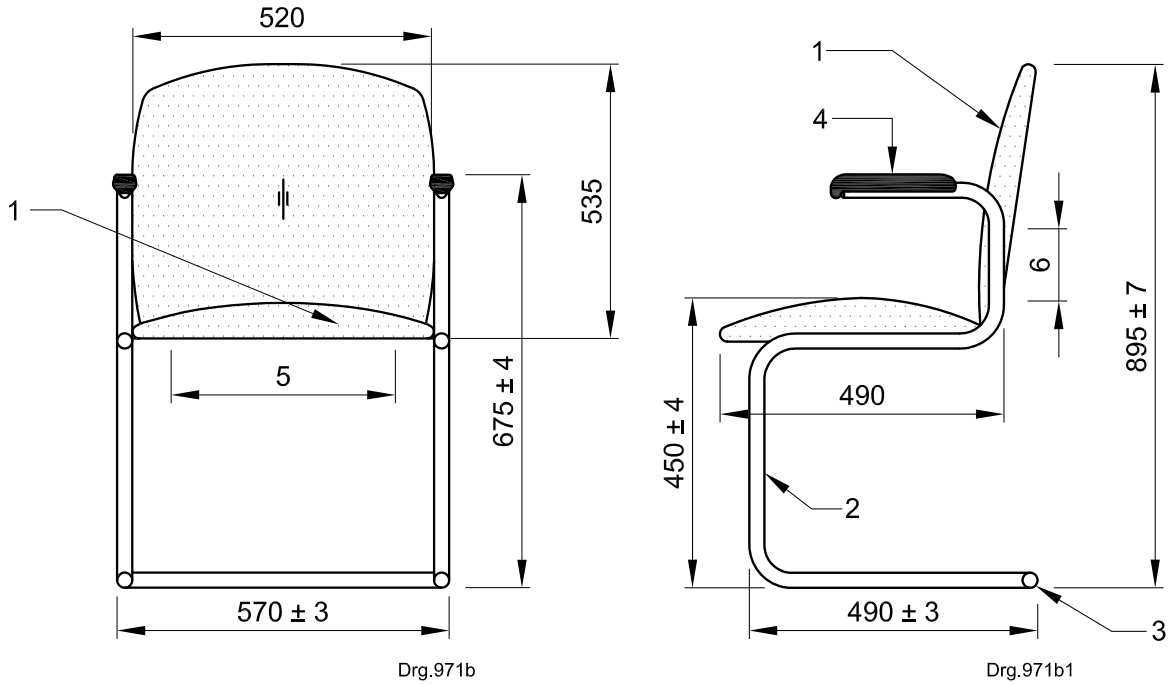

a) Front view **b) Side view**

Key

1 seat and back foam
2 stackable steel frame
3 acceptable plug
4 acceptable armrest
5 bolts and T-nuts that fix the seat to the steel frame
6 bolts and T-nuts that fix the back of the seat to the steel frame

The foam shall be in accordance with SANS 883, and the foam shall be glued onto approximately 11 mm ergonomically shaped plywood in accordance with SANS 929.

The seat shall be 50 mm thick with a seat filling of 16 kg/m^3. The upholstery shall be in accordance with SANS 1324 (100 % polypropylene in accordance with contract quality standards).

The steel frame sleigh base shall be made from ø 25,4 mm × 2,5 mm tubing in accordance with SANS 657-4, with a baked epoxy or polyester coating finish in accordance with SANS 1274.

The legs of the chair shall be fitted with acceptable plugs.

Figure C.7 — Sleigh base side chair

Amdt 2

©SABS. Licensed exclusively to Stephen Shole; License ID : B2S3-3T8G-LXOL.
Copying and network storage prohibited.
You can make one paper copy of the standard; No paper copy may be photocopied or reproduced in any way.

Dimensions in millimetres

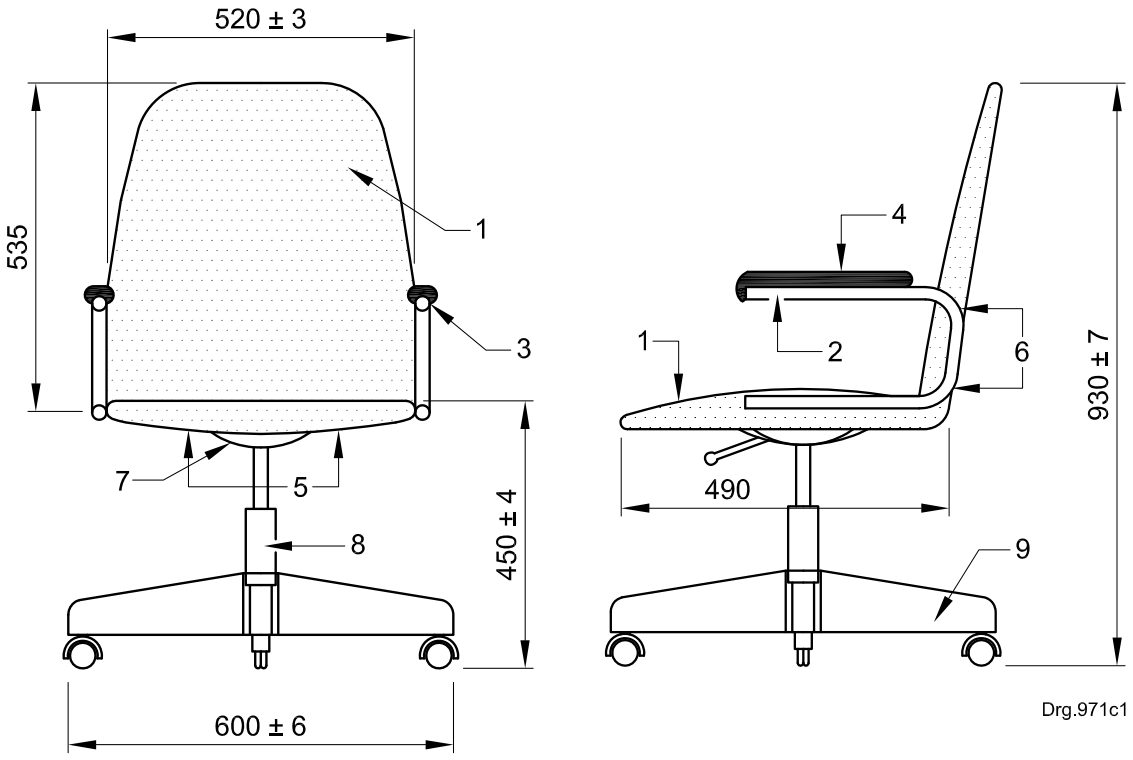

a) Front view **b) Side view**

Key

1 seat and back foam
2 steel frame
3 acceptable plug
4 acceptable armrest
5 bolts and T-nuts that fix the seat to the steel frame
6 bolts and T-nuts that fix the back of the seat to the steel frame
7 swivel and tilt mechanism
8 gas height adjustable spindle
9 nylon base

The foam shall be in accordance with SANS 883, and shall be glued onto approximately 11 mm ergonomically shaped plywood in accordance with SANS 929.

The seat shall be 50 mm thick with a seat filling of 23 kg/m^3. The back shall be 40 mm thick with a back filling of 16 kg/m^3 minimum. The upholstery shall be in accordance with SANS 1324 (100 % polypropylene in accordance with contract quality standards).

The steel frame shall be made from 25,4 mm tubing in accordance with SANS 657-4, with a baked epoxy or polyester coating finish in accordance with SANS 1274.

The legs of the chair shall be fitted with acceptable plugs.

The chair shall be fitted with a five-star reinforced base with durable castors in accordance with SANS 1292.

Figure C.8 — Low back swivel and tilt chair

Amdt 2

©SABS. Licensed exclusively to Stephen Shole; License ID : B2S3-3T8G-LXOL.
Copying and network storage prohibited.
You can make one paper copy of the standard; No paper copy may be photocopied or reproduced in any way.

Dimensions in millimetres

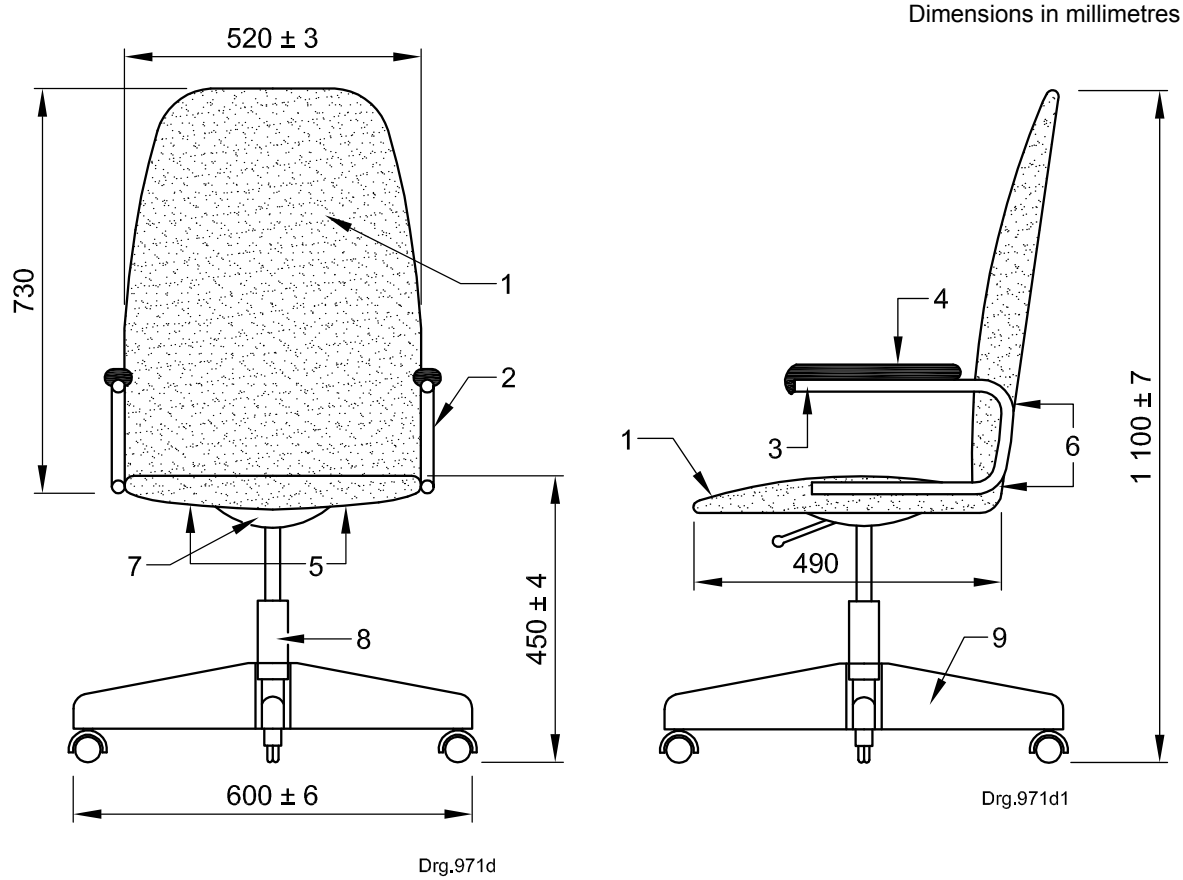

a) Front view **b) Side view**

Key

1 seat and back foam
2 steel frame
3 acceptable plug
4 acceptable armrest
5 bolts and T-nuts that fix the seat to the steel frame
6 bolts and T-nuts that fix the back of the seat to the steel frame
7 swivel and tilt mechanism
8 gas height-adjustable spindle
9 nylon base

The foam shall be in accordance with SANS 883, and shall be glued onto approximately 11 mm ergonomically shaped plywood in accordance with SANS 929.

The seat shall be 50 mm thick with a seat filling of 23 kg/m^3. The back shall be 40 mm thick with a back filling of 16 kg/m^3 minimum. The upholstery shall be in accordance with SANS 1324 (100 % polypropylene in accordance with contract quality standards).

The steel frame shall be made from ø 25,4 mm tubing in accordance with SANS 657-4, with a baked epoxy or polyester coating finish in accordance with SANS 1274.

The legs of the chair shall be fitted with acceptable plugs.

The chair shall be fitted with a five-star reinforced base with durable castors in accordance with SANS 1292.

Figure C.9 — High back swivel and tilt chair

Amdt 2

©SABS. Licensed exclusively to Stephen Shole; License ID : B2S3-3T8G-LXOL.
Copying and network storage prohibited.
You can make one paper copy of the standard; No paper copy may be photocopied or reproduced in any way.

Bibliography **Amdt 2**

~~SABS 631, *Decorative oil gloss paint for interior and exterior use*.~~ **Amdt 1**

~~SABS 782, *Primer for baking enamels*.~~ **Amdt 1**

~~SABS 783, *Baking enamels*.~~ **Amdt 1**

SANS 135/ISO 1456, *Metallic and other inorganic coatings – Electrodeposited coatings of nickel, nickel plus chromium, copper plus nickel and of copper plus nickel plus chromium.* **Amdt 1**

SANS 540-1, *Fibreboard products – Part 1: Uncoated fibreboard.* **Amdt 1**

SANS 540-2, *Fibreboard products – Part 2: Coated fibreboard.* **Amdt 1**

SANS 630, *Decorative high gloss enamel paints.*

SANS 641, *Flexible polyurethane (polyester) foams.*

SANS 642, *Reconstituted flexible polyurethane foams.*

SANS 678, *Primers for wood.*

SANS 681, *Undercoats for paints.*

SANS 820, *Mild steel nails.*

SANS 887, *Varnish for interior use.*

SANS 1099, *Hardwood furniture timber.*

SANS 1171, *Metal screws for wood.*

~~SANS 1349, *Phenolic, aminoplastic and one-part polyurethane resin adhesives for the laminating and finger-jointing of timber, and for furniture and joinery*.~~ **Amdt 2**

SANS 1407, *Anodized coatings on aluminium (for general applications).*

SANS 1460, *Laminated timber (glulam).*

SANS 1783-1, *Sawn softwood timber – Part 1: General requirements.* **Amdt 1**

SANS 1783-3, *Sawn softwood timber – Part 3: Industrial timber.* **Amdt 1**

SANS 4586-2/ISO 4586-2 (SABS ISO 4586-2), *High-pressure decorative laminates – Sheets made from thermosetting resins – Part 2: Determination of properties.* **Amdt 1**

SANS 9001/ISO 9001, *Quality management systems – Requirements.* **Amdt 1**

© SABS

©SABS. Licensed exclusively to Stephen Shole; License ID : B2S3-3T8G-LXOL.
Copying and network storage prohibited.
You can make one paper copy of the standard; No paper copy may be photocopied or reproduced in any way.

This page has been left blank intentionally

©SABS. Licensed exclusively to Stephen Shole; License ID : B2S3-3T8G-LXOL.
Copying and network storage prohibited.
You can make one paper copy of the standard; No paper copy may be photocopied or reproduced in any way.

SABS – Standards Division

The objective of the SABS Standards Division is to develop, promote and maintain South African National Standards. This objective is incorporated in the Standards Act, 2008 (Act No. 8 of 2008).

Amendments and Revisions

South African National Standards are updated by amendment or revision. Users of South African National Standards should ensure that they possess the latest amendments or editions.

The SABS continuously strives to improve the quality of its products and services and would therefore be grateful if anyone finding an inaccuracy or ambiguity while using this standard would inform the secretary of the technical committee responsible, the identity of which can be found in the foreword.

The SABS offers an individual notification service, which ensures that subscribers automatically receive notification regarding amendments and revisions to South African National Standards.
Tel: +27 (0) 12 428 6883 Fax: +27 (0) 12 428 6928 E-mail: sales@sabs.co.za

Buying Standards

Contact the Sales Office for South African and international standards, which are available in both electronic and hard copy format.
Tel: +27 (0) 12 428 6883 Fax: +27 (0) 12 428 6928 E-mail: sales@sabs.co.za
South African National Standards are also available online from the SABS website http://www.sabs.co.za

Information on Standards

The Standards Information Centre provides a wide range of standards-related information on both national and international standards. The Centre also offers an individual updating service called INFOPLUS, which ensures that subscribers automatically receive notification regarding amendments to, and revisions of, international standards.
Tel: +27 (0) 12 428 7911 / 0861 27 7227 Fax: +27 (0) 12 428 6928 E-mail: info@sabs.co.za

Copyright

The copyright in a South African National Standard or any other publication published by the SABS Standards Division vests in the SABS or, in the case of a South African National Standard based on an international standard, in the organization from which the SABS adopted the standard under licence or membership agreement. In the latter case, the SABS has the obligation to protect such copyright. Unless exemption has been granted, no extract may be reproduced, stored in a retrieval system or transmitted in any form or by any means without prior written permission from the SABS Standards Division. This does not preclude the free use, in the course of implementing the standard, of necessary details such as symbols, and size, type or grade designations. If these details are to be used for any purpose other than implementation, prior written permission must be obtained.

Details and advice can be obtained from the Manager – Standards Sales and Information Services.
Tel: +27 (0) 12 428 6883 Fax: +27 (0) 12 428 6928 E-mail: sales@sabs.co.za