DEPARTMENT/ INSTITUTION	BID NUMBER & PROJECT DESCRIPTION	CONTACT PERSON
DEPARTMENT OF TRANSPORT **PTB No. 27**	# ADDENDUM No.1 **SCMU10-26/27-0018: CONSTRUCTION OF GALI RIVER CROSSING ON DR08592** **REASONS FOR ADDENDUM** The reasons for this addendum is to respond to queries raised and to correct material errors identified in the BOQ after publication. This contract is re-measurable. 1. Item C3.2.5.1 – Prefabricated Portal Culverts > Delete and Replace with: a) **S 3000 D 3200 W 3640 C150 TT 130 – 290 units** – Main River crossing structure as per Drawing BMK-1784-GB-001 Rev 2. Note portals to be installed 100mm apart. Supply, lay and joint complete. b) **S 1500 D 1675 W 1860 C150 TT 130 – 50 units** – Retained for re-measurement / avoid Rates Only c) **S 1800 D 1675 W 1860 C150 TT 130 – 50 units** – Retained for re-measurement / avoid Rates Only 2. Omission of Gabions – New items included, revised BOQ pages attached. **THE CLOSING DATE IS EXTENDED** **FROM 02 NOVEMBER 2026 AT 11:00** **TO 09 NOVEMBER 2026 AT 11:00**	**TECHNICAL / PROJECT ENQUIRIES** Miss A Bobo Cell no: 0776069087 Email address: Aviwe.Bobo@ectransport.gov.za Mr. ET Chiro Cell no: 0632761428 Email address: edward@bmkgroupco.com **SCM ENQUIRIES** Mr. P Nqikashe Cell no: 067 419 8001 Email address: Philasande.Nqikashe@ectransport.gov.za

ADDENDUM NO.1 – PAGE 2 OF 3 – ANNEXURES

Project: SCMU10-26/27-0018: CONSTRUCTION OF GALI RIVER CROSSING ON DR08592
Tender Bulletin: Eastern Cape Provincial Tender Bulletin No.27 26/27 FY

ANNEXURE A – OLD VERSION (SUPERSEDED)

Reference: Bill of Quantities – Item C3.2.5.1 – Prefabricated Portal Culverts (Existing Document – Before Correction)

- S1500 D 1675 W 1860 C150 TT 130 – 290 units

- S1800 D 1675 W 1860 C150 TT 130 – 50 units

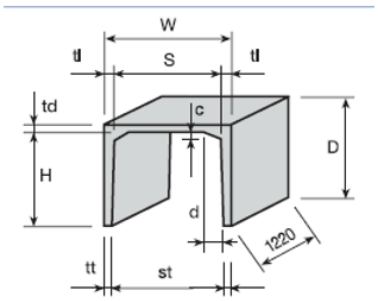

			S 1500 D 1675 W 1860 C200 TT 130	No.	290		
			S 1800 D 1675 W 1860 C200 TT 130	No.	50		

This version contained material errors and is hereby superseded in its entirety.

ANNEXURE B – NEW CORRECTED VERSION (TO BE PRICED)

Reference: Revised Bill of Quantities Item C3.2.5.1 – Prefabricated Portal Culverts (Corrected – To be priced)

Delete and Replace with:

a) S3000 D 3200 W 3640 C150 TT 130 – **290 units** – Main river crossing structure as per Drawing BMK-1784-GB-001 Rev 2. Supply, lay and joint complete.

b) S1500 D 1675 W 1860 C150 TT 130 – **50 units** – Retained for re-measurement / to avoid Rates Only.
c) S1800 D 1675 W 1860 C150 TT 130 – **50 units** – Retained for re-measurement / to avoid Rates Only.

The following revised BOQ documents are attached and form part of this Addendum:

B1 – Revised BOQ Page – Culverts

B2 – Revised BOQ Summary Page

ADDENDUM NO.1 – PAGE 3 OF 3 – ANNEXURES

ANNEXURE C – NEW ITEMS – GABIONS (TO BE PRICED)

Reference: Omission Corrected – Gabion Protection Works

New items for Gabion protection works are hereby included. Revised BOQ pages attached as:

C1 – New BOQ Pages – Gabions

IMPORTANT NOTE TO BIDDERS:

1. Pricing of All Bill Items – Bidders are required to price all items contained in the Bills of Quantities irrespective of whether such items are explicitly detailed on the tender drawings. The drawings issued at tender stage are for tender purposes only and do not constitute final construction drawings.

2. Corrected and New Items – Revised BOQ items attached as B1, B2 and C1 supersede the original BOQ items issued with the tender. Bidders must use the revised BOQ items for their submission.

CLOSING DATE EXTENSION

The closing date is extended from **02 November 2026** at **11:00** to **09 November 2026 at 11:00** to comply with Clause F2.6 – Minimum 10 days for Addendum

ANNEXURE B1

C3.2 **CULVERTS**

ITEM			DESCRIPTION	UNIT	QTY	RATE	AMOUNT
C3.2.5			**RECTANGULAR CULVERTS WITH PREFABRICATED ELEMENTS:**				
	C3.2.5.1		**Prefabricated portal culverts; wall and roof combination** *(size and type indicated)*	No			
			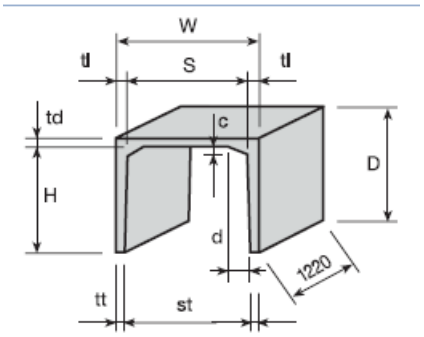				
			S 3000 D 3200 W 3640 C150 TT 130	**No**	**290**		
			S 1500 D 1675 W 1860 C150 TT 130	**No**	**50**		
			S 1800 D 1675 W 1860 C150 TT 130	**No**	**50**		
C3.2.8			Concrete backfill or encasement for culverts *(20Mpa WITH 100MM THICKNESS)*	cubic metre (m^3)	50		
			Note the Portals to be installed 100mm apart along the bridge length for reinforced concrete infill as per drawing				
TOTAL CARRIED FORWARD TO SUMMARY						R	

ANNEXURE C1

C11 **GABIONS**

ITEM			DESCRIPTION	UNIT	QTY	RATE	AMOUNT
C11	**SANS 1200DK**		**GABIONS**				
11.1	8.2		Surface preparations				
11..1	8.2.1		Surface preparation of bedding of Gabions	square metre (m^2)	800		
	8.2.2		**Gabions**				
11.2		a	Construction of gabion structures as and when instructed by the Engineer to be 2m L X 1m W x 1m H in dimension. Class A Galvanizing with 0.50mm plastic coating and 80mm x 100mm aperture or equally approved	cubic metre (m^3)	200		
11.3		b	Construction of reno mattresses with dimensions of 2m L x 1m W x 0.3H Class A Galvanizing with 0.50mm plastic coating and 60mm x 80mm aperture or equally approved	cubic metre (m^3)	200		
11..4	8.2.3		Extra over for packing selected for exposed surfaces	cubic metre (m^3)	50		
11.4	8.2.4		Geomembrane				
		a	Supply, lay bed and secure Fibretex-25 SA Geomembrane between in-situ and gabion	square metre (m^2)	850		
TOTAL CARRIED FORWARD TO SUMMARY							R

ANNEXURE B2

SUMMARY OF PRICING

CONTRACTOR'S SITE ESTABLISHMENT AND GENERAL OBLIGATIONS	
CLEARING AND GRUBBING	
EXCAVATION FOR DRAINS	
CULVERTS	
CONCRETE KERBING AND CHANNELING, BERMS, CHUTES, DOWNPIPES, AS WELL AS CONCRETE, STONE PITCHED AND GABION LININGS FOR OPEN DRAINS	
GABIONS	
FOUNDATIONS	
FALSEWORK, FORMWORK AND CONCRETE FINISH	
CONCRETE	
ANCILLARY STRUCTURAL ELEMENTS	
STRUCTURAL STEELWORK FOR MINOR STRUCTURES	
TESTING MATERIALS AND JUDGEMENT OF WORKMANSHIP	
TRAINING, COACHING, GUIDANCE, MENTORING AND ASSISTANCE	
SUB TOTAL A	
CONTRACT SKILLS DEVELOPMENT GOAL (0.25% OF SUB TOTAL A)	
SUB TOTAL B	
Add Contingencies (add 5%)	
Add Provision for Escalation (10%) **Escalation shall be calculated month on month**	
SUB TOTAL	
ADD 15% VAT	
TOTAL CARRIED TO C.1.1: FORM OF OFFER	

SIGNED BY TENDERER	DATE