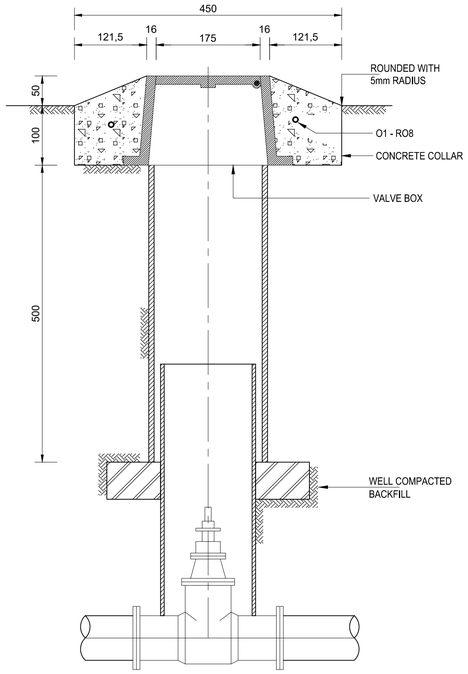

SECTION A
SCALE 1 : 5

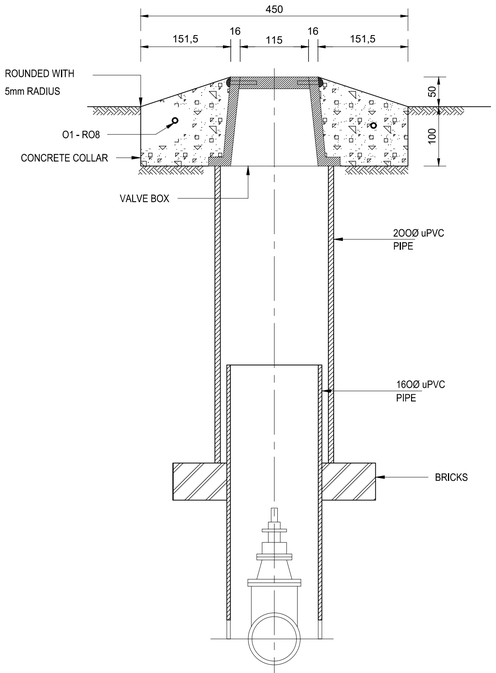

SECTION B
SCALE 1 : 5

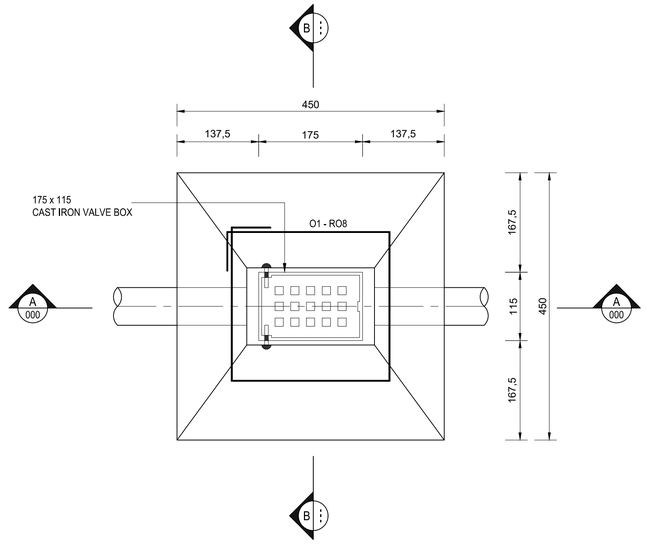

PLAN
SCALE 1 : 5

CAST IRON VALVE
BOX DETAILS

NOTES:

1. VALVE BOXES AND CONCRETE COLLARS MUST BE PAINTED WITH PLASCON TP 24 (WHITE) PAINT.
2. WHERE VALVE BOXES OCCUR A 400 x 400 WHITE BLOCK WITH ROAD PAINT MUST BE PAINTED ON THE KERB.
3. THE LETTER V IS TO BE FORMED IN THE CONCRETE KERB BEFORE IT HAS SET, TO IDENTIFY THE POSITION OF THE VALVE BOX.
4. BOX LENGTH TO BE PLACED IN THE DIRECTION OF THE PIPE.
5. CONCRETE STRENGTH - 20 MPa (28 DAYS)
   CONCRETE COVER - 50mm.
6. WHERE THE VALVE BOX IS PLACED IN THE ROAD OR PAVEMENT, THE TOP OF THE CONCRETE COLLAR MUST BE FLAT.

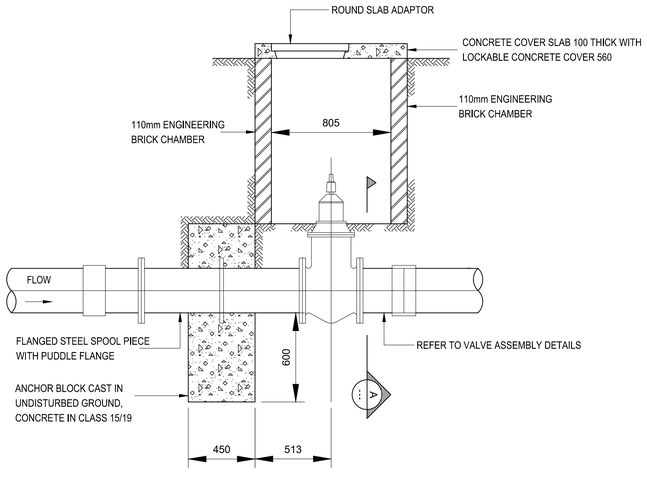

TYPICAL SECTION
N.T.S

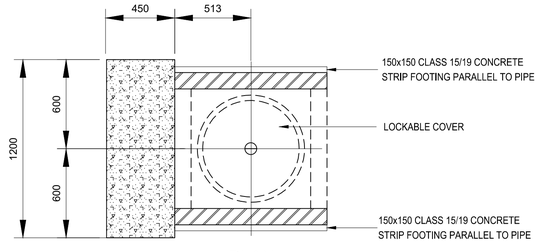

PLAN
N.T.S

VALVE BOX TYPE 2

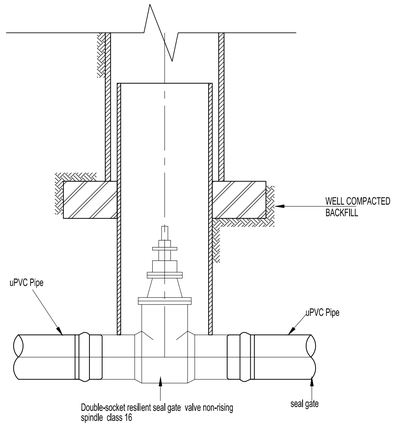

VALVE
DOUBLE-SOCKETED PIPE ARRANGEMENT
SCALE 1 : 5

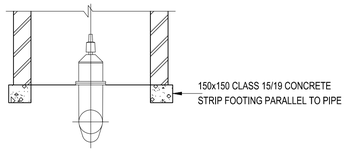

SECTION A
SCALE 1:20

PIPE SCHEDULE

POSITION: ISOLATION VALVE ASSEMBLY

ITEM	AMOUNT	DESCRIPTION	DIMENSION (N.T.S)
①	2	100mmØ VICTAULIC STYLE 997 TRANSITION COUPLING	STANDARD
②	2	100mmØ MS SPOOL,ONE END FLANGED TO SABS 1123, OTHER END SUITABLE FOR COUPLING	100Ø, 225
③	1	100mmØ FLANGE RESILIENT SEAL GATE VALVE TO SABS 664 WITH NON RISING SPINDLE ANTI-CLOCKWISE CLOSING	100Ø, 254
④	1	100mmØ MS SPOOL PIPE FLANGED TO SABS 1123 WITH PUDDLE FLANGE IN POSITION AS INDICATED	550, 100Ø, 800

PVCu PIPES

DIAMETER (mm)	STANDARD LENGTH (m)
110mm	6m

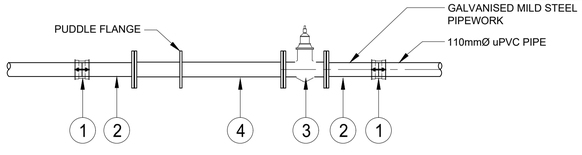

VALVE ASSEMBLY DETAILS
N.T.S

NOTES

a) VALVES

1) RESILIENT SEAL GATE VALVE
2) NON RISING SPINDLE
3) ANTI CLOCKWISE CLOSING
4) A REMOVABLE COUPLING MUST BE PROVIDED AT ONE SIDE OF THE VALVE AT LEAST 500 mm FROM THE SHAFT.

SPECIFICATIONS TO SABS 664

b) PRECAST SEGMENT SPECIFICATIONS

1) ALL MANHOLE SEGMENTS ACCORDING TO SABS 1294-1981
2) TOP SURFACE OF MANHOLE COVER TO BE 50 mm ABOVE THE FINISHED GROUND LEVEL EXCEPT IN PAVED AREAS
3) SEGMENTS TO BE BONDED WITH 1:3 CEMENT MORTAR TO PROVIDE A WATERTIGHT JOINT
4) DIMENSIONS OF SEGMENTS FOR VALVES BIGGER THAN 300 DIA. MUST BE ADAPTED TO FIT VALVE SIZE.

ISSUED FOR TENDER

CURRENT DRAWING ISSUED TO:
CLIENT

CLIENT:

Northern Cape
Department of Education

Pvt Bag X5049,
Kimberly, 8301,
South Africa

IK Nkoane Education House
156 Barkly Road
Homestead, Kimberly
8301

REV	DATE	BY	DESCRIPTION	CHK	APD
00	26-05-2026	L.M	ISSUED FOR TENDER	N.Z	W.K

DRAWING STATUS:
DETAILED DESIGN

Kairos
engineers & infrastructure developers

10 MORRIS STREET WEST
WOODMEAD, SANDTON, 2191, JOHANNESBURG
www.kairosengineers.co.za

Tel: 010 824 00060

CLIENT:
HOERSKOOL ADAMANTIA HIGH SCHOOL

ARCHITECT:
R.Kakono PrArch 48791029

PROJECT:
PROJECT: Rehabilitation and Construction of Additional Block Classrooms at Hoerskool Adamantia High School, in Kimberly Northern Cape

TITLE:
WATER VALVES TYPICAL DETAILS

STAND/ERF No.: ERF ...

SCALE @ A1:	CHECKED:	APPROVED:
1:50	N.Z	W.K
DRAWN:	DESIGNED:	DATE:
L.M	W.K	26/05/2026

PROJECT No:	DRAWING No:	REV:
K250022	K250022-CIV-002	00

©KAIROS CONSULTING ENGINEERS