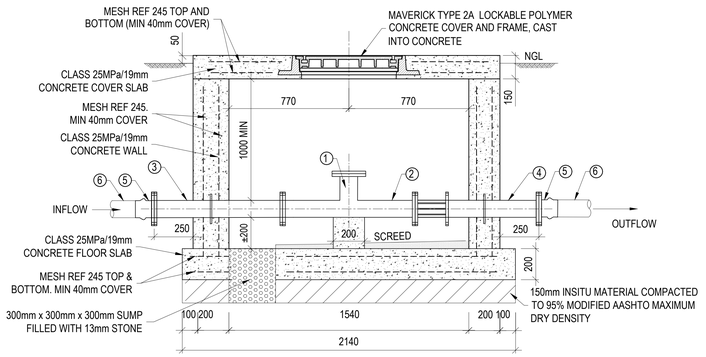

SECTION A-A: NON-RETURN VALVE CHAMBER

SCALE 1:20

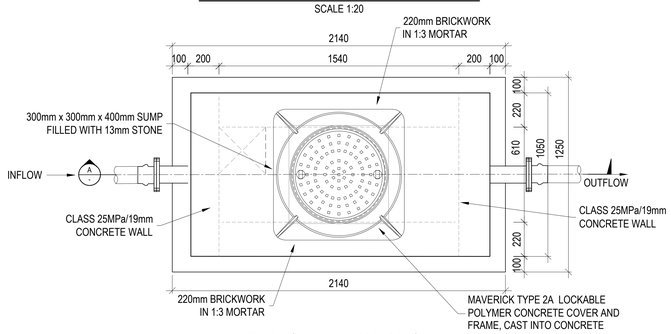

PLAN VIEW: NON-RETURN VALVE CHAMBER

SCALE 1:20

TYPICAL NON-RETURN VALVE CHAMBER DETAIL

(FOR 250mm AND 315mm DIAMETER PIPES)

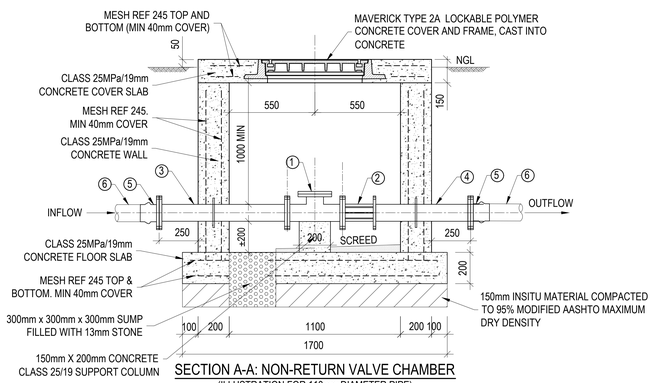

SECTION A-A: NON-RETURN VALVE CHAMBER

(ILLUSTRATION FOR 110mm DIAMETER PIPE)

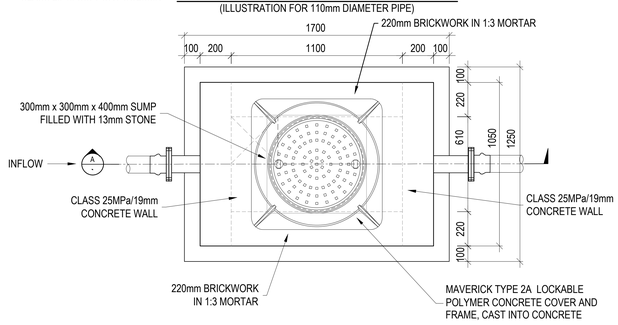

PLAN VIEW: NON-RETURN VALVE CHAMBER

(ILLUSTRATION FOR 110mm DIAMETER PIPE)

TYPICAL NON-RETURN VALVE CHAMBER DETAIL

(FOR 110mm, 160mm AND 200mm DIAMETER PIPES)

SCALE 1:20

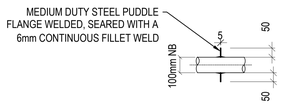

DETAIL OF PUDDLE FLANGE

SCALE 1:20

LEGEND (NON-RETURN VALVE CHAMBER) - 250mm DIAMETER PIPES:

1. 250mm FLANGED NON-RETURN-VALVE (AVK OR SIMILAR APPROVED).
2. 250mm VIKING JOHNSON FLANGED ADAPTOR.
3. 250mm NB FLANGED MEDIUM DUTY STEEL PIPE, 807.5mm FACE TO FACE WITH PUDDLE FLANGE 350mm FROM ONE FACE, CAST INTO WALL.
4. 250mm NB MEDIUM DUTY STEEL PIPE, 911mm LONG, FLANGED ONE END ONLY, WITH PUDDLE FLANGE 350mm FROM FLANGED END, CAST INTO WALL.
5. 250mm FLANGE ADAPTOR FOR uPVC PIPES (CAST IRON).
6. 250mm uPVC PIPES.

LEGEND (NON-RETURN VALVE CHAMBER) - 315mm DIAMETER PIPES:

1. 315mm FLANGED NON-RETURN-VALVE (AVK OR SIMILAR APPROVED).
2. 315mm VIKING JOHNSON FLANGED ADAPTOR.
3. 300mm NB FLANGED MEDIUM DUTY STEEL PIPE, 770mm FACE TO FACE WITH PUDDLE FLANGE 350mm FROM ONE FACE, CAST INTO WALL.
4. 300mm NB MEDIUM DUTY STEEL PIPE, 936mm LONG, FLANGED ONE END ONLY, WITH PUDDLE FLANGE 350mm FROM FLANGED END, CAST INTO WALL.
5. 315mm FLANGE ADAPTOR FOR uPVC PIPES (CAST IRON).
6. 315mm uPVC PIPES.

LEGEND (NON-RETURN VALVE CHAMBER) - 110mm DIAMETER PIPES:

1. 110mm FLANGED NON-RETURN-VALVE (AVK OR SIMILAR APPROVED).
2. 110mm VIKING JOHNSON FLANGED ADAPTOR.
3. 100mm NB FLANGED MEDIUM DUTY STEEL PIPE, 822.5mm FACE TO FACE WITH PUDDLE FLANGE 350mm FROM ONE FACE, CAST INTO WALL.
4. 100mm NB MEDIUM DUTY STEEL PIPE, 836mm LONG, FLANGED ONE END ONLY, WITH PUDDLE FLANGE 350mm FROM FLANGED END, CAST INTO WALL.
5. 110mm FLANGE ADAPTOR FOR uPVC PIPES (CAST IRON).
6. 110mm uPVC PIPES.

LEGEND (NON-RETURN VALVE CHAMBER) - 160mm DIAMETER PIPES:

1. 160mm FLANGED NON-RETURN-VALVE (AVK OR SIMILAR APPROVED).
2. 160mm VIKING JOHNSON FLANGED ADAPTOR.
3. 150mm NB FLANGED MEDIUM DUTY STEEL PIPE, 812.5mm FACE TO FACE WITH PUDDLE FLANGE 350mm FROM ONE FACE, CAST INTO WALL.
4. 150mm NB MEDIUM DUTY STEEL PIPE, 826mm LONG, FLANGED ONE END ONLY, WITH PUDDLE FLANGE 350mm FROM FLANGED END, CAST INTO WALL.
5. 160mm FLANGE ADAPTOR FOR uPVC PIPES (CAST IRON).
6. 160mm uPVC PIPES.

LEGEND (NON-RETURN VALVE CHAMBER) - 200mm DIAMETER PIPES:

1. 200mm FLANGED NON-RETURN-VALVE (AVK OR SIMILAR APPROVED).
2. 200mm VIKING JOHNSON FLANGED ADAPTOR.
3. 200mm NB FLANGED MEDIUM DUTY STEEL PIPE, 812.5mm FACE TO FACE WITH PUDDLE FLANGE 350mm FROM ONE FACE, CAST INTO WALL.
4. 200mm NB MEDIUM DUTY STEEL PIPE, 866mm LONG, FLANGED ONE END ONLY, WITH PUDDLE FLANGE 350mm FROM FLANGED END, CAST INTO WALL.
5. 200mm FLANGE ADAPTOR FOR uPVC PIPES (CAST IRON).
6. 200mm uPVC PIPES.

NON-RETURN VALVE CHAMBER - NOTES:

STRUCTURE:

1. BRICKWORK SHALL BE 230mm THICK
2. ALL BRICKWORK SHALL BE LAID IN STRETCHER BOND.
3. ALL BRICKS SHALL BE HARD BURNT CLAY UNITS ENGINEERING GRADE BRICKS TO SABS 227 MASONRY NFE14 - COLOUR TO BE APPROVED BY THE ENGINEER.

PIPEWORK:

1. ALL UNDERGROUND STEEL PIPEWORK, SPECIALS AND FITTINGS SHALL BE WRAPPED WITH DENSO TAPE AFTER APPLYING A LAYER OF DENSO PASTE IN ORDER TO FILL ALL VOIDS.
2. ALL FLANGES SHALL BE DRILLED TO SABS 1123/1600/3 AND ALL BOLTS, NUTS AND WASHERS SHALL BE STAINLESS STEEL GRADE 316 AND SHALL COMPLY WITH EN ISO 3506-A4.
3. GASKETS SHALL BE 3mm RUBBER INSERTION GASKETS AND COVER THE FULL FACE OF FLANGE.
4. ALL STEEL AND CAST IRON PIPES, VALVES, SPECIALS AND FITTINGS SHALL BE RILSAN COATED BY AN APPROVED APPLICATOR.
5. ALL STEEL PIPES AND FITTINGS UP TO 150mmNB SHALL BE MEDIUM DUTY STEEL PIPES TO SABS 62 WITH HEAVY DUTY GALVANIZING AND PROTECTIVE COATINGS, AND SHALL BE FLANGED.
6. ONLY GRADE 316-A4 STAINLESS STEEL BOLTS, NUTS AND WASHERS SHALL BE USED.

THIS DRAWING IS THE PROPERTY OF FLUX/SDM CONSULTING ENGINEERS (Pty) Ltd. AND MAY NOT BE COPIED OR REPRODUCED EITHER WHOLLY OR IN PART WITHOUT THE WRITTEN PERMISSION OF THE AFOREMENTIONED COMPANY

THIS DRAWING IS NOT TO BE SCALED. FIGURED DIMENSIONS ONLY ARE TO BE FOLLOWED. ADDITIONAL DIMENSIONS, WHEN REQUIRED, WILL BE PROVIDED UPON REQUEST. CONTRACTORS ARE TO CHECK ALL DIMENSIONS BEFORE WORK COMMENCES AND REFER ANY DISCREPANCY TO THE ENGINEER FOR ADJUSTMENTS.

DRAWING No.	REFERENCE DRAWINGS :

0	NOV 2025	ISSUED FOR TENDER	B.S.
NO.	DATE	REVISION	DRAWN

FOR TENDER

CLIENT

UMKHANYAKUDE DISTRICT MUNICIPALITY
KINGFISHER ROAD
MKUZE
3965
TEL: (035) 573 8600
FAX: (035) 573 1094

CONSULTING ENGINEERS

2 NCONDO PLACE
RIDGESIDE DRIVE
UMHLANGA RIDGE
DURBAN
4320
TEL: 031 101 3217

PROJECT

KWAJOBE COMMUNITY WATER SUPPLY SCHEME: PHASE 1

DRAWING TITLE

NON-RETURN VALVE DETAIL

	SIGNATURE FOR FLUX/SDM	DATE	PR.No.	SHEET SIZE
DESIGNED	B.S	SEP 2025		A1
DRAWN	B.S	SEP 2025		SCALE: AS SHOWN
CHECKED	N.N	SEP 2025		
APPROVED	N.N	SEP 2025		DWG STATUS: P (P = PRELIMINARY, C = CONSTRUCTION)
CO-ORDINATOR				

FLUX/S.D.M. DRAWING NUMBER

UKDM/STD/420

REVISION No: 0

FLUX/SDM-DRAWING No.

COPYRIGHT RESERVED

C:\Users\User\OneDrive - Flux Development Scientists\Documents\01. Flux\02. Umkhanyakude DM\01. Kwajobe CWSS\03. Drawings\02. Tender Drawings\DWG\Non-Return Valve.dwg